Argyle sweater vest

M, to fit bust 37 in (94 cm) · US terms



Finished size
About 40 in (101.5 cm) at the bust and about 25½ in (65 cm) long
To fit a bust of 37 in (94 cm)

Skill
Intermediate
Basic stitches, color changes inside the rows, shaping, seams and surface slip stitch

Yarn
Light (3), 4 colors

Hook
4.5 mm (US 7)

Gauge
16 stitches and 13½ rows to 4 in (10 cm)
In half double crochet.

You will need

Yarn A: navy, main	**about 975 yd (892 m), an estimate**
Yarn B: smoke gray, contrast	**about 95 yd (87 m), an estimate**
Yarn C: brick, color 3	**about 95 yd (87 m), an estimate**
Yarn D: cream, color 4	**about 35 yd (32 m), an estimate**

Hook: 4.5 mm (US 7), or the size that gives you the gauge. Also: yarn needle, scissors, tape measure and stitch markers.

To find how many balls: divide by the length on your yarn's label and round up. Buy them from one dye lot. The estimate is from the stitches of this size at this gauge.

Sizes

Size	To fit bust	Bust	Length from the shoulder	Armhole depth, before the band	Across the front above the armholes	Back neck	Yarn, an estimate
XS	29 in (73.5 cm)	32 in (81.5 cm)	22½ in (57 cm)	7 in (18 cm)	13½ in (34.5 cm)	6 in (15 cm)	about 890 yd (814 m)
S	33 in (84 cm)	36 in (91.5 cm)	23¾ in (60.5 cm)	7¾ in (19.5 cm)	13½ in (34.5 cm)	6 in (15 cm)	about 1,030 yd (942 m)
M (this file)	**37 in (94 cm)**	**40 in (101.5 cm)**	**25½ in (65 cm)**	**8¼ in (21 cm)**	**15 in (38 cm)**	**6½ in (16.5 cm)**	**about 1,200 yd (1,097 m)**
L	41 in (104 cm)	44 in (112 cm)	26 in (66 cm)	9 in (23 cm)	16½ in (42 cm)	6½ in (16.5 cm)	about 1,360 yd (1,244 m)

For your own crochet, gifts and handmade pieces you sell. Do not resell or share this PDF or copies of it.

1X	45 in (114.5 cm)	48 in (122 cm)	26¾ in (68 cm)	9½ in (24 cm)	16½ in (42 cm)	7 in (18 cm)	about 1,470 yd (1,344 m)
2X	49 in (124.5 cm)	52 in (132 cm)	27¼ in (69 cm)	10 in (25.5 cm)	18 in (45.5 cm)	7 in (18 cm)	about 1,600 yd (1,463 m)
3X	53 in (134.5 cm)	56 in (142 cm)	27¼ in (69 cm)	10 in (25.5 cm)	18 in (45.5 cm)	7½ in (19 cm)	about 1,695 yd (1,550 m)
4X	57 in (145 cm)	60 in (152.5 cm)	28½ in (72.5 cm)	10¾ in (27.5 cm)	18 in (45.5 cm)	7½ in (19 cm)	about 1,850 yd (1,692 m)
5X	61 in (155 cm)	64 in (162.5 cm)	29 in (73.5 cm)	11¼ in (28.5 cm)	19½ in (49.5 cm)	8 in (20.5 cm)	about 1,995 yd (1,824 m)

Schematic

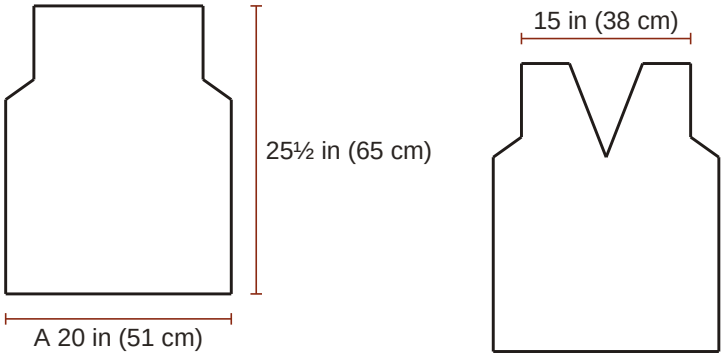

Back
A half the bust

Front

Abbreviations

Written in US terms. Where the UK name differs it is given beside the US one.

sc single crochet (UK dc, double crochet)
hdc half double crochet (UK htr, half treble)
sl st slip stitch (UK ss, slip stitch)
ch chain stitch
RS right side
Rnd round
st stitch
back loop only under the one loop of the stitch that is farther from you

Special stitches

sc2tog (single crochet 2 stitches together (UK double crochet 2 together)): Insert the hook in the next stitch and pull up a loop, insert the hook in the following stitch and pull up a loop (3 loops on the hook); yarn over and pull through all 3 loops. It leaves 1 sc2tog for the next row or round.

hdc2tog (half double crochet 2 stitches together (UK half treble 2 together)): [yarn over, insert the hook in the next stitch and pull up a loop] twice (5 loops on the hook); yarn over and pull through all 5 loops. It leaves 1 hdc2tog for the next row or round.

For your own crochet, gifts and handmade pieces you sell. Do not resell or share this PDF or copies of it.

Gauge

16 stitches and 13½ rows to 4 in (10 cm) in half double crochet.

> **The swatch.** A test piece to measure and pull out. It is not the start of the pattern. Ch 25; begin in the 2nd ch from the hook and work 20 rows of half double crochet on 24 sts, about 6 in (15 cm) wide and 6 in (15 cm) high, and measure 4 in (10 cm) in the middle. Use a larger hook if your swatch is small, a smaller one if it is large. Ribs: worked sideways, 17 rows and 16 sts to 4 in (10 cm), so a rib of 10 sts is about 2½ in (6.5 cm) deep. Bands: 16 sts and 18.5 rounds to 4 in (10 cm) in single crochet (UK: double crochet).

Before you start

- The finished bust is 3 in (7.5 cm) wider than the body measurement at each size. Choose by the finished measurement you like; no fit is promised beyond the measurements given.
- The turning chain (ch 1 for single and half double crochet) never counts as a stitch. Work the first stitch of every row into the first stitch, at the base of the turning chain.
- The chain at the start of a round never counts as a stitch. Work the first stitch of the round into the stitch at its base, where the round was joined.
- Odd-numbered rows are right side rows. Mark the right side of each piece with a stitch marker or a scrap of yarn.
- Left and right are those of the person who wears the vest.
- The ribs are worked sideways in back-loop single crochet (UK: double crochet). The body is worked up from a long edge of a rib, one stitch in the end of each rib row. The rib draws in: it is a little narrower than the body above it.
- Diamonds: a row of the front names its colors as they come. Each diamond, and each piece of the background between diamonds, has a small ball of its own; no yarn is carried behind the others. To change color, work the last yarn over of the last stitch in the old color with the new yarn, and lay the old yarn over the new one on the wrong side, so that the two cross and no hole is left. A row that begins with no color named, or with a decrease, begins with yarn A. When the next row begins with another color than the one in use, work the last yarn over of the last stitch before the turn with that color, so that the turning chain is in it too. A color that is not needed any more is cut, with an end of about 6 in (15 cm); a color that is named again is joined there.
- Surface slip stitch: hold yarn D behind the front. Insert the hook from the right side to the wrong side in the first hole and pull up a loop; [insert the hook in the next hole, yarn over, and pull the loop to the right side and through the loop on the hook]: each repeat is one slip stitch. Work loosely. At the end of a line cut the yarn, pull it through the last loop, take it to the wrong side on the other side of that loop and weave it in.
- To work into the end of a row, insert the hook under two threads at the side of its edge stitch.
- A decrease counts as one stitch.
- Sew every seam with the yarn needle and yarn A.
- Color changes in rounds: work the sl st that joins the round before with the new yarn. Cut the old yarn, leaving an end of about 6 in (15 cm), or, if it is needed again within 6 rnds, carry it loosely up the inside at the join.
- In back loop only: insert the hook under the loop of the stitch that is farther from you, and leave the nearer loop free.

For your own crochet, gifts and handmade pieces you sell. Do not resell or share this PDF or copies of it.

Instructions

Chosen: M, to fit bust 37 in (94 cm). Square brackets [ ] hold a repeat: work what is inside as many times as it says. The count in round brackets at the end of a line is what that line leaves. Tick the box when a row is done. In UK terms sc is double crochet, hdc is half treble and sl st is slip stitch.

Hem rib: make 2, one for the back and one for the front

Yarn A, navy.

☐ **Foundation**	With yarn A, ch 11.	
☐ **Row 1 (RS)**	Sc in 2nd ch from hook and in each ch across	**(10 sc)**
☐ **Rows 2 to 80**	Ch 1, turn; sc in back loop only of each st across	**(10 sc)**

A box for each row, 2 to 80: tick them off as you go.

2 3 4 5 6 7 8 9 10 11 12 13 14 15 16 17 18 19 20 21 22 23 24 25 26 27 28 29 30
31 32 33 34 35 36 37 38 39 40 41 42 43 44 45 46 47 48 49 50 51 52 53 54 55 56 57 58 59
60 61 62 63 64 65 66 67 68 69 70 71 72 73 74 75 76 77 78 79 80

☐ **End** Fasten off.

Back

Yarn A, navy.

☐ **Foundation**	Hold a hem rib with one long edge at the top. Join yarn A at the right-hand end of that edge; ch 1, sc in the end of each rib row across (80 sc). This is row 1, and a right side row.	
☐ **Rows 2 to 50**	Ch 1, turn; hdc in each st across	**(80 hdc)**

A box for each row, 2 to 50: tick them off as you go.

2 3 4 5 6 7 8 9 10 11 12 13 14 15 16 17 18 19 20 21 22 23 24 25 26 27 28 29 30
31 32 33 34 35 36 37 38 39 40 41 42 43 44 45 46 47 48 49 50

☐ **Row 51**	Fasten off and turn. Skip the first 4 sts and join yarn A in the next st; ch 1, and beginning in that st, hdc in next 72 sts, leave the last 4 sts unworked	**(72 hdc)**
☐ **Rows 52 to 57**	Ch 1, turn; hdc2tog, hdc in each st across to last 2 sts, hdc2tog	**(60 hdc)**

A box for each row, 52 to 57: tick them off as you go.

52 53 54 55 56 57

☐ **Rows 58 to 78**	Ch 1, turn; hdc in each st across	**(60 hdc)**

A box for each row, 58 to 78: tick them off as you go.

58 59 60 61 62 63 64 65 66 67 68 69 70 71 72 73 74 75 76 77 78

☐ **End** The back measures about 20 in (51 cm) wide above the rib, 15 in (38 cm) across above the armholes and 25½ in (65 cm) long with the rib. Fasten off.

Front

Yarns in order of use: A, navy; C, brick; B, smoke gray.

☐ **Foundation**	Hold a hem rib with one long edge at the top. Join yarn A at the right-hand end of that edge; ch 1, sc in the end of each rib row across (80 sc). This is row 1, and a right side row.	
☐ **Rows 2 to 3**	Ch 1, turn; hdc in each st across	**(80 hdc)**

A box for each row, 2 to 3: tick them off as you go.

2 3

For your own crochet, gifts and handmade pieces you sell. Do not resell or share this PDF or copies of it.

☐ **Row 4**	Ch 1, turn; hdc in next 7 sts, [with C hdc in next 2 sts, with A hdc in next 14 sts, with B hdc in next 2 sts, with A hdc in next 14 sts] twice, with C hdc in next 2 sts, with A hdc in next 7 sts	**(80 hdc)**
☐ **Row 5**	Ch 1, turn; hdc in next 6 sts, [with C hdc in next 4 sts, with A hdc in next 12 sts, with B hdc in next 4 sts, with A hdc in next 12 sts] twice, with C hdc in next 4 sts, with A hdc in next 6 sts	**(80 hdc)**
☐ **Row 6**	Ch 1, turn; hdc in next 5 sts, [with C hdc in next 6 sts, with A hdc in next 10 sts, with B hdc in next 6 sts, with A hdc in next 10 sts] twice, with C hdc in next 6 sts, with A hdc in next 5 sts	**(80 hdc)**
☐ **Row 7**	Ch 1, turn; hdc in next 4 sts, [with C hdc in next 8 sts, with A hdc in next 8 sts, with B hdc in next 8 sts, with A hdc in next 8 sts] twice, with C hdc in next 8 sts, with A hdc in next 4 sts	**(80 hdc)**
☐ **Row 8**	Ch 1, turn; hdc in next 3 sts, [with C hdc in next 10 sts, with A hdc in next 6 sts, with B hdc in next 10 sts, with A hdc in next 6 sts] twice, with C hdc in next 10 sts, with A hdc in next 3 sts	**(80 hdc)**
☐ **Row 9**	Ch 1, turn; hdc in next 2 sts, [with C hdc in next 12 sts, with A hdc in next 4 sts, with B hdc in next 12 sts, with A hdc in next 4 sts] twice, with C hdc in next 12 sts, with A hdc in next 2 sts	**(80 hdc)**
☐ **Rows 10 to 11**	Ch 1, turn; hdc in next st, [with C hdc in next 14 sts, with A hdc in next 2 sts, with B hdc in next 14 sts, with A hdc in next 2 sts] twice, with C hdc in next 14 sts, with A hdc in next st	**(80 hdc)**

A box for each row, 10 to 11: tick them off as you go.

10 11

☐ **Row 12**	Ch 1, turn; hdc in next 2 sts, [with C hdc in next 12 sts, with A hdc in next 4 sts, with B hdc in next 12 sts, with A hdc in next 4 sts] twice, with C hdc in next 12 sts, with A hdc in next 2 sts	**(80 hdc)**
☐ **Row 13**	Ch 1, turn; hdc in next 3 sts, [with C hdc in next 10 sts, with A hdc in next 6 sts, with B hdc in next 10 sts, with A hdc in next 6 sts] twice, with C hdc in next 10 sts, with A hdc in next 3 sts	**(80 hdc)**
☐ **Row 14**	Ch 1, turn; hdc in next 4 sts, [with C hdc in next 8 sts, with A hdc in next 8 sts, with B hdc in next 8 sts, with A hdc in next 8 sts] twice, with C hdc in next 8 sts, with A hdc in next 4 sts	**(80 hdc)**

For your own crochet, gifts and handmade pieces you sell. Do not resell or share this PDF or copies of it.

☐ **Row 15**	Ch 1, turn; hdc in next 5 sts, [with C hdc in next 6 sts, with A hdc in next 10 sts, with B hdc in next 6 sts, with A hdc in next 10 sts] twice, with C hdc in next 6 sts, with A hdc in next 5 sts	**(80 hdc)**
☐ **Row 16**	Ch 1, turn; hdc in next 6 sts, [with C hdc in next 4 sts, with A hdc in next 12 sts, with B hdc in next 4 sts, with A hdc in next 12 sts] twice, with C hdc in next 4 sts, with A hdc in next 6 sts	**(80 hdc)**
☐ **Row 17**	Ch 1, turn; hdc in next 7 sts, [with C hdc in next 2 sts, with A hdc in next 14 sts, with B hdc in next 2 sts, with A hdc in next 14 sts] twice, with C hdc in next 2 sts, with A hdc in next 7 sts	**(80 hdc)**
☐ **Rows 18 to 19**	Ch 1, turn; hdc in each st across	**(80 hdc)**

A box for each row, 18 to 19: tick them off as you go.

18 19

☐ **Row 20**	Ch 1, turn; hdc in next 7 sts, [with C hdc in next 2 sts, with A hdc in next 14 sts, with B hdc in next 2 sts, with A hdc in next 14 sts] twice, with C hdc in next 2 sts, with A hdc in next 7 sts	**(80 hdc)**
☐ **Row 21**	Ch 1, turn; hdc in next 6 sts, [with C hdc in next 4 sts, with A hdc in next 12 sts, with B hdc in next 4 sts, with A hdc in next 12 sts] twice, with C hdc in next 4 sts, with A hdc in next 6 sts	**(80 hdc)**
☐ **Row 22**	Ch 1, turn; hdc in next 5 sts, [with C hdc in next 6 sts, with A hdc in next 10 sts, with B hdc in next 6 sts, with A hdc in next 10 sts] twice, with C hdc in next 6 sts, with A hdc in next 5 sts	**(80 hdc)**
☐ **Row 23**	Ch 1, turn; hdc in next 4 sts, [with C hdc in next 8 sts, with A hdc in next 8 sts, with B hdc in next 8 sts, with A hdc in next 8 sts] twice, with C hdc in next 8 sts, with A hdc in next 4 sts	**(80 hdc)**
☐ **Row 24**	Ch 1, turn; hdc in next 3 sts, [with C hdc in next 10 sts, with A hdc in next 6 sts, with B hdc in next 10 sts, with A hdc in next 6 sts] twice, with C hdc in next 10 sts, with A hdc in next 3 sts	**(80 hdc)**
☐ **Row 25**	Ch 1, turn; hdc in next 2 sts, [with C hdc in next 12 sts, with A hdc in next 4 sts, with B hdc in next 12 sts, with A hdc in next 4 sts] twice, with C hdc in next 12 sts, with A hdc in next 2 sts	**(80 hdc)**

For your own crochet, gifts and handmade pieces you sell. Do not resell or share this PDF or copies of it.

☐ **Rows 26 to 27** Ch 1, turn; hdc in next st,
[with C hdc in next 14 sts, with A hdc in next 2 sts, with B hdc in next 14 sts, with A hdc in next 2 sts] twice,
with C hdc in next 14 sts, with A hdc in next st **(80 hdc)**

A box for each row, 26 to 27: tick them off as you go.

26 27

☐ **Row 28** Ch 1, turn; hdc in next 2 sts,
[with C hdc in next 12 sts, with A hdc in next 4 sts, with B hdc in next 12 sts, with A hdc in next 4 sts] twice,
with C hdc in next 12 sts, with A hdc in next 2 sts **(80 hdc)**

☐ **Row 29** Ch 1, turn; hdc in next 3 sts,
[with C hdc in next 10 sts, with A hdc in next 6 sts, with B hdc in next 10 sts, with A hdc in next 6 sts] twice,
with C hdc in next 10 sts, with A hdc in next 3 sts **(80 hdc)**

☐ **Row 30** Ch 1, turn; hdc in next 4 sts,
[with C hdc in next 8 sts, with A hdc in next 8 sts, with B hdc in next 8 sts, with A hdc in next 8 sts] twice,
with C hdc in next 8 sts, with A hdc in next 4 sts **(80 hdc)**

☐ **Row 31** Ch 1, turn; hdc in next 5 sts,
[with C hdc in next 6 sts, with A hdc in next 10 sts, with B hdc in next 6 sts, with A hdc in next 10 sts] twice,
with C hdc in next 6 sts, with A hdc in next 5 sts **(80 hdc)**

☐ **Row 32** Ch 1, turn; hdc in next 6 sts,
[with C hdc in next 4 sts, with A hdc in next 12 sts, with B hdc in next 4 sts, with A hdc in next 12 sts] twice,
with C hdc in next 4 sts, with A hdc in next 6 sts **(80 hdc)**

☐ **Row 33** Ch 1, turn; hdc in next 7 sts,
[with C hdc in next 2 sts, with A hdc in next 14 sts, with B hdc in next 2 sts, with A hdc in next 14 sts] twice,
with C hdc in next 2 sts, with A hdc in next 7 sts **(80 hdc)**

☐ **Rows 34 to 35** Ch 1, turn; hdc in each st across **(80 hdc)**

A box for each row, 34 to 35: tick them off as you go.

34 35

☐ **Row 36** Ch 1, turn; hdc in next 7 sts,
[with C hdc in next 2 sts, with A hdc in next 14 sts, with B hdc in next 2 sts, with A hdc in next 14 sts] twice,
with C hdc in next 2 sts, with A hdc in next 7 sts **(80 hdc)**

☐ **Row 37** Ch 1, turn; hdc in next 6 sts,
[with C hdc in next 4 sts, with A hdc in next 12 sts, with B hdc in next 4 sts, with A hdc in next 12 sts] twice,
with C hdc in next 4 sts, with A hdc in next 6 sts **(80 hdc)**

For your own crochet, gifts and handmade pieces you sell. Do not resell or share this PDF or copies of it.

☐ **Row 38**	Ch 1, turn; hdc in next 5 sts, [with C hdc in next 6 sts, with A hdc in next 10 sts, with B hdc in next 6 sts, with A hdc in next 10 sts] twice, with C hdc in next 6 sts, with A hdc in next 5 sts	**(80 hdc)**
☐ **Row 39**	Ch 1, turn; hdc in next 4 sts, [with C hdc in next 8 sts, with A hdc in next 8 sts, with B hdc in next 8 sts, with A hdc in next 8 sts] twice, with C hdc in next 8 sts, with A hdc in next 4 sts	**(80 hdc)**
☐ **Row 40**	Ch 1, turn; hdc in next 3 sts, [with C hdc in next 10 sts, with A hdc in next 6 sts, with B hdc in next 10 sts, with A hdc in next 6 sts] twice, with C hdc in next 10 sts, with A hdc in next 3 sts	**(80 hdc)**
☐ **Row 41**	Ch 1, turn; hdc in next 2 sts, [with C hdc in next 12 sts, with A hdc in next 4 sts, with B hdc in next 12 sts, with A hdc in next 4 sts] twice, with C hdc in next 12 sts, with A hdc in next 2 sts	**(80 hdc)**
☐ **Rows 42 to 43**	Ch 1, turn; hdc in next st, [with C hdc in next 14 sts, with A hdc in next 2 sts, with B hdc in next 14 sts, with A hdc in next 2 sts] twice, with C hdc in next 14 sts, with A hdc in next st	**(80 hdc)**

A box for each row, 42 to 43: tick them off as you go.

42 43

☐ **Row 44**	Ch 1, turn; hdc in next 2 sts, [with C hdc in next 12 sts, with A hdc in next 4 sts, with B hdc in next 12 sts, with A hdc in next 4 sts] twice, with C hdc in next 12 sts, with A hdc in next 2 sts	**(80 hdc)**
☐ **Row 45**	Ch 1, turn; hdc in next 3 sts, [with C hdc in next 10 sts, with A hdc in next 6 sts, with B hdc in next 10 sts, with A hdc in next 6 sts] twice, with C hdc in next 10 sts, with A hdc in next 3 sts	**(80 hdc)**
☐ **Row 46**	Ch 1, turn; hdc in next 4 sts, [with C hdc in next 8 sts, with A hdc in next 8 sts, with B hdc in next 8 sts, with A hdc in next 8 sts] twice, with C hdc in next 8 sts, with A hdc in next 4 sts	**(80 hdc)**
☐ **Row 47**	Ch 1, turn; hdc in next 5 sts, [with C hdc in next 6 sts, with A hdc in next 10 sts, with B hdc in next 6 sts, with A hdc in next 10 sts] twice, with C hdc in next 6 sts, with A hdc in next 5 sts	**(80 hdc)**
☐ **Row 48**	Ch 1, turn; hdc in next 6 sts, [with C hdc in next 4 sts, with A hdc in next 12 sts, with B hdc in next 4 sts, with A hdc in next 12 sts] twice, with C hdc in next 4 sts, with A hdc in next 6 sts	**(80 hdc)**

For your own crochet, gifts and handmade pieces you sell. Do not resell or share this PDF or copies of it.

☐ **Row 49**	Ch 1, turn; hdc in next 7 sts, [with C hdc in next 2 sts, with A hdc in next 14 sts, with B hdc in next 2 sts, with A hdc in next 14 sts] twice, with C hdc in next 2 sts, with A hdc in next 7 sts	**(80 hdc)**
☐ **Row 50**	Ch 1, turn; hdc in each st across	**(80 hdc)**
☐ **End**	From here on the two sides of the front are worked one after the other, each on its own half of row 50; row 51 joins the yarn anew.	

Front, left side

Yarns in order of use: A, navy; B, smoke gray.

☐ **Foundation**	Go on from row 50 of the front. Row 51 is a right side row: cut the yarn and join it again as that row says. The armhole edge is at the beginning of that row and the neck edge at its end.	
☐ **Row 51**	Fasten off and turn. Skip the first 4 sts and join yarn A in the next st; ch 1, and beginning in that st, hdc in next 34 sts, hdc2tog, leave the last 40 sts unworked	**(35 hdc)**
☐ **Row 52**	Ch 1, turn; hdc in next 14 sts, with B hdc in next 2 sts, with A hdc in next 17 sts, hdc2tog	**(34 hdc)**
☐ **Row 53**	Ch 1, turn; hdc2tog, hdc in next 15 sts, with B hdc in next 4 sts, with A hdc in next 11 sts, hdc2tog	**(32 hdc)**
☐ **Row 54**	Ch 1, turn; hdc in next 11 sts, with B hdc in next 6 sts, with A hdc in next 13 sts, hdc2tog	**(31 hdc)**
☐ **Row 55**	Ch 1, turn; hdc2tog, hdc in next 11 sts, with B hdc in next 8 sts, with A hdc in next 8 sts, hdc2tog	**(29 hdc)**
☐ **Row 56**	Ch 1, turn; hdc in next 8 sts, with B hdc in next 10 sts, with A hdc in next 9 sts, hdc2tog	**(28 hdc)**
☐ **Row 57**	Ch 1, turn; hdc2tog, hdc in next 7 sts, with B hdc in next 12 sts, with A hdc in next 5 sts, hdc2tog	**(26 hdc)**
☐ **Row 58**	Ch 1, turn; hdc in next 5 sts, with B hdc in next 14 sts, with A hdc in next 7 sts	**(26 hdc)**
☐ **Row 59**	Ch 1, turn; hdc in next 7 sts, with B hdc in next 14 sts, with A hdc in next 3 sts, hdc2tog	**(25 hdc)**
☐ **Row 60**	Ch 1, turn; hdc in next 5 sts, with B hdc in next 12 sts, with A hdc in next 8 sts	**(25 hdc)**
☐ **Row 61**	Ch 1, turn; hdc in next 9 sts, with B hdc in next 10 sts, with A hdc in next 4 sts, hdc2tog	**(24 hdc)**
☐ **Row 62**	Ch 1, turn; hdc in next 6 sts, with B hdc in next 8 sts, with A hdc in next 10 sts	**(24 hdc)**
☐ **Row 63**	Ch 1, turn; hdc in next 11 sts, with B hdc in next 6 sts, with A hdc in next 5 sts, hdc2tog	**(23 hdc)**
☐ **Row 64**	Ch 1, turn; hdc in next 7 sts, with B hdc in next 4 sts, with A hdc in next 12 sts	**(23 hdc)**
☐ **Row 65**	Ch 1, turn; hdc in next 13 sts, with B hdc in next 2 sts, with A hdc in next 6 sts, hdc2tog	**(22 hdc)**
☐ **Row 66**	Ch 1, turn; hdc in each st across	**(22 hdc)**

For your own crochet, gifts and handmade pieces you sell. Do not resell or share this PDF or copies of it.

☐ **Row 67**	Ch 1, turn; hdc in each st across to last 2 sts, hdc2tog	**(21 hdc)**
☐ **Rows 68 to 75**	Repeat Rows 66 and 67, 4 more times (20, 19, 18, 17 hdc at the ends of the repeats)	**(17 hdc)**

A box for each row, 68 to 75: tick them off as you go.

☐ 68 ☐ 69 ☐ 70 ☐ 71 ☐ 72 ☐ 73 ☐ 74 ☐ 75

☐ **Rows 76 to 78**	Ch 1, turn; hdc in each st across	**(17 hdc)**

A box for each row, 76 to 78: tick them off as you go.

☐ 76 ☐ 77 ☐ 78

☐ **End**	The 17 sts left are the shoulder. Fasten off.

Front, right side

Yarns in order of use: A, navy; B, smoke gray.

☐ **Foundation**	Go back to row 50 of the front, with the right side facing you, as for row 51 of the left side. Join yarn A in the next unworked st, the first of the 40 sts left. The first st of row 51 goes in the joining st. The neck edge is at the beginning of that row and the armhole edge at its end.	
☐ **Row 51**	Ch 1; hdc2tog, hdc in next 34 sts, leave the last 4 sts unworked	**(35 hdc)**
☐ **Row 52**	Ch 1, turn; hdc2tog, hdc in next 17 sts, with B hdc in next 2 sts, with A hdc in next 14 sts	**(34 hdc)**
☐ **Row 53**	Ch 1, turn; hdc2tog, hdc in next 11 sts, with B hdc in next 4 sts, with A hdc in next 15 sts, hdc2tog	**(32 hdc)**
☐ **Row 54**	Ch 1, turn; hdc2tog, hdc in next 13 sts, with B hdc in next 6 sts, with A hdc in next 11 sts	**(31 hdc)**
☐ **Row 55**	Ch 1, turn; hdc2tog, hdc in next 8 sts, with B hdc in next 8 sts, with A hdc in next 11 sts, hdc2tog	**(29 hdc)**
☐ **Row 56**	Ch 1, turn; hdc2tog, hdc in next 9 sts, with B hdc in next 10 sts, with A hdc in next 8 sts	**(28 hdc)**
☐ **Row 57**	Ch 1, turn; hdc2tog, hdc in next 5 sts, with B hdc in next 12 sts, with A hdc in next 7 sts, hdc2tog	**(26 hdc)**
☐ **Row 58**	Ch 1, turn; hdc in next 7 sts, with B hdc in next 14 sts, with A hdc in next 5 sts	**(26 hdc)**
☐ **Row 59**	Ch 1, turn; hdc2tog, hdc in next 3 sts, with B hdc in next 14 sts, with A hdc in next 7 sts	**(25 hdc)**
☐ **Row 60**	Ch 1, turn; hdc in next 8 sts, with B hdc in next 12 sts, with A hdc in next 5 sts	**(25 hdc)**
☐ **Row 61**	Ch 1, turn; hdc2tog, hdc in next 4 sts, with B hdc in next 10 sts, with A hdc in next 9 sts	**(24 hdc)**
☐ **Row 62**	Ch 1, turn; hdc in next 10 sts, with B hdc in next 8 sts, with A hdc in next 6 sts	**(24 hdc)**
☐ **Row 63**	Ch 1, turn; hdc2tog, hdc in next 5 sts, with B hdc in next 6 sts, with A hdc in next 11 sts	**(23 hdc)**
☐ **Row 64**	Ch 1, turn; hdc in next 12 sts, with B hdc in next 4 sts, with A hdc in next 7 sts	**(23 hdc)**
☐ **Row 65**	Ch 1, turn; hdc2tog, hdc in next 6 sts, with B hdc in next 2 sts, with A hdc in next 13 sts	**(22 hdc)**

For your own crochet, gifts and handmade pieces you sell. Do not resell or share this PDF or copies of it.

☐ **Row 66**	Ch 1, turn; hdc in each st across	**(22 hdc)**
☐ **Row 67**	Ch 1, turn; hdc2tog, hdc in each st across	**(21 hdc)**
☐ **Rows 68 to 75**	Repeat Rows 66 and 67, 4 more times (20, 19, 18, 17 hdc at the ends of the repeats)	**(17 hdc)**

A box for each row, 68 to 75: tick them off as you go.

68 69 70 71 72 73 74 75

☐ **Rows 76 to 78**	Ch 1, turn; hdc in each st across	**(17 hdc)**

A box for each row, 76 to 78: tick them off as you go.

76 77 78

☐ **End**	The 17 sts left are the shoulder. Fasten off.	

Neckband

Yarn A, navy.

☐ **Foundation**	Work this at step 4 of the finishing. With the right side facing, join yarn A in the first of the 26 free sts of the back neck, beside the right shoulder seam. Rnd 1 goes along the back neck, down the 28 rows of the left side of the neck and up the 28 rows of the right side. Colors: rnd 1 yarn A; rnd 2 yarn B; rnds 3 and 4 yarn A.	
☐ **Rnd 1**	Ch 1; sc in each of next 26 free sts, now down the left side, **[**sc in the end of each of next 3 rows, 2 sc in the end of next row**] 7 times**, now up the right side, **[**sc in the end of each of next 3 rows, 2 sc in the end of next row**] 7 times**; join with sl st in first sc	**(96 sc)**
☐ **Rnd 2**	Ch 1; sc in next 59 sts, sc2tog twice, sc in each st around; join with sl st in first sc	**(94 sc)**
☐ **Rnd 3**	Ch 1; sc in next 58 sts, sc2tog twice, sc in each st around; join with sl st in first sc	**(92 sc)**
☐ **Rnd 4**	Ch 1; sc in next 57 sts, sc2tog twice, sc in each st around; join with sl st in first sc	**(90 sc)**
☐ **End**	The two decreases of each rnd meet at the point of the V, so that the band lies flat. Fasten off.	

Armhole band: make 2

Yarn A, navy.

☐ **Foundation**	Work this at step 5 of the finishing. With the right side facing, join yarn A in the first of the 4 free sts to the left of a side seam. Rnd 1 goes along these sts, up the 28 rows to the shoulder seam, down the 28 rows on the other side of it and along the last 4 free sts, back to the side seam. Colors: rnd 1 yarn A; rnd 2 yarn B; rnds 3 and 4 yarn A.	
☐ **Rnd 1**	Ch 1; sc in each of next 4 free sts, now up to the shoulder, **[**sc in the end of each of next 4 rows, 2 sc in the end of next row**] 5 times**, sc in the end of each of next 3 rows, now down from the shoulder, **[**sc in the end of each of next 4 rows, 2 sc in the end of next row**] 5 times**, sc in the end of each of next 3 rows, now along the underarm, sc in each of next 4 free sts; join with sl st in first sc	**(74 sc)**

For your own crochet, gifts and handmade pieces you sell. Do not resell or share this PDF or copies of it.

☐ **Rnds 2 to 4**	Ch 1; sc in each st around; join with sl st in first sc	**(74 sc)**

A box for each round, 2 to 4: tick them off as you go.

2 3 4

☐ **End** Fasten off.

Assembly

1. Crossing lines: work them now, while the front is flat, in yarn D with the right side of the front facing, in surface slip stitch, as the notes say. There are 18 straight lines. The holes of a row lie along its top, where it meets the next row. Gap 1 is the hole between the first and the second st of that row, counted from the right-hand edge as you look at the front; gap 2 is the hole between the second and the third st, and so on. The right-hand edge and the left-hand edge are the edge of the piece itself, at the top of the first and of the last st of the row as you look at it. From row 51 on, count the sts of the one side that is named, from its own right-hand edge. Pull up the first loop in the hole where the line begins. Each slip stitch then ends one row higher and one st farther to the left, or to the right, as the line says; so a line of 10 slip stitches ends 10 rows higher. Each line is given by its first hole, its number of slip stitches and its last hole. Lines cross each other, and two lines may begin or end in the same hole. Line 1: from row 2, the right-hand edge, 70 slip stitches to the left, to row 72 of the right side, the left-hand edge. Line 2: from row 2, gap 16, 54 slip stitches to the left, to row 56 of the right side, gap 27. Line 3: from row 2, gap 16, 16 slip stitches to the right, to row 18, the right-hand edge. Line 4: from row 2, gap 32, 48 slip stitches to the left, to row 50, the left-hand edge. Line 5: from row 2, gap 32, 32 slip stitches to the right, to row 34, the right-hand edge. Line 6: from row 2, gap 48, 32 slip stitches to the left, to row 34, the left-hand edge. Line 7: from row 2, gap 48, 48 slip stitches to the right, to row 50, the right-hand edge. Line 8: from row 2, gap 64, 16 slip stitches to the left, to row 18, the left-hand edge. Line 9: from row 2, gap 64, 54 slip stitches to the right, to row 56 of the left side, gap 1. Line 10: from row 2, the left-hand edge, 70 slip stitches to the right, to row 72 of the left side, the right-hand edge. Line 11: from row 18, the right-hand edge, 37 slip stitches to the left, to row 55 of the left side, the left-hand edge. Line 12: from row 18, the left-hand edge, 37 slip stitches to the right, to row 55 of the right side, the right-hand edge. Line 13: from row 34, the right-hand edge, 32 slip stitches to the left, to row 66 of the left side, the left-hand edge. Line 14: from row 34, the left-hand edge, 32 slip stitches to the right, to row 66 of the right side, the right-hand edge. Line 15: from row 60 of the left side, the right-hand edge, 17 slip stitches to the left, to row 77 of the left side, the left-hand edge. Line 16: from row 60 of the right side, the left-hand edge, 17 slip stitches to the right, to row 77 of the right side, the right-hand edge. Line 17: from row 66 of the left side, the left-hand edge, 12 slip stitches to the right, to row 78 of the left side, gap 10. Line 18: from row 66 of the right side, the right-hand edge, 12 slip stitches to the left, to row 78 of the right side, gap 7.

2. Shoulders: lay the front on the back with right sides together. Sew the 17 shoulder sts of each side of the front to the 17 sts at that end of the last row of the back, st to st, and leave the middle 26 sts of the back free for the neck.

3. Sides: sew each side seam from the armhole down to the hem, the 50 row ends of the front to the 50 row ends of the back and the two ends of the ribs to each other.

4. Neckband: work it now, as written above.

5. Armhole bands: work them now, as written above.

Finishing

- Weave in all the ends. Wash as the yarn label says and lay flat to the measurements to dry.

In all: 2 pieces; 13,370 stitches (800 in each hem rib, 5,612 in the back, 3,920 in the front, 637 in the front, left side, 637 in the front, right side, 372 in the neckband, 296 in each armhole band).

Found a mistake in this pattern? Tell us at flossfield.com, under Make a request.

For your own crochet, gifts and handmade pieces you sell. Do not resell or share this PDF or copies of it.