Baby boy outfit: shirt and shorts

6-12 months, to fit chest 18 in (45.5 cm) · US terms



Finished size

About 18½ in (47 cm) at the for a waist of and about 21 in (53.5 cm) at the shirt chest

To fit a chest of 18 in (45.5 cm) and a hip of 19 in (48.5 cm), head 17½ in (44.5 cm)

Skill

Intermediate

Basic stitches, simple shaping, a placket and a collar

Yarn

Light (3), 2 colors

Hook

4.5 mm (US 7)

Gauge

16 stitches and 13½ rows to 4 in (10 cm)

In half double crochet (UK half treble).

What you need

Yarn A: steel blue, main color **about 550 yd (503 m), an estimate**

Yarn B: cream, contrast **about 195 yd (178 m), an estimate**

By weight: about 300 g in all, an estimate, where 100 g is 250 yd (229 m).

Hook: 4.5 mm (US 7), or the size that gives you the gauge. Also: yarn needle, scissors, tape measure, stitch markers, 2 small buttons, ½ in (12 mm) across, 4 large buttons, 5/8 in (15 mm) across, 20 in (51 cm) of elastic ½ in (12 mm) wide (enough for any size; the finishing says how long a piece to cut), safety pins and sewing thread and a sewing needle.

To find how many balls: divide by the length on your yarn's label and round up. Buy them from one dye lot. The estimate is from the stitches of this size at this gauge.

Sizes

Size	Chest	Yarn, an estimate	Waist it is for	Shirt chest	Shirt length	Armhole depth	Sleeve	Neck	Placket opening	Shorts around the hips	Shorts waist to crotch	Shorts around each leg at its end	Shorts leg from the crotch to its end	Brace length
Newborn	14 in (35.5 cm)	about 500 yd (457 m)	13½ in (34.5 cm)	17 in (43 cm)	9 in (23 cm)	3½ in (9 cm)	2½ in (6.5 cm)	9½ in (24 cm)	3 in (7.5 cm)	17 in (43 cm)	6¼ in (16 cm)	9 in (23 cm)	1¾ in (4.5 cm)	14 in (35.5 cm)
0-3 months	16 in (40.5 cm)	about 590 yd (539 m)	16½ in (42 cm)	19 in (48.5 cm)	9¾ in (25 cm)	3¾ in (9.5 cm)	2½ in (6.5 cm)	10¾ in (27.5 cm)	3 in (7.5 cm)	20 in (51 cm)	6¾ in (17 cm)	10½ in (26.5 cm)	1¾ in (4.5 cm)	15½ in (39.5 cm)

For your own crochet, gifts and handmade pieces you sell. Do not resell or share this PDF or copies of it.

3-6 months	17 in (43 cm)	about 675 yd (617 m)	17½ in (44.5 cm)	20 in (51 cm)	10½ in (26.5 cm)	4 in (10 cm)	2¾ in (7 cm)	10¾ in (27.5 cm)	3½ in (9 cm)	21 in (53.5 cm)	7½ in (19 cm)	11 in (28 cm)	2¼ in (5.5 cm)	17 in (43 cm)
6-12 months (this file)	**18 in (45.5 cm)**	**about 745 yd (681 m)**	**18½ in (47 cm)**	**21 in (53.5 cm)**	**11¼ in (28.5 cm)**	**4¼ in (11 cm)**	**2¾ in (7 cm)**	**11¼ in (28.5 cm)**	**3½ in (9 cm)**	**22 in (56 cm)**	**8 in (20.5 cm)**	**12 in (30.5 cm)**	**2¼ in (5.5 cm)**	**18½ in (47 cm)**
12-18 months	19 in (48.5 cm)	about 825 yd (754 m)	19½ in (49.5 cm)	22 in (56 cm)	12 in (30.5 cm)	4½ in (11.5 cm)	3 in (7.5 cm)	12¼ in (31 cm)	4¼ in (11 cm)	23 in (58.5 cm)	8¼ in (21 cm)	12½ in (32 cm)	2½ in (6.5 cm)	19½ in (49.5 cm)
18-24 months	20 in (51 cm)	about 900 yd (823 m)	20 in (51 cm)	23 in (58.5 cm)	12¾ in (32.5 cm)	4¾ in (12 cm)	3 in (7.5 cm)	13 in (33 cm)	4¼ in (11 cm)	24 in (61 cm)	9 in (23 cm)	13 in (33 cm)	2½ in (6.5 cm)	20½ in (52 cm)

Schematic

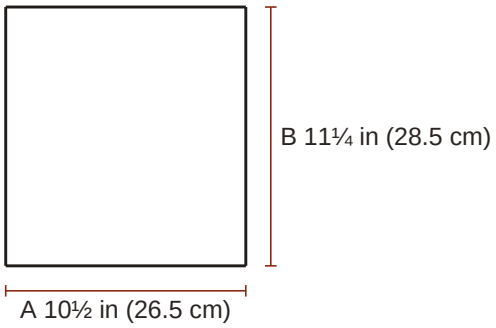

Back
A the width
B from top to bottom

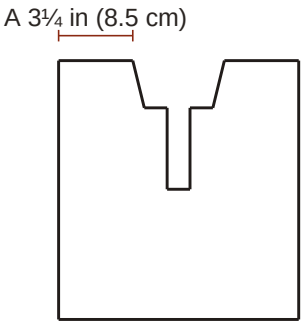

Front
A across the top

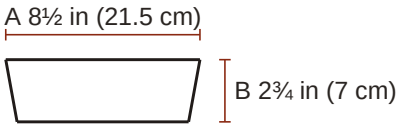

Sleeve
A half the top of the sleeve
B the sleeve

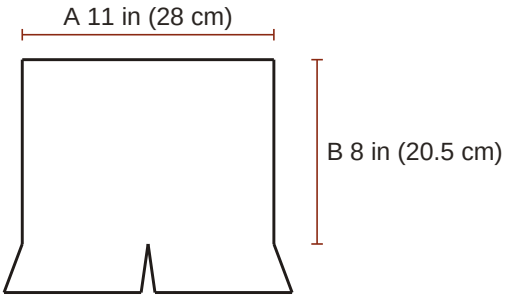

Shorts, laid flat
A the neck
B the shorts waist to crotch

Gauge

16 stitches and 13½ rows to 4 in (10 cm) in half double crochet.

> **The swatch.** A test piece to measure and pull out. It is not the start of the pattern. Ch 25; begin in the 2nd ch from the hook and work 20 rows of half double crochet on 24 sts, about 6 in (15 cm) wide and 6 in (15 cm) high, and measure 4 in (10 cm) in the middle. Use a larger hook if your swatch is small, a smaller one if it is large. Single crochet (UK: double crochet): about 18.5 rows or rounds to 4 in (10 cm), and 16 sts to 4 in (10 cm).

For your own crochet, gifts and handmade pieces you sell. Do not resell or share this PDF or copies of it.

Notes

- Baby sizes, one table for the shirt and the shorts: choose the shirt by the chest and the shorts by the hip.
- The chest of the finished shirt is 3 in (7.5 cm) wider than the body measurement at each size. No fit is promised beyond the measurements given. Around the hips the shorts are 3 in (7.5 cm) wider than the body measurement, for the diaper, and the elastic draws the waist in. A cotton yarn is cool to wear; it stretches less than wool and grows a little when it is worn.
- The shirt, the pocket and the braces are worked back and forth in rows; odd-numbered rows are right side rows. The shorts are worked in rounds. The rounds are not turned; the right side always faces you. The rounds of the shorts body and of the first leg begin at the middle of the back, those of the second leg at the middle of the front.
- The chain at the start of a row or round (ch 1 for single and half double crochet) never counts as a stitch. Work the first stitch into the stitch at its base.
- In rows, the last stitch goes into the last stitch of the row below, never into the turning chain.
- A decrease counts as one stitch.
- To work into a chain space, put the hook under the whole chain.
- The neck is small; the head goes through the placket. The buttonholes are on the left side as worn, which laps over the right side.
- The braces button on and off at both ends. Sew every part on firmly, through the fabric several times, weave the ends in well, and look at them before each wear. The braces are for a baby who is awake and watched; take them off before a nap.
- Color changes in rows: work the last yarn over of the last stitch of the row before with the new yarn. Cut the old yarn, leaving an end of about 6 in (15 cm), or, if it is needed again at the same edge within 6 rows and that edge is straight, carry it loosely up the edge.
- Color changes in rounds: work the sl st that joins the round before with the new yarn. Cut the old yarn, leaving an end of about 6 in (15 cm), or, if it is needed again within 6 rnds, carry it loosely up the inside at the join.
- In back loop only: insert the hook under the loop of the stitch that is farther from you, and leave the nearer loop free.
- Neck around (buttoned), without the collar 11¼ in (28.5 cm).

For your own crochet, gifts and handmade pieces you sell. Do not resell or share this PDF or copies of it.

Instructions

6-12 months, to fit chest 18 in (45.5 cm). US terms.

ch chain, **sl st** slip stitch, **sc** single crochet (UK double crochet), **hdc** half double crochet (UK half treble), **Rnd** round, **st** stitch, **sp** space.
RS right side, the one that shows.
ch-2 sp: the gap under two chains; the hook goes in the gap.
(42 sc): the stitches you have when the row is done. **How to read a pattern**.

Special stitches

hdc2tog (half double crochet 2 stitches together (UK half treble 2 together)): [yarn over, insert the hook in the next stitch and pull up a loop] twice (5 loops on the hook); yarn over and pull through all 5 loops.

Back

Yarn B, cream.

☐ **Foundation**	With yarn B, ch 43. Colors: rows 1 to 3 yarn B; rows 4 and 5 yarn A; rows 6 and 7 yarn B; rows 8 to 11 yarn A; rows 12 and 13 yarn B; rows 14 to 39 yarn A.	
☐ **Row 1 (RS)**	Sc in 2nd ch from hook and in each ch across	(42 sc)
☐ **Rows 2 to 3**	Ch 1, turn; sc in each st across	(42 sc)
	2 3	
☐ **Rows 4 to 39**	Ch 1, turn; hdc in each st across	(42 hdc)
	4 5 6 7 8 9 10 11 12 13 14 15 16 17 18 19 20 21 22 23 24 25 26 27 28 29 30 31 32 33 34 35 36 37 38 39	
☐ **End**	The back measures about 10½ in (26.5 cm) wide and 11¼ in (28.5 cm) long. Fasten off.	

Front

Yarn B, cream.

☐ **Foundation**	With yarn B, ch 43. Colors: rows 1 to 3 yarn B; rows 4 and 5 yarn A; rows 6 and 7 yarn B; rows 8 to 11 yarn A; rows 12 and 13 yarn B; rows 14 to 20 yarn A.	
☐ **Row 1 (RS)**	Sc in 2nd ch from hook and in each ch across	(42 sc)
☐ **Rows 2 to 3**	Ch 1, turn; sc in each st across	(42 sc)
	2 3	
☐ **Rows 4 to 20**	Ch 1, turn; hdc in each st across	(42 hdc)
	4 5 6 7 8 9 10 11 12 13 14 15 16 17 18 19 20	
☐ **End**	Do not fasten off.	

For your own crochet, gifts and handmade pieces you sell. Do not resell or share this PDF or copies of it.

Front, left side

Yarn A, steel blue.

☐ **Foundation**	Go on from row 20 of the front. This is the left side as worn; the opening is at the end of the right side rows.	
☐ **Row 21**	Ch 1, turn; hdc in next 19 sts, leave the last 23 sts unworked	(19 hdc)
☐ **Rows 22 to 32**	Ch 1, turn; hdc in each st across 22 23 24 25 26 27 28 29 30 31 32	(19 hdc)
☐ **Row 33**	Ch 1, turn; hdc in next 16 sts, leave the last 3 sts unworked. The neck edge is at the end of this row	(16 hdc)
☐ **Row 34**	Ch 1, turn; hdc2tog, hdc in each st across	(15 hdc)
☐ **Row 35**	Ch 1, turn; hdc in each st across to last 2 sts, hdc2tog	(14 hdc)
☐ **Row 36**	Ch 1, turn; hdc2tog, hdc in each st across	(13 hdc)
☐ **Rows 37 to 39**	Ch 1, turn; hdc in each st across 37 38 39	(13 hdc)
☐ **End**	The 13 sts left are the shoulder. Fasten off.	

Front, right side

Yarn A, steel blue.

☐ **Foundation**	Go back to row 20 of the front, with the right side facing, as for row 21 of the left side. Skip the next 4 unworked sts for the foot of the placket and join yarn A in the next st: row 21 begins in that st. This is the right side as worn; the opening is at the beginning of the right side rows.	
☐ **Row 21**	Ch 1; hdc in each st across	(19 hdc)
☐ **Rows 22 to 31**	Ch 1, turn; hdc in each st across 22 23 24 25 26 27 28 29 30 31	(19 hdc)
☐ **Row 32**	Ch 1, turn; hdc in next 16 sts, leave the last 3 sts unworked. The neck edge is at the end of this row	(16 hdc)
☐ **Row 33**	Ch 1, turn; hdc2tog, hdc in each st across	(15 hdc)
☐ **Row 34**	Ch 1, turn; hdc in each st across to last 2 sts, hdc2tog	(14 hdc)
☐ **Row 35**	Ch 1, turn; hdc2tog, hdc in each st across	(13 hdc)
☐ **Rows 36 to 39**	Ch 1, turn; hdc in each st across 36 37 38 39	(13 hdc)
☐ **End**	The 13 sts left are the shoulder. Fasten off.	

For your own crochet, gifts and handmade pieces you sell. Do not resell or share this PDF or copies of it.

Buttonhole band

Yarn A, steel blue.

☐ **Foundation**	Work this at step 2 of Assembly. With the right side facing, join yarn A at the neck end of the opening edge of the left side, in the end of row 32. Ch 1; along rows 21 to 32 of the left side, met from the last of them, [2 sc in the end of the next row, sc in the end of each of the next 5 rows] twice (14 sc). This is row 1.	
☐ **Row 2**	Ch 1, turn; sc in each st across	(14 sc)
☐ **Row 3**	Ch 1, turn; sc in next 2 sts, ch 2, skip next 2 sts, sc in next 6 sts, ch 2, skip next 2 sts, sc in next 2 sts	(10 sc, 2 ch-2 sps)
☐ **Row 4**	Ch 1, turn; sc in next 2 sts, 2 sc in next ch-2 sp, sc in next 6 sts, 2 sc in next ch-2 sp, sc in next 2 sts	(14 sc)
☐ **Row 5**	Ch 1, turn; sc in each st across	(14 sc)
☐ **End**	Row 5 ends at the foot of the opening. Fasten off, leaving an end of about 8 in (20 cm) for sewing.	

Button band

Yarn A, steel blue.

☐ **Foundation**	Work this at step 2 of Assembly. With the right side facing, join yarn A at the foot of the opening edge of the right side, in the end of row 21. Ch 1; along rows 21 to 31 of the right side, [sc in the end of each of the next 2 rows, 2 sc in the end of the next row] 3 times, sc in the end of each of the next 2 rows (14 sc). This is row 1.	
☐ **Rows 2 to 5** 2 3 4 5	Ch 1, turn; sc in each st across	(14 sc)
☐ **End**	Fasten off.	

Collar

Yarn B, cream.

☐ **Foundation**	Colors: rows 1 to 6 yarn B; row 7 yarn A. Work this at step 3 of Assembly. With the right side facing, join yarn B at the neck of the right side (as worn), in the st next to the button band, the first of the 3 sts left unworked. Ch 1; sc in each of these 3 sts; along rows 32 to 39 of the right side, [sc in the end of each of the next 3 rows, 2 sc in the end of the next row] twice (10 sc); sc in each of the 16 free sts of row 39 of the back; along rows 33 to 39 of the left side, met from the last of them, sc in the end of the next row, [2 sc in the end of the next row, sc in the end of each of the next 2 rows] twice (9 sc); sc in each of the 3 sts left unworked at the neck of the left side. There are 41 sc in all. This is row 1.	
☐ **Rows 2 to 6** 2 3 4 5 6	Ch 1, turn; 2 hdc in first st, hdc in each st across to last st, 2 hdc in last st	(51 hdc)
☐ **Row 7**	Ch 1, turn; sc in each st across	(51 sc)
☐ **End**	Fasten off. The ends of the bands stay free of the collar. Turn the collar down to the outside along row 1.	

For your own crochet, gifts and handmade pieces you sell. Do not resell or share this PDF or copies of it.

Sleeve: make 2

Yarn B, cream.

☐ **Foundation**	With yarn B, ch 31. Colors: rows 1 to 3 yarn B; rows 4 to 10 yarn A.	
☐ **Row 1 (RS)**	Sc in 2nd ch from hook and in each ch across	(30 sc)
☐ **Rows 2 to 3** 2 3	Ch 1, turn; sc in each st across	(30 sc)
☐ **Row 4**	Ch 1, turn; hdc in each st across	(30 hdc)
☐ **Row 5**	Ch 1, turn; 2 hdc in first st, hdc in each st across to last st, 2 hdc in last st	(32 hdc)
☐ **Rows 6 to 7** 6 7	Repeat Rows 4 and 5, once more	(34 hdc)
☐ **Rows 8 to 10** 8 9 10	Ch 1, turn; hdc in each st across	(34 hdc)
☐ **End**	The sleeve measures about 8½ in (21.5 cm) across the top and 2¾ in (7 cm) long. Fasten off.	

Pocket

Yarn A, steel blue.

☐ **Foundation**	With yarn A, ch 9. Colors: rows 1 to 6 yarn A; row 7 yarn B.	
☐ **Row 1 (RS)**	Hdc in 2nd ch from hook and in each ch across	(8 hdc)
☐ **Rows 2 to 6** 2 3 4 5 6	Ch 1, turn; hdc in each st across	(8 hdc)
☐ **Row 7**	Ch 1, turn; sc in each st across	(8 sc)
☐ **End**	Fasten off, leaving an end of about 12 in (30 cm) of yarn B.	

Shorts body

Yarn B, cream.

☐ **Foundation**	Work the foundation chain loosely: it must open as wide as the hips. With yarn B, ch 88; join with sl st in first ch to form a ring, taking care not to twist the chain. Colors: rnds 1 to 6 yarn B; rnds 7 to 31 yarn A.	
☐ **Rnd 1**	Ch 1; sc in each ch around; join with sl st in first sc	(88 sc)
☐ **Rnds 2 to 3** 2 3	Ch 1; sc in each st around; join with sl st in first sc	(88 sc)
☐ **Rnd 4**	Ch 1; sc in back loop only of each st around; join with sl st in first sc	(88 sc)
☐ **Rnds 5 to 6** 5 6	Ch 1; sc in each st around; join with sl st in first sc	(88 sc)

For your own crochet, gifts and handmade pieces you sell. Do not resell or share this PDF or copies of it.

☐ **Rnds 7 to 31** 7 8 9 10 11 12 13 14 15 16 17 18 19 20 21 22 23 24 25 26 27 28 29 30 31	Ch 1; hdc in each st around; join with sl st in first hdc	(88 hdc)
☐ **End**	Fasten off.	

First leg

Yarn A, steel blue.

☐ **Foundation**	Colors: rnds 1 to 5 yarn A; rnds 6 to 8 yarn B. With the right side facing, join yarn A in the 45th st of rnd 31, at the middle of the front; ch 8 for the crotch, sl st in the first st of the rnd, at the middle of the back. Ch 1, hdc in that same st and in each of the next 43 sts, then hdc in each of the 8 crotch chs (52 hdc); join with sl st in first hdc. This is rnd 1.	
☐ **Rnd 2**	Ch 1; hdc in each st around; join with sl st in first hdc	(52 hdc)
☐ **Rnd 3**	Ch 1; hdc2tog, hdc in each st around to last 2 sts, hdc2tog; join with sl st in first hdc2tog	(50 hdc)
☐ **Rnds 4 to 5** 4 5	Repeat Rnds 2 and 3, once more	(48 hdc)
☐ **Rnds 6 to 8** 6 7 8	Ch 1; sc in each st around; join with sl st in first sc	(48 sc)
☐ **End**	Fasten off.	

Second leg

Yarn A, steel blue.

☐ **Foundation**	Colors: rnds 1 to 5 yarn A; rnds 6 to 8 yarn B. With the right side facing, join yarn A in the st of rnd 31 that the crotch chain begins in, at the middle of the front; ch 1, hdc in that st and in each of the next 43 sts, then hdc in each of the 8 crotch chs along their free side (52 hdc); join with sl st in first hdc. This is rnd 1.	
☐ **Rnd 2**	Ch 1; hdc in each st around; join with sl st in first hdc	(52 hdc)
☐ **Rnd 3**	Ch 1; hdc2tog, hdc in each st around to last 2 sts, hdc2tog; join with sl st in first hdc2tog	(50 hdc)
☐ **Rnds 4 to 5** 4 5	Repeat Rnds 2 and 3, once more	(48 hdc)
☐ **Rnds 6 to 8** 6 7 8	Ch 1; sc in each st around; join with sl st in first sc	(48 sc)
☐ **End**	Fasten off. The crotch needs no seam. If there is a small gap at either end of the crotch chain, close it with the yarn ends there.	

For your own crochet, gifts and handmade pieces you sell. Do not resell or share this PDF or copies of it.

Brace: make 2

Yarn B, cream.

☐ **Foundation**	Each brace is about 18½ in (47 cm) long. Row 4 has the buttonhole for the back; rows 77 and 83 have two for the front, so that the brace can be let out as the baby grows. With yarn B, ch 6.	
☐ **Row 1 (RS)**	Sc in 2nd ch from hook and in each ch across	(5 sc)
☐ **Rows 2 to 3**	Ch 1, turn; sc in each st across	(5 sc)
	2 3	
☐ **Row 4**	Ch 1, turn; sc in next st, ch 3, skip next 3 sts, sc in next st	(2 sc, 1 ch-3 sp)
☐ **Row 5**	Ch 1, turn; sc in next st, 3 sc in next ch-3 sp, sc in next st	(5 sc)
☐ **Rows 6 to 76**	Ch 1, turn; sc in each st across	(5 sc)
	6 7 8 9 10 11 12 13 14 15 16 17 18 19 20 21 22 23 24 25 26 27 28 29 30 31 32 33 34 35 36 37 38 39 40 41 42 43 44 45 46 47 48 49 50 51 52 53 54 55 56 57 58 59 60 61 62 63 64 65 66 67 68 69 70 71 72 73 74 75 76	
☐ **Row 77**	Ch 1, turn; sc in next st, ch 3, skip next 3 sts, sc in next st	(2 sc, 1 ch-3 sp)
☐ **Row 78**	Ch 1, turn; sc in next st, 3 sc in next ch-3 sp, sc in next st	(5 sc)
☐ **Rows 79 to 84**	Repeat Rows 73 to 78, once more	(5 sc)
	79 80 81 82 83 84	
☐ **Rows 85 to 86**	Ch 1, turn; sc in each st across	(5 sc)
	85 86	
☐ **End**	Fasten off.	

Assembly

1. Shoulders: lay the front on the back with right sides together and the side edges level. With new lengths of yarn A, about 12 in (30 cm) long, sew the 13 sts of row 39 of each side of the front to the 13 sts at each end of row 39 of the back; the middle 16 sts of the back stay free for the neck.

2. Placket: work the buttonhole band on the left side and the button band on the right side, as written above. At the foot of the opening lie the 4 unworked sts of row 20. Lay the lower end of the button band, its 5 row ends, behind these 4 sts on the inside and sew it to them with a new length of yarn A, about 8 in (20 cm) long; then lay the lower end of the buttonhole band over them on the outside, so that it covers the button band, and sew it down with its own end.

3. Collar: work it now, as written above.

4. Shirt buttons: the 2 buttonholes lie over sts 3 and 4 and over sts 11 and 12 of row 1 of the button band. Sew the 2 small buttons there to the outside of the button band, on row 3 of it. Sew each button on with the sewing thread, fasten the thread off, and sew through it a second time with a new thread: it must hold a baby's pull. See that each one is firm before every wear.

5. Pocket: hold it with the edge of yarn B uppermost, and lay it on the outside of the left side of the front (as worn), its lower edge along the top of row 19 of the front, over sts 6 to 13 of the row, counted from the left side edge. With a new length of yarn A, about 24 in (60 cm) long, sew it down along the two sides and the lower edge with small stitches over its edge, about one to each row and one to each st: bring the needle up through the pocket just inside

For your own crochet, gifts and handmade pieces you sell. Do not resell or share this PDF or copies of it.

its edge and put it down through the front just outside the edge; at the two ends of the last row, the row of yarn B, sew with yarn B: at one side with the end left there, at the other with a new length of about 8 in (20 cm). Leave the top open.

6. Sleeves: count 14 rows down from the shoulder seam on each side edge of the body, front and back, and place a marker at the lower edge of the last row counted. With right sides together, put the middle of the top edge of a sleeve, between sts 17 and 18 of its last row, at each shoulder seam and its two ends at the markers. With new lengths of yarn A, about 24 in (60 cm) long, sew the 34 sts of the top edge to the 28 row ends between the markers.

7. Sides and sleeves: with new lengths of yarn A, about 28 in (70 cm) long, sew each side seam from the marker down to the hem, row to row, and each sleeve seam from the underarm down to the edge of the sleeve, row to row.

8. Shorts waist: turn rnds 1 to 3 of the shorts body to the inside along the ridge at rnd 4, so that the foundation chain lies behind rnd 6. With a new length of yarn B, about 58 in (145 cm) long, sew each of the 88 chs of the foundation chain to the back of the st of rnd 6 that lies in front of it, so that nothing shows on the outside; leave about 2 in (5 cm) open at the middle of the back, and leave the rest of the yarn hanging there.

9. Elastic: cut a piece ½ in (12 mm) wide and 18½ in (47 cm) long, draw it through the casing with a safety pin, lap its two ends 1 in (2.5 cm) and pin the lap with a safety pin. The elastic is now 17½ in (44.5 cm) around, 1 in (2.5 cm) less than the waist: try it on, and lap the ends a little more or less as you like. Then sew the lapped ends together firmly with sewing thread, take the pin out, and sew the rest of the casing shut with the yarn left hanging.

10. Shorts buttons: rnd 8 of the shorts body, the second rnd of yarn A, has 88 sts; the middle of the back lies between its last and its first st and the middle of the front between sts 44 and 45. Sew the 4 large buttons to the outside of rnd 8, over sts 6 and 83 at the back and over sts 38 and 51 at the front. Sew each button on with the sewing thread, fasten the thread off, and sew through it a second time with a new thread: it must hold a baby's pull. See that each one is firm before every wear.

11. Braces: button the end with row 4 to a back button and the other end to a front button, the braces crossed at the back: the brace from the back button on the right half goes over the left shoulder to the front button on the left half, and the other goes the other way.

Finishing

- Weave in all the ends. Wash as the yarn label says and lay flat to the measurements to dry.

In all: 2 pieces; 8,496 stitches.

Found a mistake in this pattern? Tell us at flossfield.com, under Make a request.

For your own crochet, gifts and handmade pieces you sell. Do not resell or share this PDF or copies of it.