Cow costume outfit for a baby

6-12 months, to fit chest 18 in (45.5 cm) · US terms



Finished size

About 18½ in (47 cm) at the for a waist of and about 21¾ in (55 cm) round the cardigan's chest

To fit a chest of 18 in (45.5 cm) and a hip of 19 in (48.5 cm), head 17½ in (44.5 cm)

Skill

Intermediate

Color changes within rows, simple shaping, seams

Yarn

Light (3), 4 colors

Hook

4.5 mm (US 7)

Gauge

16 stitches and 13½ rows to 4 in (10 cm)

In half double crochet (UK half treble).

What you need

Yarn A: white, main color	**about 800 yd (732 m), an estimate**
Yarn B: charcoal, contrast	**about 65 yd (59 m), an estimate**
Yarn C: blush, color 3	**about 135 yd (123 m), an estimate**
Yarn D: oat, color 4	**about 10 yd (9 m), an estimate**

By weight: about 400 g in all, an estimate, where 100 g is 250 yd (229 m).

Hook: 4.5 mm (US 7), or the size that gives you the gauge. Also: yarn needle, scissors, tape measure, stitch markers, 4 buttons, 5/8 in (15 mm) across, 20 in (51 cm) of elastic ½ in (12 mm) wide (enough for any size; the finishing says how long a piece to cut), safety pins and sewing thread and a sewing needle.

To find how many balls: divide by the length on your yarn's label and round up. Buy them from one dye lot. The estimate is from the stitches of this size at this gauge.

Sizes

Size	Chest	Yarn, an estimate	Waist it is for	Cardigan chest (buttoned)	Cardigan length	Armhole depth	Sleeve	Back neck	Pants around the hips	Pants waist to crotch	Pants around each leg at the top	Pants around each cuff	Pants leg from the crotch	Hat around	Hat from the crown to the edge
Newborn	14 in (35.5 cm)	about 630 yd (576 m)	13½ in (34.5 cm)	17¾ in (45 cm)	8¾ in (22 cm)	3½ in (9 cm)	4¾ in (12 cm)	4 in (10 cm)	17 in (43 cm)	6¼ in (16 cm)	10 in (25.5 cm)	6 in (15 cm)	4¾ in (12 cm)	13 in (33 cm)	5 in (12.5 cm)
0-3 months	16 in (40.5 cm)	about 770 yd (704 m)	16½ in (42 cm)	19¾ in (50 cm)	9½ in (24 cm)	3¾ in (9.5 cm)	5½ in (14 cm)	4 in (10 cm)	20 in (51 cm)	6¾ in (17 cm)	11½ in (29 cm)	6½ in (16.5 cm)	5¾ in (14.5 cm)	14 in (35.5 cm)	5½ in (14 cm)

For your own crochet, gifts and handmade pieces you sell. Do not resell or share this PDF or copies of it.

3-6 months	17 in (43 cm)	about 875 yd (800 m)	17½ in (44.5 cm)	20¾ in (52.5 cm)	10½ in (26.5 cm)	4 in (10 cm)	6 in (15 cm)	4½ in (11.5 cm)	21 in (53.5 cm)	7½ in (19 cm)	12½ in (32 cm)	6½ in (16.5 cm)	6½ in (16.5 cm)	15 in (38 cm)	6 in (15 cm)
6-12 months (this file)	**18 in (45.5 cm)**	**about 1,010 yd (924 m)**	**18½ in (47 cm)**	**21¾ in (55 cm)**	**11¼ in (28.5 cm)**	**4¼ in (11 cm)**	**7 in (18 cm)**	**4½ in (11.5 cm)**	**22 in (56 cm)**	**8 in (20.5 cm)**	**13 in (33 cm)**	**7 in (18 cm)**	**7¾ in (19.5 cm)**	**16 in (40.5 cm)**	**6¼ in (16 cm)**
12-18 months	19 in (48.5 cm)	about 1,135 yd (1,038 m)	19½ in (49.5 cm)	22¾ in (58 cm)	12 in (30.5 cm)	4½ in (11.5 cm)	7½ in (19 cm)	4½ in (11.5 cm)	23 in (58.5 cm)	8¾ in (22 cm)	13½ in (34.5 cm)	7 in (18 cm)	9 in (23 cm)	17 in (43 cm)	6½ in (16.5 cm)
18-24 months	20 in (51 cm)	about 1,270 yd (1,161 m)	20 in (51 cm)	23¾ in (60.5 cm)	12¾ in (32.5 cm)	4¾ in (12 cm)	7¾ in (19.5 cm)	5 in (12.5 cm)	24 in (61 cm)	9 in (23 cm)	14 in (35.5 cm)	7½ in (19 cm)	10¼ in (26 cm)	18 in (45.5 cm)	7 in (18 cm)

Schematic

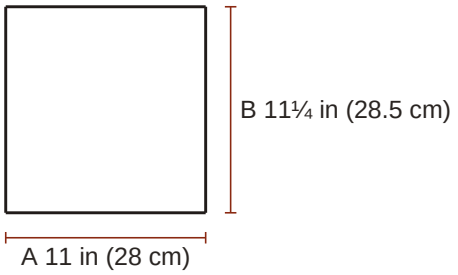

Back
A the width
B from top to bottom

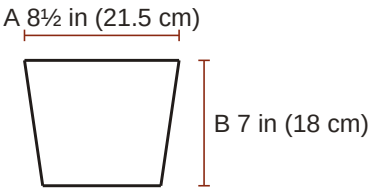

Sleeve
A half the top of the sleeve
B the sleeve

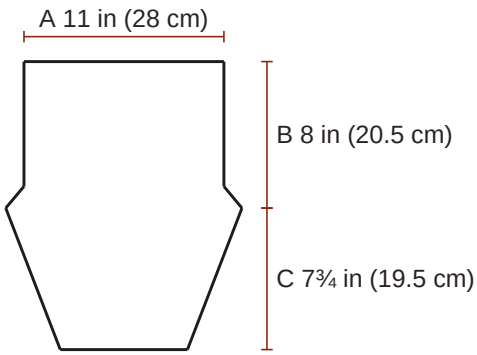

Pants leg
A half the cardigan chest (buttoned)
B the pants waist to crotch
C the pants waist to crotch

Gauge

16 stitches and 13½ rows to 4 in (10 cm) in half double crochet.

> **The swatch.** A test piece to measure and pull out. It is not the start of the pattern. Ch 25; begin in the 2nd ch from the hook and work 20 rows of half double crochet on 24 sts, about 6 in (15 cm) wide and 6 in (15 cm) high, and measure 4 in (10 cm) in the middle. Use a larger hook if your swatch is small, a smaller one if it is large. Ribs: 16 sts to 4 in (10 cm); the row of double crochet (UK: treble) is about ½ in (1.3 cm) high and each row of post stitches about 3/8 in (1 cm), so the 3 rows of a rib are about 1¼ in (3 cm) deep. Single crochet (UK: double crochet): about 18.5 rows or rounds to 4 in (10 cm).

For your own crochet, gifts and handmade pieces you sell. Do not resell or share this PDF or copies of it.

Notes

- Baby sizes, chosen by the chest; the pants by the hip.
- The chest of the finished cardigan is 3¾ in (9.5 cm) wider than the body measurement at each size. No fit is promised beyond the measurements given. Around the hips the pants are 3 in (7.5 cm) wider than the body measurement, for the diaper, and the elastic draws the waist in. The hat is a little smaller around than the head, and stretches.
- The cardigan and the legs of the pants are worked back and forth in rows from the lower edge up; odd-numbered rows are right side rows. The waistband, the hat, the ears and the horns are worked in rounds. The rounds are not turned; the right side always faces you.
- The chain at the start of a row or round (ch 1 for single and half double crochet, ch 2 for double crochet) never counts as a stitch. Work the first stitch into the stitch at its base.
- In rows, the last stitch goes into the last stitch of the row below, never into the turning chain.
- A decrease counts as one stitch.
- Patches: where a row says "with A" and "with B", the stitches are worked in those yarns in the order in which the row meets them. Use a separate small ball for each patch and for the white on each side of it. Change yarn on the last yarn over of the stitch before the new color, with the old yarn hanging to the wrong side; pick up the new yarn from under the old one, so that the two cross and leave no hole. In such a row the two increases, one at each end, are worked with A. In a row that names no yarn, work every stitch with the yarn that the line of colors gives.
- To work into a chain space, put the hook under the whole chain.
- For the ribs, work around the post (the upright part) of the stitch below, not into its top. Rib rows are turned like the others: what is in front on one side is behind on the other.
- Sew every part on firmly, through the fabric several times, weave the ends in well, and look at them before each wear.
- The outfit is for a baby who is awake and watched the whole time, for a short wear; take it off before a nap and in a car seat.
- Color changes in rows: work the last yarn over of the last stitch of the row before with the new yarn. Cut the old yarn, leaving an end of about 6 in (15 cm), or, if it is needed again at the same edge within 6 rows and that edge is straight, carry it loosely up the edge.
- Color changes in rounds: work the sl st that joins the round before with the new yarn. Cut the old yarn, leaving an end of about 6 in (15 cm), or, if it is needed again within 6 rnds, carry it loosely up the inside at the join.
- In back loop only: insert the hook under the loop of the stitch that is farther from you, and leave the nearer loop free.

Instructions

6-12 months, to fit chest 18 in (45.5 cm). US terms.

ch chain, **sl st** slip stitch, **sc** single crochet (UK double crochet), **hdc** half double crochet (UK half treble), **dc** double crochet (UK treble), **Rnd** round, **st** stitch, **sp** space.

RS right side, the one that shows, **WS** wrong side, the back.

2 hdc in next st: both in one stitch. **hdc in next 27 sts**: one in each. **ch-2 sp**: the gap under two chains; the hook goes in the gap.

[ ] 22 times: work what is inside 22 times in all.

(44 dc): the stitches you have when the row is done. **How to read a pattern**.

For your own crochet, gifts and handmade pieces you sell. Do not resell or share this PDF or copies of it.

Special stitches

sc2tog (single crochet 2 stitches together (UK double crochet 2 together)): Insert the hook in the next stitch and pull up a loop, insert the hook in the following stitch and pull up a loop (3 loops on the hook); yarn over and pull through all 3 loops.

hdc2tog (half double crochet 2 stitches together (UK half treble 2 together)): [yarn over, insert the hook in the next stitch and pull up a loop] twice (5 loops on the hook); yarn over and pull through all 5 loops.

fpdc (front post double crochet (UK front post treble)): Yarn over, insert the hook from the front to the back and to the front again around the post of the stitch named, pull up a loop, [yarn over and pull through 2 loops] twice. The front is the side that faces you. A post stitch takes the place of the stitch it is worked around: do not work into the top of that stitch as well.

bpdc (back post double crochet (UK back post treble)): As fpdc, but insert the hook from the back to the front and to the back again around the post.

Back

Yarns in order of use: C, blush; A, white; B, charcoal.

☐ **Foundation**	With yarn C, ch 46. Colors: rows 1 to 3 yarn C; rows 4 to 37 yarn A.	
☐ **Row 1 (RS)**	Dc in 3rd ch from hook and in each ch across	(44 dc)
☐ **Rows 2 to 3** 2 3	Ch 2, turn; **[**fpdc around next st, bpdc around next st**] 22 times**	(22 fpdcs, 22 bpdcs)
☐ **Rows 4 to 6** 4 5 6	Ch 1, turn; hdc in each st across	(44 hdc)
☐ **Row 7**	Ch 1, turn; with A hdc in next 27 sts, with B hdc in next 3 sts, with A hdc in next 14 sts	(44 hdc)
☐ **Row 8**	Ch 1, turn; with A hdc in next 12 sts, with B hdc in next 6 sts, with A hdc in next 26 sts	(44 hdc)
☐ **Row 9**	Ch 1, turn; with A hdc in next 25 sts, with B hdc in next 8 sts, with A hdc in next 11 sts	(44 hdc)
☐ **Row 10**	Ch 1, turn; with A hdc in next 10 sts, with B hdc in next 9 sts, with A hdc in next 25 sts	(44 hdc)
☐ **Row 11**	Ch 1, turn; with A hdc in next 25 sts, with B hdc in next 9 sts, with A hdc in next 10 sts	(44 hdc)
☐ **Row 12**	Ch 1, turn; with A hdc in next 10 sts, with B hdc in next 8 sts, with A hdc in next 26 sts	(44 hdc)
☐ **Row 13**	Ch 1, turn; with A hdc in next 26 sts, with B hdc in next 7 sts, with A hdc in next 11 sts	(44 hdc)
☐ **Row 14**	Ch 1, turn; with A hdc in next 12 sts, with B hdc in next 5 sts, with A hdc in next 20 sts, with B hdc in next 3 sts, with A hdc in next 4 sts	(44 hdc)
☐ **Row 15**	Ch 1, turn; with A hdc in next 3 sts, with B hdc in next 6 sts, with A hdc in next 19 sts, with B hdc in next 3 sts, with A hdc in next 13 sts	(44 hdc)
☐ **Row 16**	Ch 1, turn; with A hdc in next 35 sts, with B hdc in next 6 sts, with A hdc in next 3 sts	(44 hdc)

For your own crochet, gifts and handmade pieces you sell. Do not resell or share this PDF or copies of it.

☐ **Row 17**	Ch 1, turn; with A hdc in next 3 sts, with B hdc in next 7 sts, with A hdc in next 34 sts	(44 hdc)
☐ **Row 18**	Ch 1, turn; with A hdc in next 34 sts, with B hdc in next 6 sts, with A hdc in next 4 sts	(44 hdc)
☐ **Row 19**	Ch 1, turn; with A hdc in next 5 sts, with B hdc in next 4 sts, with A hdc in next 35 sts	(44 hdc)
☐ **Rows 20 to 21** 20 21	Ch 1, turn; hdc in each st across	(44 hdc)
☐ **Row 22**	Ch 1, turn; with A hdc in next 6 sts, with B hdc in next 3 sts, with A hdc in next 35 sts	(44 hdc)
☐ **Row 23**	Ch 1, turn; with A hdc in next 34 sts, with B hdc in next 5 sts, with A hdc in next 5 sts	(44 hdc)
☐ **Row 24**	Ch 1, turn; with A hdc in next 5 sts, with B hdc in next 6 sts, with A hdc in next 33 sts	(44 hdc)
☐ **Row 25**	Ch 1, turn; with A hdc in next 13 sts, with B hdc in next 3 sts, with A hdc in next 16 sts, with B hdc in next 7 sts, with A hdc in next 5 sts	(44 hdc)
☐ **Row 26**	Ch 1, turn; with A hdc in next 6 sts, with B hdc in next 6 sts, with A hdc in next 15 sts, with B hdc in next 6 sts, with A hdc in next 11 sts	(44 hdc)
☐ **Row 27**	Ch 1, turn; with A hdc in next 10 sts, with B hdc in next 8 sts, with A hdc in next 14 sts, with B hdc in next 5 sts, with A hdc in next 7 sts	(44 hdc)
☐ **Row 28**	Ch 1, turn; with A hdc in next 8 sts, with B hdc in next 3 sts, with A hdc in next 15 sts, with B hdc in next 9 sts, with A hdc in next 9 sts	(44 hdc)
☐ **Row 29**	Ch 1, turn; with A hdc in next 9 sts, with B hdc in next 9 sts, with A hdc in next 26 sts	(44 hdc)
☐ **Row 30**	Ch 1, turn; with A hdc in next 27 sts, with B hdc in next 8 sts, with A hdc in next 9 sts	(44 hdc)
☐ **Row 31**	Ch 1, turn; with A hdc in next 10 sts, with B hdc in next 7 sts, with A hdc in next 27 sts	(44 hdc)
☐ **Row 32**	Ch 1, turn; with A hdc in next 28 sts, with B hdc in next 5 sts, with A hdc in next 11 sts	(44 hdc)
☐ **Row 33**	Ch 1, turn; with A hdc in next 12 sts, with B hdc in next 3 sts, with A hdc in next 29 sts	(44 hdc)
☐ **Rows 34 to 37** 34 35 36 37	Ch 1, turn; hdc in each st across	(44 hdc)
☐ **End**	The back measures about 11 in (28 cm) wide and 11¼ in (28.5 cm) long. Fasten off.	

For your own crochet, gifts and handmade pieces you sell. Do not resell or share this PDF or copies of it.

Right front

Yarns in order of use: C, blush; A, white; B, charcoal.

☐ **Foundation**	The front edge is at the beginning of the right side rows. With yarn C, ch 22. Colors: rows 1 to 3 yarn C; rows 4 to 37 yarn A.	
☐ **Row 1 (RS)**	Dc in 3rd ch from hook and in each ch across	(20 dc)
☐ **Rows 2 to 3** 2 3	Ch 2, turn; **[**fpdc around next st, bpdc around next st**] 10 times**	(10 fpdcs, 10 bpdcs)
☐ **Rows 4 to 6** 4 5 6	Ch 1, turn; hdc in each st across	(20 hdc)
☐ **Row 7**	Ch 1, turn; with A hdc in next 14 sts, with B hdc in next 3 sts, with A hdc in next 3 sts	(20 hdc)
☐ **Row 8**	Ch 1, turn; with A hdc in next 2 sts, with B hdc in next 5 sts, with A hdc in next 13 sts	(20 hdc)
☐ **Row 9**	Ch 1, turn; with A hdc in next 12 sts, with B hdc in next 6 sts, with A hdc in next 2 sts	(20 hdc)
☐ **Row 10**	Ch 1, turn; with A hdc in next 2 sts, with B hdc in next 7 sts, with A hdc in next 11 sts	(20 hdc)
☐ **Row 11**	Ch 1, turn; with A hdc in next 11 sts, with B hdc in next 6 sts, with A hdc in next 3 sts	(20 hdc)
☐ **Row 12**	Ch 1, turn; with A hdc in next 4 sts, with B hdc in next 5 sts, with A hdc in next 11 sts	(20 hdc)
☐ **Row 13**	Ch 1, turn; with A hdc in next 12 sts, with B hdc in next 3 sts, with A hdc in next 5 sts	(20 hdc)
☐ **Rows 14 to 19** 14 15 16 17 18 19	Ch 1, turn; hdc in each st across	(20 hdc)
☐ **Row 20**	Ch 1, turn; with A hdc in next 13 sts, with B hdc in next 3 sts, with A hdc in next 4 sts	(20 hdc)
☐ **Row 21**	Ch 1, turn; with A hdc in next 3 sts, with B hdc in next 6 sts, with A hdc in next 11 sts	(20 hdc)
☐ **Row 22**	Ch 1, turn; with A hdc in next 11 sts, with B hdc in next 6 sts, with A hdc in next 3 sts	(20 hdc)
☐ **Row 23**	Ch 1, turn; with A hdc in next 3 sts, with B hdc in next 7 sts, with A hdc in next 10 sts	(20 hdc)
☐ **Row 24**	Ch 1, turn; with A hdc in next 10 sts, with B hdc in next 6 sts, with A hdc in next 4 sts	(20 hdc)
☐ **Row 25**	Ch 1, turn; with A hdc in next 5 sts, with B hdc in next 4 sts, with A hdc in next 11 sts	(20 hdc)

For your own crochet, gifts and handmade pieces you sell. Do not resell or share this PDF or copies of it.

☐ **Rows 26 to 29** 26 27 28 29	Ch 1, turn; hdc in each st across	(20 hdc)
☐ **Row 30**	Ch 1, turn; hdc in next 16 sts, leave the last 4 sts unworked. The neck edge is at the end of this row	(16 hdc)
☐ **Row 31**	Ch 1, turn; hdc2tog, hdc in each st across	(15 hdc)
☐ **Row 32**	Ch 1, turn; hdc in each st across to last 2 sts, hdc2tog	(14 hdc)
☐ **Row 33**	Ch 1, turn; hdc2tog, hdc in each st across	(13 hdc)
☐ **Rows 34 to 37** 34 35 36 37	Ch 1, turn; hdc in each st across	(13 hdc)
☐ **End**	This is the right front as worn. The 13 sts left are the shoulder. Fasten off.	

Left front

Yarns in order of use: C, blush; A, white; B, charcoal.

☐ **Foundation**	The front edge is at the end of the right side rows. With yarn C, ch 22. Colors: rows 1 to 3 yarn C; rows 4 to 37 yarn A.	
☐ **Row 1 (RS)**	Dc in 3rd ch from hook and in each ch across	(20 dc)
☐ **Rows 2 to 3** 2 3	Ch 2, turn; **[**fpdc around next st, bpdc around next st**] 10 times**	(10 fpdcs, 10 bpdcs)
☐ **Rows 4 to 12** 4 5 6 7 8 9 10 11 12	Ch 1, turn; hdc in each st across	(20 hdc)
☐ **Row 13**	Ch 1, turn; with A hdc in next 6 sts, with B hdc in next 3 sts, with A hdc in next 11 sts	(20 hdc)
☐ **Row 14**	Ch 1, turn; with A hdc in next 9 sts, with B hdc in next 6 sts, with A hdc in next 5 sts	(20 hdc)
☐ **Row 15**	Ch 1, turn; with A hdc in next 4 sts, with B hdc in next 8 sts, with A hdc in next 8 sts	(20 hdc)
☐ **Row 16**	Ch 1, turn; with A hdc in next 7 sts, with B hdc in next 9 sts, with A hdc in next 4 sts	(20 hdc)
☐ **Row 17**	Ch 1, turn; with A hdc in next 4 sts, with B hdc in next 9 sts, with A hdc in next 7 sts	(20 hdc)
☐ **Row 18**	Ch 1, turn; with A hdc in next 7 sts, with B hdc in next 8 sts, with A hdc in next 5 sts	(20 hdc)
☐ **Row 19**	Ch 1, turn; with A hdc in next 5 sts, with B hdc in next 7 sts, with A hdc in next 8 sts	(20 hdc)
☐ **Row 20**	Ch 1, turn; with A hdc in next 9 sts, with B hdc in next 5 sts, with A hdc in next 6 sts	(20 hdc)
☐ **Row 21**	Ch 1, turn; with A hdc in next 7 sts, with B hdc in next 3 sts, with A hdc in next 10 sts	(20 hdc)

For your own crochet, gifts and handmade pieces you sell. Do not resell or share this PDF or copies of it.

☐ **Rows 22 to 30** 22 23 24 25 26 27 28 29 30	Ch 1, turn; hdc in each st across	(20 hdc)
☐ **Row 31**	Ch 1, turn; hdc in next 16 sts, leave the last 4 sts unworked. The neck edge is at the end of this row	(16 hdc)
☐ **Row 32**	Ch 1, turn; hdc2tog, hdc in each st across	(15 hdc)
☐ **Row 33**	Ch 1, turn; hdc in each st across to last 2 sts, hdc2tog	(14 hdc)
☐ **Row 34**	Ch 1, turn; hdc2tog, hdc in each st across	(13 hdc)
☐ **Rows 35 to 37** 35 36 37	Ch 1, turn; hdc in each st across	(13 hdc)
☐ **End**	This is the left front as worn. The 13 sts left are the shoulder. Fasten off.	

Sleeve: make 2

Yarns in order of use: C, blush; A, white; B, charcoal.

☐ **Foundation**	With yarn C, ch 28. Colors: rows 1 to 3 yarn C; rows 4 to 22 yarn A.	
☐ **Row 1 (RS)**	Dc in 3rd ch from hook and in each ch across	(26 dc)
☐ **Rows 2 to 3** 2 3	Ch 2, turn; **[**fpdc around next st, bpdc around next st**] 13 times**	(13 fpdcs, 13 bpdcs)
☐ **Row 4**	Ch 1, turn; hdc in each st across	(26 hdc)
☐ **Row 5**	Ch 1, turn; 2 hdc in first st, hdc in each st across to last st, 2 hdc in last st	(28 hdc)
☐ **Row 6**	Ch 1, turn; hdc in each st across	(28 hdc)
☐ **Row 7**	Ch 1, turn; with A hdc in next 12 sts, with B hdc in next 3 sts, with A hdc in next 13 sts	(28 hdc)
☐ **Row 8**	Ch 1, turn; with A hdc in next 11 sts, with B hdc in next 6 sts, with A hdc in next 11 sts	(28 hdc)
☐ **Row 9**	Ch 1, turn; 2 hdc in first st, with A hdc in next 10 sts, with B hdc in next 6 sts, with A hdc in next 10 sts, 2 hdc in last st	(30 hdc)
☐ **Row 10**	Ch 1, turn; with A hdc in next 11 sts, with B hdc in next 7 sts, with A hdc in next 12 sts	(30 hdc)
☐ **Row 11**	Ch 1, turn; with A hdc in next 13 sts, with B hdc in next 6 sts, with A hdc in next 11 sts	(30 hdc)
☐ **Row 12**	Ch 1, turn; with A hdc in next 12 sts, with B hdc in next 4 sts, with A hdc in next 14 sts	(30 hdc)
☐ **Row 13**	Ch 1, turn; 2 hdc in first st, hdc in each st across to last st, 2 hdc in last st	(32 hdc)
☐ **Rows 14 to 16** 14 15 16	Ch 1, turn; hdc in each st across	(32 hdc)
☐ **Rows 17 to 20** 17 18 19 20	Repeat Rows 13 to 16, once more	(34 hdc)

For your own crochet, gifts and handmade pieces you sell. Do not resell or share this PDF or copies of it.

☐ **Rows 21 to 22** 21 22	Ch 1, turn; hdc in each st across	(34 hdc)
☐ **End**	The sleeve measures about 8½ in (21.5 cm) across the top and 7 in (18 cm) long. Fasten off.	

Button band

Yarn A, white.

☐ **Foundation**	Work this at step 2 of Assembly. With the right side facing, join yarn A at the neck end of the straight front edge of the left front (as worn), in the end of row 30. Ch 1; along rows 4 to 30 of the left front, met from the last of them, sc in the end of each of the next 3 rows, [2 sc in the end of the next row, sc in the end of each of the next 5 rows] 4 times (31 sc); along rows 1 to 3 of the left front, met from the last of them, sc in the end of the next row, 2 sc in the end of each of the next 2 rows (5 sc). There are 36 sc in all. This is row 1.	
☐ **Rows 2 to 4** 2 3 4	Ch 1, turn; sc in each st across	(36 sc)
☐ **End**	Fasten off.	

Buttonhole band

Yarn A, white.

☐ **Foundation**	Work this at step 2 of Assembly. With the right side facing, join yarn A at the lower corner of the right front (as worn), in the end of row 1. Ch 1; along rows 1 to 3 of the right front, 2 sc in the end of each of the first 2 rows, sc in the end of the next row (5 sc); along rows 4 to 29 of the right front, [sc in the end of each of the next 4 rows, 2 sc in the end of the next row] 5 times, sc in the end of the next row (31 sc). There are 36 sc in all. This is row 1.	
☐ **Row 2 (WS)**	Ch 1, turn; sc in next 2 sts, **[**ch 2, skip next 2 sts, sc in next 8 sts**] 3 times**, ch 2, skip next 2 sts, sc in next 2 sts	(28 sc, 4 ch-2 sps)
☐ **Row 3**	Ch 1, turn; sc in next 2 sts, **[**2 sc in next ch-2 sp, sc in next 8 sts**] 3 times**, 2 sc in next ch-2 sp, sc in next 2 sts	(36 sc)
☐ **Row 4**	Ch 1, turn; sc in each st across	(36 sc)
☐ **End**	Fasten off.	

For your own crochet, gifts and handmade pieces you sell. Do not resell or share this PDF or copies of it.

Neck edging

Yarn C, blush.

☐ **Foundation**	Work this at step 2 of Assembly, after the two bands. With the right side facing, join yarn C at the neck corner of the buttonhole band, in the end of row 4 of it. Ch 1; sc in the end of each of the 4 rows of the buttonhole band; sc in each of the 4 sts left unworked at the neck of the right front; along rows 30 to 37 of the right front, [sc in the end of each of the next 3 rows, 2 sc in the end of the next row] twice (10 sc); sc in each of the 18 free sts of row 37 of the back; along rows 31 to 37 of the left front, met from the last of them, sc in the end of the next row, [2 sc in the end of the next row, sc in the end of each of the next 2 rows] twice (9 sc); sc in each of the 4 sts left unworked at the neck of the left front; sc in the end of each of the 4 rows of the button band. There are 53 sc in all. This is row 1.	
☐ **Rows 2 to 3** 2 3	Ch 1, turn; sc in each st across	(53 sc)
☐ **End**	Fasten off.	

Right leg

Yarns in order of use: C, blush; A, white; B, charcoal.

☐ **Foundation**	With yarn C, ch 30. Colors: rows 1 to 3 yarn C; rows 4 to 50 yarn A.	
☐ **Row 1 (RS)**	Dc in 3rd ch from hook and in each ch across	(28 dc)
☐ **Rows 2 to 3** 2 3	Ch 2, turn; **[**fpdc around next st, bpdc around next st**] 14 times**	(14 fpdcs, 14 bpdcs)
☐ **Row 4**	Ch 1, turn; hdc in each st across	(28 hdc)
☐ **Row 5**	Ch 1, turn; 2 hdc in first st, hdc in each st across to last st, 2 hdc in last st	(30 hdc)
☐ **Rows 6 to 7** 6 7	Repeat Rows 4 and 5, once more	(32 hdc)
☐ **Row 8**	Ch 1, turn; with A hdc in next 17 sts, with B hdc in next 3 sts, with A hdc in next 12 sts	(32 hdc)
☐ **Row 9**	Ch 1, turn; 2 hdc in first st, with A hdc in next 10 sts, with B hdc in next 6 sts, with A hdc in next 14 sts, 2 hdc in last st	(34 hdc)
☐ **Row 10**	Ch 1, turn; 2 hdc in first st, with A hdc in next 14 sts, with B hdc in next 8 sts, with A hdc in next 10 sts, 2 hdc in last st	(36 hdc)
☐ **Row 11**	Ch 1, turn; with A hdc in next 12 sts, with B hdc in next 9 sts, with A hdc in next 15 sts	(36 hdc)
☐ **Row 12**	Ch 1, turn; 2 hdc in first st, with A hdc in next 14 sts, with B hdc in next 9 sts, with A hdc in next 11 sts, 2 hdc in last st	(38 hdc)
☐ **Row 13**	Ch 1, turn; with A hdc in next 14 sts, with B hdc in next 8 sts, with A hdc in next 16 sts	(38 hdc)
☐ **Row 14**	Ch 1, turn; 2 hdc in first st, with A hdc in next 16 sts, with B hdc in next 7 sts, with A hdc in next 13 sts, 2 hdc in last st	(40 hdc)

For your own crochet, gifts and handmade pieces you sell. Do not resell or share this PDF or copies of it.

☐ **Row 15**	Ch 1, turn; 2 hdc in first st, with A hdc in next 15 sts, with B hdc in next 5 sts, with A hdc in next 18 sts, 2 hdc in last st	(42 hdc)
☐ **Row 16**	Ch 1, turn; with A hdc in next 21 sts, with B hdc in next 3 sts, with A hdc in next 18 sts	(42 hdc)
☐ **Row 17**	Ch 1, turn; 2 hdc in first st, hdc in each st across to last st, 2 hdc in last st	(44 hdc)
☐ **Row 18**	Ch 1, turn; hdc in each st across	(44 hdc)
☐ **Rows 19 to 20** 19 20	Ch 1, turn; 2 hdc in first st, hdc in each st across to last st, 2 hdc in last st	(48 hdc)
☐ **Row 21**	Ch 1, turn; hdc in each st across	(48 hdc)
☐ **Rows 22 to 25** 22 23 24 25	Repeat Rows 20 and 21, 2 more times (50, 52 hdc at the ends of the repeats)	(52 hdc)
☐ **Rows 26 to 29** 26 27 28 29	Ch 1, turn; hdc2tog, hdc in each st across to last 2 sts, hdc2tog	(44 hdc)
☐ **Rows 30 to 32** 30 31 32	Ch 1, turn; hdc in each st across	(44 hdc)
☐ **Row 33**	Ch 1, turn; with A hdc in next 17 sts, with B hdc in next 3 sts, with A hdc in next 24 sts	(44 hdc)
☐ **Row 34**	Ch 1, turn; with A hdc in next 22 sts, with B hdc in next 6 sts, with A hdc in next 16 sts	(44 hdc)
☐ **Row 35**	Ch 1, turn; with A hdc in next 16 sts, with B hdc in next 6 sts, with A hdc in next 22 sts	(44 hdc)
☐ **Row 36**	Ch 1, turn; with A hdc in next 21 sts, with B hdc in next 7 sts, with A hdc in next 16 sts	(44 hdc)
☐ **Row 37**	Ch 1, turn; with A hdc in next 17 sts, with B hdc in next 6 sts, with A hdc in next 21 sts	(44 hdc)
☐ **Row 38**	Ch 1, turn; with A hdc in next 22 sts, with B hdc in next 4 sts, with A hdc in next 18 sts	(44 hdc)
☐ **Rows 39 to 50** 39 40 41 42 43 44 45 46 47 48 49 50	Ch 1, turn; hdc in each st across	(44 hdc)
☐ **End**	Fasten off.	

Left leg

Yarns in order of use: C, blush; A, white; B, charcoal.

☐ **Foundation**	With yarn C, ch 30. Colors: rows 1 to 3 yarn C; rows 4 to 50 yarn A.	
☐ **Row 1 (RS)**	Dc in 3rd ch from hook and in each ch across	(28 dc)
☐ **Rows 2 to 3** 2 3	Ch 2, turn; **[**fpdc around next st, bpdc around next st**] 14 times**	(14 fpdcs, 14 bpdcs)

For your own crochet, gifts and handmade pieces you sell. Do not resell or share this PDF or copies of it.

☐ **Row 4**	Ch 1, turn; hdc in each st across	(28 hdc)
☐ **Row 5**	Ch 1, turn; 2 hdc in first st, hdc in each st across to last st, 2 hdc in last st	(30 hdc)
☐ **Row 6**	Ch 1, turn; with A hdc in next 11 sts, with B hdc in next 3 sts, with A hdc in next 16 sts	(30 hdc)
☐ **Row 7**	Ch 1, turn; 2 hdc in first st, with A hdc in next 14 sts, with B hdc in next 5 sts, with A hdc in next 9 sts, 2 hdc in last st	(32 hdc)
☐ **Row 8**	Ch 1, turn; with A hdc in next 11 sts, with B hdc in next 6 sts, with A hdc in next 15 sts	(32 hdc)
☐ **Row 9**	Ch 1, turn; 2 hdc in first st, with A hdc in next 13 sts, with B hdc in next 7 sts, with A hdc in next 10 sts, 2 hdc in last st	(34 hdc)
☐ **Row 10**	Ch 1, turn; 2 hdc in first st, with A hdc in next 12 sts, with B hdc in next 6 sts, with A hdc in next 14 sts, 2 hdc in last st	(36 hdc)
☐ **Row 11**	Ch 1, turn; with A hdc in next 16 sts, with B hdc in next 5 sts, with A hdc in next 15 sts	(36 hdc)
☐ **Row 12**	Ch 1, turn; 2 hdc in first st, with A hdc in next 15 sts, with B hdc in next 3 sts, with A hdc in next 16 sts, 2 hdc in last st	(38 hdc)
☐ **Row 13**	Ch 1, turn; hdc in each st across	(38 hdc)
☐ **Rows 14 to 15** 14 15	Ch 1, turn; 2 hdc in first st, hdc in each st across to last st, 2 hdc in last st	(42 hdc)
☐ **Row 16**	Ch 1, turn; hdc in each st across	(42 hdc)
☐ **Rows 17 to 18** 17 18	Repeat Rows 15 and 16, once more	(44 hdc)
☐ **Rows 19 to 20** 19 20	Ch 1, turn; 2 hdc in first st, hdc in each st across to last st, 2 hdc in last st	(48 hdc)
☐ **Row 21**	Ch 1, turn; hdc in each st across	(48 hdc)
☐ **Rows 22 to 25** 22 23 24 25	Repeat Rows 20 and 21, 2 more times (50, 52 hdc at the ends of the repeats)	(52 hdc)
☐ **Rows 26 to 29** 26 27 28 29	Ch 1, turn; hdc2tog, hdc in each st across to last 2 sts, hdc2tog	(44 hdc)
☐ **Rows 30 to 31** 30 31	Ch 1, turn; hdc in each st across	(44 hdc)
☐ **Row 32**	Ch 1, turn; with A hdc in next 19 sts, with B hdc in next 3 sts, with A hdc in next 22 sts	(44 hdc)
☐ **Row 33**	Ch 1, turn; with A hdc in next 21 sts, with B hdc in next 6 sts, with A hdc in next 17 sts	(44 hdc)
☐ **Row 34**	Ch 1, turn; with A hdc in next 16 sts, with B hdc in next 8 sts, with A hdc in next 20 sts	(44 hdc)

For your own crochet, gifts and handmade pieces you sell. Do not resell or share this PDF or copies of it.

☐ **Row 35**	Ch 1, turn; with A hdc in next 20 sts, with B hdc in next 9 sts, with A hdc in next 15 sts	(44 hdc)
☐ **Row 36**	Ch 1, turn; with A hdc in next 15 sts, with B hdc in next 9 sts, with A hdc in next 20 sts	(44 hdc)
☐ **Row 37**	Ch 1, turn; with A hdc in next 21 sts, with B hdc in next 8 sts, with A hdc in next 15 sts	(44 hdc)
☐ **Row 38**	Ch 1, turn; with A hdc in next 16 sts, with B hdc in next 7 sts, with A hdc in next 21 sts	(44 hdc)
☐ **Row 39**	Ch 1, turn; with A hdc in next 22 sts, with B hdc in next 5 sts, with A hdc in next 17 sts	(44 hdc)
☐ **Row 40**	Ch 1, turn; with A hdc in next 18 sts, with B hdc in next 3 sts, with A hdc in next 23 sts	(44 hdc)
☐ **Rows 41 to 50** 41 42 43 44 45 46 47 48 49 50	Ch 1, turn; hdc in each st across	(44 hdc)
☐ **End**	Fasten off.	

Waistband

Yarn C, blush.

☐ **Foundation**	Work this at step 7 of Assembly. With the right side facing and the last rows of the legs uppermost, join yarn C in the st of row 50 of the left leg that lies next to the back seam: the last st of that row. Ch 1; sc in each of the 44 sts of row 50 of the left leg, then sc in each of the 44 sts of row 50 of the right leg (88 sc); join with sl st in first sc. This is rnd 1.	
☐ **Rnds 2 to 3** 2 3	Ch 1; sc in each st around; join with sl st in first sc	(88 sc)
☐ **Rnd 4**	Ch 1; sc in back loop only of each st around; join with sl st in first sc	(88 sc)
☐ **Rnds 5 to 6** 5 6	Ch 1; sc in each st around; join with sl st in first sc	(88 sc)
☐ **End**	Fasten off, leaving an end of about 58 in (145 cm) for sewing.	

Hat

Yarn A, white.

☐ **Foundation**	With yarn A, ch 3; join with sl st in first ch to form a ring. Colors: rnds 1 to 17 yarn A; rnds 18 to 20 yarn C.	
☐ **Rnd 1**	Ch 1; 8 hdc in ring; join with sl st in first hdc	(8 hdc)
☐ **Rnd 2**	Ch 1; 2 hdc in each of next 8 sts; join with sl st in first hdc	(16 hdc)
☐ **Rnd 3**	Ch 1; **[**hdc in next st, 2 hdc in next st**] 8 times**; join with sl st in first hdc	(24 hdc)
☐ **Rnd 4**	Ch 1; **[**hdc in next 2 sts, 2 hdc in next st**] 8 times**; join with sl st in first hdc	(32 hdc)
☐ **Rnd 5**	Ch 1; **[**hdc in next 3 sts, 2 hdc in next st**] 8 times**; join with sl st in first hdc	(40 hdc)

For your own crochet, gifts and handmade pieces you sell. Do not resell or share this PDF or copies of it.

☐ **Rnd 6**	Ch 1; hdc in each st around; join with sl st in first hdc	(40 hdc)
☐ **Rnd 7**	Ch 1; hdc in next 2 sts, **[**2 hdc in next st, hdc in next 4 sts**] 7 times**, 2 hdc in next st, hdc in next 2 sts; join with sl st in first hdc	(48 hdc)
☐ **Rnd 8**	Ch 1; hdc in each st around; join with sl st in first hdc	(48 hdc)
☐ **Rnd 9**	Ch 1; **[**hdc in next 5 sts, 2 hdc in next st**] 8 times**; join with sl st in first hdc	(56 hdc)
☐ **Rnd 10**	Ch 1; hdc in each st around; join with sl st in first hdc	(56 hdc)
☐ **Rnd 11**	Ch 1; hdc in next 4 sts, **[**2 hdc in next st, hdc in next 6 sts**] 7 times**, 2 hdc in next st, hdc in next 2 sts; join with sl st in first hdc	(64 hdc)
☐ **Rnds 12 to 17** 12 13 14 15 16 17	Ch 1; hdc in each st around; join with sl st in first hdc	(64 hdc)
☐ **Rnd 18**	Ch 2; dc in each st around; join with sl st in first dc	(64 dc)
☐ **Rnds 19 to 20** 19 20	Ch 2; **[**fpdc around next st, bpdc around next st**] 32 times**; join with sl st in first fpdc	(32 fpdcs, 32 bpdcs)
☐ **End**	Fasten off.	

Ear: make 2

Yarn A, white.

☐ **Foundation**	With yarn A, ch 3; join with sl st in first ch to form a ring.	
☐ **Rnd 1**	Ch 1; 6 sc in ring; join with sl st in first sc	(6 sc)
☐ **Rnd 2**	Ch 1; **[**sc in next st, 2 sc in next st**] 3 times**; join with sl st in first sc	(9 sc)
☐ **Rnd 3**	Ch 1; sc in next 2 sts, [2 sc in next st, sc in next 2 sts] twice, 2 sc in next st; join with sl st in first sc	(12 sc)
☐ **Rnd 4**	Ch 1; sc in next st, [2 sc in next st, sc in next 3 sts] twice, 2 sc in next st, sc in next 2 sts; join with sl st in first sc	(15 sc)
☐ **Rnd 5**	Ch 1; sc in next 14 sts, 2 sc in next st; join with sl st in first sc	(16 sc)
☐ **Rnds 6 to 7** 6 7	Ch 1; sc in each st around; join with sl st in first sc	(16 sc)
☐ **Rnd 8**	Ch 1; [sc in next 6 sts, sc2tog] twice; join with sl st in first sc	(14 sc)
☐ **Rnd 9**	Ch 1; [sc in next 5 sts, sc2tog] twice; join with sl st in first sc	(12 sc)
☐ **Rnd 10**	Ch 1; sc in each st around; join with sl st in first sc	(12 sc)
☐ **End**	The last rnd is the base. Fasten off, leaving an end of about 14 in (35 cm) for sewing. Do not stuff. Press it flat, with the joins up the middle of one side: that side is its back, with sts 4 to 9 of the last rnd in front and the other 6 sts behind.	

For your own crochet, gifts and handmade pieces you sell. Do not resell or share this PDF or copies of it.

Inner ear: make 2

Yarn C, blush.

☐ **Foundation**	With yarn C, ch 3; join with sl st in first ch to form a ring.	
☐ **Rnd 1**	Ch 1; 4 sc in ring; join with sl st in first sc	(4 sc)
☐ **Rnd 2**	Ch 1; [sc in next st, 2 sc in next st] twice; join with sl st in first sc	(6 sc)
☐ **Rnd 3**	Ch 1; [sc in next 2 sts, 2 sc in next st] twice; join with sl st in first sc	(8 sc)
☐ **Rnd 4**	Ch 1; [sc in next 3 sts, 2 sc in next st] twice; join with sl st in first sc	(10 sc)
☐ **Rnd 5**	Ch 1; sc in each st around; join with sl st in first sc	(10 sc)
☐ **Rnd 6**	Ch 1; [sc in next 3 sts, sc2tog] twice; join with sl st in first sc	(8 sc)
☐ **End**	The last rnd is the base. Fasten off, leaving an end of about 12 in (30 cm) for sewing. Do not stuff. Press it flat, with the joins up the middle of one side: that side is its back, with sts 3 to 6 of the last rnd in front and the other 4 sts behind.	

Horn: make 2

Yarn D, oat.

☐ **Foundation**	With yarn D, ch 3; join with sl st in first ch to form a ring.	
☐ **Rnd 1**	Ch 1; 6 sc in ring; join with sl st in first sc	(6 sc)
☐ **Rnd 2**	Ch 1; [sc in next 2 sts, 2 sc in next st] twice; join with sl st in first sc	(8 sc)
☐ **Rnds 3 to 6** 3 4 5 6	Ch 1; sc in each st around; join with sl st in first sc	(8 sc)
☐ **End**	The last rnd is the base. Fasten off, leaving an end of about 10 in (25 cm) for sewing. Do not stuff. Press it flat, with the joins up the middle of one side: that side is its back, with sts 3 to 6 of the last rnd in front and the other 4 sts behind.	

Hat patch

Yarn B, charcoal.

☐ **Foundation**	With yarn B, ch 3; join with sl st in first ch to form a ring.	
☐ **Rnd 1**	Ch 1; 6 sc in ring; join with sl st in first sc	(6 sc)
☐ **Rnd 2**	Ch 1; 2 sc in each of next 6 sts; join with sl st in first sc	(12 sc)
☐ **Rnd 3**	Ch 1; **[**sc in next st, 2 sc in next st**] 6 times**; join with sl st in first sc	(18 sc)
☐ **Rnd 4**	Ch 1; **[**sc in next 2 sts, 2 sc in next st**] 6 times**; join with sl st in first sc	(24 sc)
☐ **End**	Fasten off, leaving an end of about 16 in (40 cm) for sewing.	

Assembly

1. Shoulders: lay the fronts on the back with right sides together and the side edges level. With new lengths of yarn A, about 12 in (30 cm) long, sew the 13 sts of row 37 of each front to the 13 sts at each end of row 37 of the back; the middle 18 sts of the back stay free for the neck.

2. Bands: work the button band and the buttonhole band and then the neck edging, as written above.

For your own crochet, gifts and handmade pieces you sell. Do not resell or share this PDF or copies of it.

3. Sleeves: count 14 rows down from the shoulder seam on each side edge of the body, front and back, and place a marker at the lower edge of the last row counted. With right sides together, put the middle of the top edge of a sleeve, between sts 17 and 18 of its last row, at each shoulder seam and its two ends at the markers. With new lengths of yarn A, about 24 in (60 cm) long, sew the 34 sts of the top edge to the 28 row ends between the markers.

4. Sides and sleeves: with new lengths of yarn A, about 38 in (95 cm) long, sew each side seam from the marker down to the hem, row to row, and each sleeve seam from the underarm down to the cuff edge, row to row.

5. Buttons: lap the right front over the left, so that the buttonhole band lies on the button band. The 4 buttonholes lie over sts 3 and 4, 13 and 14, 23 and 24, 33 and 34 of row 1 of the button band, counted from the neck. Sew the 4 buttons there to the outside of the button band, between rows 2 and 3 of it. Sew each button on with the sewing thread, fasten the thread off, and sew through it a second time with a new thread: it must hold a baby's pull. See that each one is firm before every wear.

6. Pants: fold each leg lengthwise with the right side inside and sew its inner leg seam, the ends of rows 1 to 25 at one edge to the ends of rows 1 to 25 at the other, with a new length of yarn A, about 22 in (55 cm) long. Turn the legs right side out. With the right side facing and the cuff down, the right-hand edge of the right leg is its front edge, and the left-hand edge of the left leg is its front edge. Front seam: sew the front edge of the right leg to the front edge of the left leg, from row 26 up to row 50, 25 row ends to 25. Back seam: sew the two other edges together from row 26 up to row 50. Use new lengths of yarn A, about 22 in (55 cm) long, and take care that the four inner leg edges meet at the crotch.

7. Waistband: work it now, as written above. Turn rnds 4 to 6 of it to the inside along the ridge at rnd 4, and sew the 88 sts of rnd 6 to the backs of the 88 sts of rnd 1 with the end of the waistband; leave about 2 in (5 cm) open at the middle of the back, and leave the rest of the yarn hanging there.

8. Elastic: cut a piece ½ in (12 mm) wide and 18½ in (47 cm) long, draw it through the casing with a safety pin, lap its two ends 1 in (2.5 cm) and pin the lap with a safety pin. The elastic is now 17½ in (44.5 cm) around, 1 in (2.5 cm) less than the waist: try it on, and lap the ends a little more or less as you like. Then sew the lapped ends together firmly with sewing thread, take the pin out, and sew the rest of the casing shut with the yarn left hanging.

9. Hat patch: the rnds of the hat are counted from the crown, and the sts of a rnd from its first st, at the middle of the back; the middle of the front of rnd 13 lies between sts 32 and 33. Sew the hat patch flat to the outside of the hat with its own end, all round, its middle on rnd 13, over st 39.

10. Ears: with its yarn end sew the base of each ear closed, 6 sts to 6 sts, and the base of each inner ear, 4 sts to 4 sts. Lay an inner ear on the front of each ear (the side without the joins), the bases level and the tips pointing the same way, and sew it down all round with its own end. Sew the base of one ear along rnd 10 of the hat, over sts 12 to 17, and the base of the other over sts 40 to 45, the inner ear facing down and to the front, so that the ears point straight out to the two sides; sew all round each base with the end of the ear, and then a second time with a new length of yarn A, about 12 in (30 cm) long.

11. Horns: with its yarn end sew the base of each horn closed, 4 sts to 4 sts. The horns are flat and stand up between the ears: sew the bases to rnd 4 of the hat, over sts 7 to 10 and over sts 23 to 26, all round, with their ends, and then a second time with new lengths of yarn D, about 10 in (25 cm) long.

Finishing

- Weave in all the ends. Wash as the yarn label says and lay flat to the measurements to dry.

In all: 9 pieces.

Found a mistake in this pattern? Tell us at flossfield.com, under Make a request.

For your own crochet, gifts and handmade pieces you sell. Do not resell or share this PDF or copies of it.