Baby doll diaper, bib and booties

Baby doll, 12 in (30.5 cm) · US terms



Finished size
About 10½ in (26.5 cm) round the hip of the diaper and about 8¼ in (21 cm) from waist to waist

Skill
Easy
Basic stitches and simple shaping

Yarn
Light (3), 2 colors

Hook
4.5 mm (US 7)

Gauge
16 stitches and 13½ rows to 4 in (10 cm)
In half double crochet.

You will need

Yarn A: butter, main — **about 80 yd (73 m), an estimate**
Yarn B: aqua, contrast — **about 45 yd (41 m), an estimate**
Hook: 4.5 mm (US 7), or the size that gives you the gauge. Also: yarn needle, scissors, tape measure, 2 buttons, ½ in (12 mm) across, sewing thread and a sewing needle and pins.

To find how many balls: divide by the length on your yarn's label and round up. Buy them from one dye lot. The estimate is from the stitches of this size at this gauge.

Sizes

Size	Diaper around the hip (buttoned)	Diaper from waist to waist	Bib neck edge	Bib depth	Bootie length	Bootie around	Yarn, an estimate
Baby doll, 10 in (25.5 cm)	9 in (23 cm)	7¾ in (19.5 cm)	3¼ in (8.5 cm)	2¼ in (5.5 cm)	2 in (5 cm)	3½ in (9 cm)	about 105 yd (96 m)
Baby doll, 12 in (30.5 cm) (this file)	**10½ in (26.5 cm)**	**8¼ in (21 cm)**	**3¾ in (9.5 cm)**	**2¼ in (5.5 cm)**	**2¼ in (5.5 cm)**	**4 in (10 cm)**	**about 125 yd (114 m)**
Baby doll, 14 in (35.5 cm)	12 in (30.5 cm)	9¼ in (23.5 cm)	4¾ in (12 cm)	2¼ in (5.5 cm)	2¾ in (7 cm)	4½ in (11.5 cm)	about 145 yd (133 m)

For your own crochet, gifts and handmade pieces you sell. Do not resell or share this PDF or copies of it.

Schematic

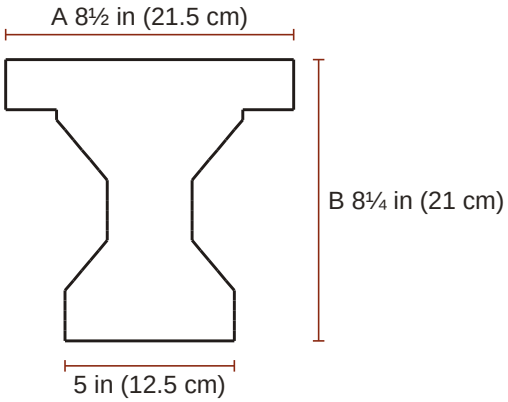

Diaper, open
A the diaper from waist to waist
B the diaper from waist to waist

Abbreviations

Written in US terms. Where the UK name differs it is given beside the US one.

hdc	half double crochet (UK htr, half treble)
sc	single crochet (UK dc, double crochet)
sl st	slip stitch (UK ss, slip stitch)
dc	double crochet (UK tr, treble)
ch	chain stitch
RS	right side
Rnd	round
st	stitch
sp	space

Special stitches

hdc2tog (half double crochet 2 stitches together (UK half treble 2 together)): [yarn over, insert the hook in the next stitch and pull up a loop] twice (5 loops on the hook); yarn over and pull through all 5 loops. It leaves 1 hdc2tog for the next row or round.

Gauge

16 stitches and 13½ rows to 4 in (10 cm) in half double crochet.

> **The swatch.** A test piece to measure and pull out. It is not the start of the pattern. Ch 25; begin in the 2nd ch from the hook and work 20 rows of half double crochet on 24 sts, about 6 in (15 cm) wide and 6 in (15 cm) high, and measure 4 in (10 cm) in the middle. Use a larger hook if your swatch is small, a smaller one if it is large. Double crochet (UK: treble): 16 sts and 8.5 rows to 4 in (10 cm). Single crochet (UK: double crochet): about 18.5 rows to 4 in (10 cm). A row of 5 dc shells is about 3/8 in (9 mm) deep.

For your own crochet, gifts and handmade pieces you sell. Do not resell or share this PDF or copies of it.

Before you start

- Baby doll sizes, by the height of the doll and its hip.
- No fit is promised beyond the measurements given. Measure the doll around the hip.
- Diaper: worked in rows from the back waist, between the legs, to the front waist, and folded between the legs. Row 1 is a right side row. The wings are the two ends of rows 1 to 5; they close over the front.
- Booties: the toe is worked in rounds with the right side facing, the foot in rows; the first row of the foot is a right side row.
- The chain at the start of a row or round (ch 1 for single and half double crochet, ch 2 for double crochet) never counts as a stitch. Work the first stitch into the stitch at its base.
- A decrease counts as one stitch.
- To work into a chain space, put the hook under the whole chain.
- The buttons are small parts: they are not for the doll of a child under three.
- Color changes in rows: work the last yarn over of the last stitch of the row before with the new yarn. Cut the old yarn, leaving an end of about 6 in (15 cm), or, if it is needed again at the same edge within 6 rows and that edge is straight, carry it loosely up the edge.
- To fit a doll with a hip of 10 in (25.5 cm) around.
- Diaper from waist to waist between the legs, without the edging 8¼ in (21 cm).

Instructions

Chosen: Baby doll, 12 in (30.5 cm). Square brackets [ ] hold a repeat: work what is inside as many times as it says. The count in round brackets at the end of a line is what that line leaves. Tick the box when a row is done. In UK terms hdc is half treble, sc is double crochet, sl st is slip stitch and dc is treble.

Diaper back

Yarn A, butter.

☐ **Foundation**	With yarn A, ch 35.	
☐ **Row 1 (RS)**	Hdc in 2nd ch from hook and in each ch across	**(34 hdc)**
☐ **Row 2**	Ch 1, turn; hdc in each st across	**(34 hdc)**
☐ **Row 3**	Ch 1, turn; hdc in next 2 sts, ch 2, skip next 2 sts, hdc in next 26 sts, ch 2, skip next 2 sts, hdc in next 2 sts	**(30 hdc, 2 ch-2 sps)**
☐ **Row 4**	Ch 1, turn; hdc in next 2 sts, 2 hdc in next ch-2 sp, hdc in next 26 sts, 2 hdc in next ch-2 sp, hdc in next 2 sts	**(34 hdc)**
☐ **Row 5**	Ch 1, turn; hdc in each st across	**(34 hdc)**
☐ **End**	Fasten off.	

For your own crochet, gifts and handmade pieces you sell. Do not resell or share this PDF or copies of it.

Diaper seat and front

Yarn A, butter.

☐ **Foundation**	With the wrong side of row 5 of the diaper back facing and that row uppermost, count from the right-hand end: skip 6 sts and join yarn A in the next st (st 7). Ch 1; hdc in that st and in each of the next 21 sts (22 hdc); leave the last 6 sts unworked. This is row 6, a wrong side row. The 6 sts left at each side are the lower edges of the two wings.	
☐ **Rows 7 to 12**	Ch 1, turn; hdc2tog, hdc in each st across to last 2 sts, hdc2tog	**(10 hdc)**

A box for each row, 7 to 12: tick them off as you go.

☐ 7 ☐ 8 ☐ 9 ☐ 10 ☐ 11 ☐ 12

☐ **Rows 13 to 18**	Ch 1, turn; hdc in each st across	**(10 hdc)**

A box for each row, 13 to 18: tick them off as you go.

☐ 13 ☐ 14 ☐ 15 ☐ 16 ☐ 17 ☐ 18

☐ **Rows 19 to 23**	Ch 1, turn; 2 hdc in first st, hdc in each st across to last st, 2 hdc in last st	**(20 hdc)**

A box for each row, 19 to 23: tick them off as you go.

☐ 19 ☐ 20 ☐ 21 ☐ 22 ☐ 23

☐ **Rows 24 to 28**	Ch 1, turn; hdc in each st across	**(20 hdc)**

A box for each row, 24 to 28: tick them off as you go.

☐ 24 ☐ 25 ☐ 26 ☐ 27 ☐ 28

☐ **End**	Fasten off.

For your own crochet, gifts and handmade pieces you sell. Do not resell or share this PDF or copies of it.

Diaper edging

Yarn B, aqua.

☐ **Foundation**	With the right side facing and the back waist (the foundation chain) uppermost, join yarn B in the ch at the right-hand end. Ch 1; along the back waist, in the free side of the 34 chs that row 1 is worked in (the ch skipped at the start of row 1 is left out), 2 sc in the first ch, sc in each of the next 32 chs, 2 sc in the last ch (36 sc); down the end of the wing: rows 1 to 5, sc in the end of each of the next 4 rows, 2 sc in the end of the next row (6 sc); along the lower edge of the wing, toward the seat, 2 sc in the first of the 6 sts left unworked, sc in each of the next 4 sts, skip the last st (6 sc); down the side to the front waist: rows 6 to 12, [sc in the end of the next row, 2 sc in the end of the next row] 3 times, sc in the end of the next row; rows 13 to 18, sc in the end of each of the next 4 rows, 2 sc in the end of the next row, sc in the end of the next row; rows 19 to 23, [sc in the end of the next row, 2 sc in the end of the next row] twice, sc in the end of the next row; rows 24 to 28, sc in the end of each of the next 4 rows, 2 sc in the end of the next row (30 sc); along the front waist, 2 sc in the first st, sc in each of the next 18 sts, 2 sc in the last st (22 sc); up the other side to the wing: rows 28 to 24, sc in the end of each of the next 4 rows, 2 sc in the end of the next row; rows 23 to 19, [sc in the end of the next row, 2 sc in the end of the next row] twice, sc in the end of the next row; rows 18 to 13, sc in the end of each of the next 4 rows, 2 sc in the end of the next row, sc in the end of the next row; rows 12 to 6, [sc in the end of the next row, 2 sc in the end of the next row] 3 times, sc in the end of the next row (30 sc); along the lower edge of the other wing, away from the seat, skip the first of the 6 sts left unworked, sc in each of the next 4 sts, 2 sc in the last st (6 sc); up the end of this wing: rows 5 to 1, sc in the end of each of the next 4 rows, 2 sc in the end of the next row (6 sc; 142 sc in all); join with sl st in first sc. This is rnd 1.	
☐ **Rnd 2**	Ch 1; sc in each st around; join with sl st in first sc	**(142 sc)**
☐ **End**	Fasten off.	

Bib

Yarn A, butter.

☐ **Foundation**	With yarn A, ch 17. Colors: rows 1 to 3 yarn A; row 4 yarn B.	
☐ **Row 1 (RS)**	Dc in 3rd ch from hook and in each ch across	**(15 dc)**
☐ **Row 2**	Ch 2, turn; **[**2 dc in next st**] 5 times**, **[**dc in next st, 2 dc in next st**] 5 times**	**(25 dc)**
☐ **Row 3**	Ch 2, turn; **[**dc in next st, 2 dc in next st**] 11 times**, dc in next 2 sts, 2 dc in next st	**(37 dc)**
☐ **Row 4**	Ch 1, turn; sc in first st, **[**skip next 2 sts, 5 dc in next st, skip next 2 sts, sc in next st**] 6 times**	**(7 sc, 30 dc)**
☐ **End**	Fasten off.	

For your own crochet, gifts and handmade pieces you sell. Do not resell or share this PDF or copies of it.

Bib edging

Yarn B, aqua.

☐ **Foundation**	With the right side of the bib facing and the foundation chain uppermost, join yarn B at the outer corner on the right, in the end of the shell row. Ch 1; along this short end, sc in the end of the shell row, 2 sc in the end of each of the next 3 rows (7 sc); along the neck, in the free side of the 15 chs that row 1 is worked in (the 2 chs skipped at the start of row 1 are left out), 2 sc in the first ch, sc in each of the next 13 chs, 2 sc in the last ch (17 sc); along the other short end, 2 sc in the end of each of the next 3 rows, sc in the end of the shell row (7 sc; 31 sc in all). This is row 1.	
☐ **Row 2**	Ch 1, turn; sc in each st across	**(31 sc)**
☐ **End**	Fasten off.	

Bib tie: make 2

Yarn B, aqua.

☐ **Foundation**	With yarn B, ch 33.	
☐ **Row 1**	Sl st in 2nd ch from hook and in each ch across	**(32 sl sts)**
☐ **End**	Each bib tie is about 7 in (18 cm) long (the slip stitches draw the chain in). Fasten off, leaving an end of about 6 in (15 cm) for sewing.	

Bootie toe: make 2

Yarn A, butter.

☐ **Foundation**	With yarn A, ch 3; join with sl st in first ch to form a ring.	
☐ **Rnd 1**	Ch 1; 8 hdc in ring; join with sl st in first hdc	**(8 hdc)**
☐ **Rnd 2**	Ch 1; 2 hdc in each of next 8 sts; join with sl st in first hdc	**(16 hdc)**
☐ **Rnds 3 to 4**	Ch 1; hdc in each st around; join with sl st in first hdc	**(16 hdc)**

A box for each round, 3 to 4: tick them off as you go.

☐ 3 ☐ 4

☐ **End**	Do not fasten off.	

Bootie foot: make 2

Yarn A, butter.

☐ **Foundation**	Go on from rnd 4 of the toe, with the right side facing: the foot is worked in rows on 11 sts, and 5 sts are left for the top of the foot.	
☐ **Row 5 (RS)**	Ch 1; hdc in next 11 sts, leave the last 5 sts unworked	**(11 hdc)**
☐ **Rows 6 to 8**	Ch 1, turn; hdc in each st across	**(11 hdc)**

A box for each row, 6 to 8: tick them off as you go.

☐ 6 ☐ 7 ☐ 8

☐ **End**	Fasten off, leaving an end of about 6 in (15 cm) for sewing. Fold the last row in half with the right side inside, st 1 on st 11 (the middle st, st 6, lies at the fold), and sew the two halves together, 5 sts to 5 sts. This is the heel.	

For your own crochet, gifts and handmade pieces you sell. Do not resell or share this PDF or copies of it.

Bootie cuff: make 2

Yarn B, aqua.

☐ **Foundation**	With the right side facing, join yarn B at the top of the heel seam. Ch 1; along the first side of the opening, sc in the end of each of the next 4 rows (4 sc), sc in each of the 5 sts left on rnd 4 of the toe, then along the other side, sc in the end of each of the next 4 rows (4 sc; 13 sc in all); join with sl st in first sc. This is rnd 1.	
☐ **Rnds 2 to 4**	Ch 1; sc in each st around; join with sl st in first sc	**(13 sc)**
	A box for each round, 2 to 4: tick them off as you go. 2 3 4	
☐ **Rnd 5**	Ch 1; 2 hdc in each of next 13 sts; join with sl st in first hdc	**(26 hdc)**
☐ **End**	Fasten off.	

Assembly

1. Diaper. Fold the diaper between the legs, right side out, so that the front waist lies level with the back waist, and bring the two wings around to the front: each wing lies over 6 sts of the front. Sew a button to the front with the sewing thread at each side, on row 26, two rows below the last row of the diaper: one on st 3 and one on st 18 of that row. The buttons go through the spaces of row 3 at the ends of the wings.

2. Bib. Sew one tie to each of the two corners where the neck meets a short end, with the end of yarn left on the tie. Pin the bib out flat when it is damp, and let it dry.

3. Booties. The ruffle of each cuff stands up around the ankle.

Finishing

- Weave in all the ends. Wash as the yarn label says and lay flat to the measurements to dry.

In all: 5 pieces; 1,167 stitches.

Found a mistake in this pattern? Tell us at flossfield.com, under Make a request.

For your own crochet, gifts and handmade pieces you sell. Do not resell or share this PDF or copies of it.