Baby hooded sweater

6-12 months · US terms



Finished size
About 22 in (56 cm) at the chest and about 10¾ in (27.5 cm) long
To fit a chest of 18 in (45.5 cm)

Skill
Easy
Basic stitches, simple shaping and seams.

Yarn
Light (3), 2 colors

Hook
4.5 mm (US 7)

Gauge
16 stitches and 13½ rows to 4 in (10 cm)
In half double crochet.

You will need

Yarn A: oat, the main color — **about 525 yd (480 m), an estimate**
Yarn B: camel, the second color — **about 65 yd (59 m), an estimate**
Hook: 4.5 mm (US 7). Also: yarn needle, scissors, tape measure and stitch markers.

To find how many balls: divide by the length on your yarn's label and round up. The estimate is from the stitches of this size at this gauge.

Sizes

Size	To fit chest	Chest	Length	Armhole depth	Sleeve	Upper sleeve	Back neck	Yarn, an estimate
0-3 months	16 in (40.5 cm)	20 in (51 cm)	8¾ in (22 cm)	3¾ in (9.5 cm)	5¼ in (13.5 cm)	7½ in (19 cm)	6½ in (16.5 cm)	about 465 yd (425 m)
3-6 months	17 in (43 cm)	20 in (51 cm)	10 in (25.5 cm)	4 in (10 cm)	6½ in (16.5 cm)	8 in (20.5 cm)	7 in (18 cm)	about 540 yd (493 m)
6-12 months (this file)	**18 in (45.5 cm)**	**22 in (56 cm)**	**10¾ in (27.5 cm)**	**4¼ in (11 cm)**	**7 in (18 cm)**	**8½ in (21.5 cm)**	**7½ in (19 cm)**	**about 590 yd (539 m)**
12-18 months	19 in (48.5 cm)	22 in (56 cm)	10¾ in (27.5 cm)	4½ in (11.5 cm)	7¾ in (19.5 cm)	9 in (23 cm)	8 in (20.5 cm)	about 620 yd (567 m)
18-24 months	20 in (51 cm)	24 in (61 cm)	11¼ in (28.5 cm)	4¾ in (12 cm)	7¾ in (19.5 cm)	9½ in (24 cm)	8½ in (21.5 cm)	about 670 yd (613 m)

For your own crochet, gifts and handmade pieces you sell. Do not resell or share this PDF.

Schematic

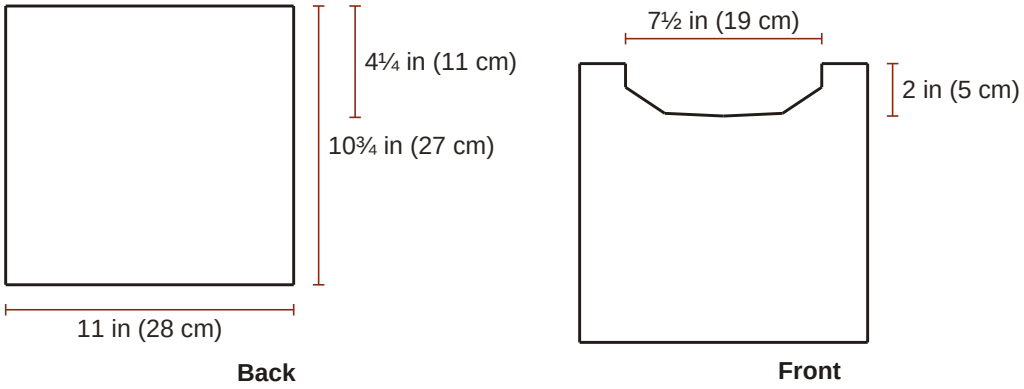

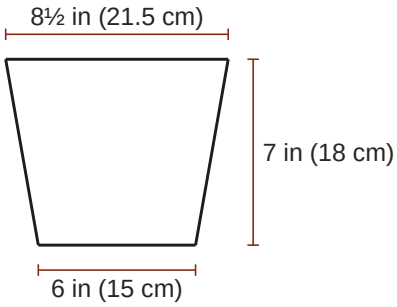

Abbreviations

Written in US terms. Where the UK name differs it is given beside the US one.

ch	chain
sl st	slip stitch (UK ss, slip stitch)
sc	single crochet (UK dc, double crochet)
hdc	half double crochet (UK htr, half treble)
st	stitch
rnd	round
RS	right side

Special stitches

hdc2tog (half double crochet 2 stitches together (UK half treble 2 together)): [Yarn over, insert the hook in the next stitch and pull up a loop] twice (5 loops on the hook); yarn over and pull through all 5 loops. It leaves 1 hdc2tog for the next row.

For your own crochet, gifts and handmade pieces you sell. Do not resell or share this PDF.

Gauge

16 stitches and 13½ rows to 4 in (10 cm) in half double crochet.

Ribs: worked sideways, 17 rows and 16 sts to 4 in (10 cm), so a rib of 5 sts is about 1¼ in (3 cm) deep.

> **The swatch.** A test piece to measure and pull out. It is not the start of the pattern. Ch 25; begin in the 2nd ch from the hook and work 20 rows of half double crochet on 24 sts, about 6 in (15 cm) wide and 6 in (15 cm) high, and measure 4 in (10 cm) in the middle. Use a larger hook if your swatch is small, a smaller one if it is large. Ribs: worked sideways, 17 rows and 16 sts to 4 in (10 cm), so a rib of 5 sts is about 1¼ in (3 cm) deep.

Before you start

- Baby sizes.
- The finished chest is from 3 in (7.5 cm) to 4 in (10 cm) wider than the body measurement, by the size. Choose by the finished measurement you like; no fit is promised beyond the measurements given.
- In back loop only: insert the hook under the loop of the stitch that is farther from you, and leave the nearer loop free.
- The turning chain (ch 1 for single and half double crochet) never counts as a stitch. Work the first stitch of every row into the first stitch, at the base of the turning chain.
- The chain at the start of a round never counts as a stitch. Work the first stitch of the round into the stitch at its base, where the round was joined.
- Odd-numbered rows are right side rows. Mark the right side of each piece with a stitch marker or a scrap of yarn.
- A decrease counts as one stitch.
- The ribs are worked sideways in back-loop single crochet (UK: double crochet). The body and sleeves are worked up from a long edge, one stitch in the end of each rib row. The rib draws in: it is a little narrower than the body above it.
- Stitches worked evenly along row ends: about 6 sc in every 5 rows.
- Sew every seam with the yarn needle and yarn A.
- The neck has no opening and must stretch over the head: work the neckband loosely, chain the hood loosely and sew it on loosely.

Instructions

Chosen: 6-12 months. The count in round brackets at the end of a line is what that line leaves. Tick the box when a row is done. In UK terms sl st is slip stitch, sc is double crochet and hdc is half treble.

Hem rib: make 2, one for the back and one for the front

Yarn B, camel.

☐ **Foundation**	With yarn B, ch 6.	
☐ **Row 1 (RS)**	Sc in 2nd ch from hook and in each ch across	**(5 sc)**
☐ **Rows 2 to 44**	Ch 1, turn; sc in back loop only of each st across	**(5 sc)**

A box for each row, 2 to 44: tick them off as you go.

2 3 4 5 6 7 8 9 10 11 12 13 14 15 16 17 18 19 20 21 22 23 24 25 26 27 28 29 30
31 32 33 34 35 36 37 38 39 40 41 42 43 44

☐ **End** Fasten off.

For your own crochet, gifts and handmade pieces you sell. Do not resell or share this PDF.

Back

Yarn A, oat.

☐ **Foundation**	Hold a hem rib with one long edge at the top. Join yarn A at the right-hand end of that edge.	
☐ **Row 1 (RS)**	Ch 1, sc in the end of each rib row across	**(44 sc)**
☐ **Rows 2 to 32**	Ch 1, turn; hdc in each st across	**(44 hdc)**

A box for each row, 2 to 32: tick them off as you go.

☐ 2 ☐ 3 ☐ 4 ☐ 5 ☐ 6 ☐ 7 ☐ 8 ☐ 9 ☐ 10 ☐ 11 ☐ 12 ☐ 13 ☐ 14 ☐ 15 ☐ 16 ☐ 17 ☐ 18 ☐ 19 ☐ 20 ☐ 21 ☐ 22 ☐ 23 ☐ 24 ☐ 25 ☐ 26 ☐ 27 ☐ 28 ☐ 29 ☐ 30 ☐ 31 ☐ 32

☐ **End**	The back measures about 11 in (28 cm) wide and 10¾ in (27.5 cm) long. Fasten off.	

Front

Yarn A, oat.

☐ **Foundation**	Hold a hem rib with one long edge at the top. Join yarn A at the right-hand end of that edge.	
☐ **Row 1 (RS)**	Ch 1, sc in the end of each rib row across	**(44 sc)**
☐ **Rows 2 to 25**	Ch 1, turn; hdc in each st across	**(44 hdc)**

A box for each row, 2 to 25: tick them off as you go.

☐ 2 ☐ 3 ☐ 4 ☐ 5 ☐ 6 ☐ 7 ☐ 8 ☐ 9 ☐ 10 ☐ 11 ☐ 12 ☐ 13 ☐ 14 ☐ 15 ☐ 16 ☐ 17 ☐ 18 ☐ 19 ☐ 20 ☐ 21 ☐ 22 ☐ 23 ☐ 24 ☐ 25

☐ **End**	Do not fasten off.	

Front, first side of the neck

Yarn A, oat.

☐ **Foundation**	Go on from row 25 of the front. This is the right side as worn. The neck edge is at the end of the next row.	
☐ **Row 26**	Ch 1, turn; hdc in next 12 sts, leave the last 32 sts unworked	**(12 hdc)**
☐ **Row 27**	Ch 1, turn; hdc2tog, hdc in each st across	**(11 hdc)**
☐ **Row 28**	Ch 1, turn; hdc in each st across to last 2 sts, hdc2tog	**(10 hdc)**
☐ **Row 29**	Ch 1, turn; hdc2tog, hdc in each st across	**(9 hdc)**
☐ **Row 30**	Ch 1, turn; hdc in each st across to last 2 sts, hdc2tog	**(8 hdc)**
☐ **Row 31**	Ch 1, turn; hdc2tog, hdc in each st across	**(7 hdc)**
☐ **Row 32**	Ch 1, turn; hdc in each st across	**(7 hdc)**
☐ **End**	The 7 sts left are the shoulder. Fasten off.	

For your own crochet, gifts and handmade pieces you sell. Do not resell or share this PDF.

Front, second side of the neck

Yarn A, oat.

☐ **Foundation**	Go back to row 25 of the front, with the same side facing you as for row 26 of the first side. Skip the next 20 unworked sts of row 25 for the neck and join yarn A in the next st. This is the left side as worn. The first st of row 26 goes in the joining st. The neck edge is at the beginning of that row.	
☐ **Row 26**	Ch 1; hdc in each st across	**(12 hdc)**
☐ **Row 27**	Ch 1, turn; hdc in each st across to last 2 sts, hdc2tog	**(11 hdc)**
☐ **Row 28**	Ch 1, turn; hdc2tog, hdc in each st across	**(10 hdc)**
☐ **Row 29**	Ch 1, turn; hdc in each st across to last 2 sts, hdc2tog	**(9 hdc)**
☐ **Row 30**	Ch 1, turn; hdc2tog, hdc in each st across	**(8 hdc)**
☐ **Row 31**	Ch 1, turn; hdc in each st across to last 2 sts, hdc2tog	**(7 hdc)**
☐ **Row 32**	Ch 1, turn; hdc in each st across	**(7 hdc)**
☐ **End**	The 7 sts left are the shoulder. Fasten off.	

Cuff rib: make 2

Yarn B, camel.

☐ **Foundation**	With yarn B, ch 6.	
☐ **Row 1 (RS)**	Sc in 2nd ch from hook and in each ch across	**(5 sc)**
☐ **Rows 2 to 24**	Ch 1, turn; sc in back loop only of each st across	**(5 sc)**

A box for each row, 2 to 24: tick them off as you go.

☐ 2 ☐ 3 ☐ 4 ☐ 5 ☐ 6 ☐ 7 ☐ 8 ☐ 9 ☐ 10 ☐ 11 ☐ 12 ☐ 13 ☐ 14 ☐ 15 ☐ 16 ☐ 17 ☐ 18 ☐ 19 ☐ 20 ☐ 21 ☐ 22 ☐ 23 ☐ 24

☐ **End** Fasten off.

Sleeve: make 2

Yarn A, oat.

☐ **Foundation**	Hold a cuff rib with one long edge at the top. Join yarn A at the right-hand end of that edge.	
☐ **Row 1 (RS)**	Ch 1, sc in the end of each rib row across	**(24 sc)**
☐ **Row 2**	Ch 1, turn; hdc in each st across	**(24 hdc)**
☐ **Row 3**	Ch 1, turn; 2 hdc in first st, hdc in each st across to last st, 2 hdc in last st	**(26 hdc)**
☐ **Rows 4 to 5**	Ch 1, turn; hdc in each st across	**(26 hdc)**

A box for each row, 4 to 5: tick them off as you go.

☐ 4 ☐ 5

☐ **Row 6**	Ch 1, turn; 2 hdc in first st, hdc in each st across to last st, 2 hdc in last st	**(28 hdc)**
☐ **Row 7**	Ch 1, turn; hdc in each st across	**(28 hdc)**
☐ **Row 8**	Ch 1, turn; hdc in each st across	**(28 hdc)**
☐ **Row 9**	Ch 1, turn; 2 hdc in first st, hdc in each st across to last st, 2 hdc in last st	**(30 hdc)**

For your own crochet, gifts and handmade pieces you sell. Do not resell or share this PDF.

☐ **Row 10**	Ch 1, turn; hdc in each st across	**(30 hdc)**
☐ **Row 11**	Ch 1, turn; hdc in each st across	**(30 hdc)**
☐ **Row 12**	Ch 1, turn; 2 hdc in first st, hdc in each st across to last st, 2 hdc in last st	**(32 hdc)**
☐ **Row 13**	Ch 1, turn; hdc in each st across	**(32 hdc)**
☐ **Row 14**	Ch 1, turn; hdc in each st across	**(32 hdc)**
☐ **Row 15**	Ch 1, turn; 2 hdc in first st, hdc in each st across to last st, 2 hdc in last st	**(34 hdc)**
☐ **Row 16**	Ch 1, turn; hdc in each st across	**(34 hdc)**
☐ **Row 17**	Ch 1, turn; hdc in each st across	**(34 hdc)**
☐ **Rows 18 to 20**	Ch 1, turn; hdc in each st across	**(34 hdc)**

A box for each row, 18 to 20: tick them off as you go.

☐ 18 ☐ 19 ☐ 20

☐ **End**	The sleeve measures about 8½ in (21.5 cm) across the top and 7 in (18 cm) long. Fasten off.	

Neckband

Yarn B, camel.

Work this at step 2 under Assembly.

☐ **Foundation**	With the right side facing, join yarn B at the right shoulder seam (as worn).	
☐ **Rnd 1**	Ch 1, sc in each of the 30 open sts of the back neck, 8 sc evenly along the 7 row ends down the left side of the neck, sc in each of the 20 sts left at the front, 8 sc evenly along the 7 row ends up the right side; join with sl st in first sc	**(66 sc)**
☐ **Rnds 2 to 3**	Ch 1; sc in each st around; join with sl st in first sc	**(66 sc)**

A box for each round, 2 to 3: tick them off as you go.

☐ 2 ☐ 3

☐ **End**	Fasten off.	

Hood

Yarn A, oat.

☐ **Foundation**	With yarn A, ch 67.	
☐ **Row 1 (RS)**	Hdc in 2nd ch from hook and in each ch across	**(66 hdc)**
☐ **Rows 2 to 23**	Ch 1, turn; hdc in each st across	**(66 hdc)**

A box for each row, 2 to 23: tick them off as you go.

☐ 2 ☐ 3 ☐ 4 ☐ 5 ☐ 6 ☐ 7 ☐ 8 ☐ 9 ☐ 10 ☐ 11 ☐ 12 ☐ 13 ☐ 14 ☐ 15 ☐ 16 ☐ 17 ☐ 18 ☐ 19 ☐ 20 ☐ 21 ☐ 22 ☐ 23

☐ **Row 24**	Ch 1, turn; hdc in next 31 sts, hdc2tog twice, hdc in each st across	**(64 hdc)**
☐ **Row 25**	Ch 1, turn; hdc in next 30 sts, hdc2tog twice, hdc in each st across	**(62 hdc)**
☐ **Row 26**	Ch 1, turn; hdc in next 29 sts, hdc2tog twice, hdc in each st across	**(60 hdc)**
☐ **Row 27**	Ch 1, turn; hdc in next 28 sts, hdc2tog twice, hdc in each st across	**(58 hdc)**

For your own crochet, gifts and handmade pieces you sell. Do not resell or share this PDF.

☐ **Row 28**	Ch 1, turn; hdc in next 27 sts, hdc2tog twice, hdc in each st across	**(56 hdc)**
☐ **End**	The hood piece measures about 16½ in (42 cm) along its lower edge and 8¼ in (21 cm) high. The decreases at the middle of the last 5 rows round off the back of the hood. Fasten off.	

Hood edging

Yarn B, camel.

Work this at step 6 under Assembly.

☐ **Foundation**	With the right side (the outside) of the hood facing, join yarn B at the lower end of the right side of the face (as worn).	
☐ **Row 1**	Ch 1, 33 sc evenly along the 28 row ends up the right side to the top seam, 33 sc evenly along the 28 row ends down the left side	**(66 sc)**
☐ **Row 2**	Ch 1, turn; sc in each st across	**(66 sc)**
☐ **End**	Fasten off.	

Assembly

1. Shoulders: lay the front on the back with right sides together. Sew the 7 sts at each end of the top edge together, and leave the middle 30 sts of the back open for the neck.

2. Neckband: work it now, as written above.

3. Sleeves: place a marker on each side edge of the body 4¼ in (11 cm) below the shoulder seam (about 14 rows), front and back; this is half the top edge of the sleeve. With right sides together, put the middle of the top edge of a sleeve at each shoulder seam and sew the top edge to the body between the markers.

4. Sides and sleeves: sew each side seam from the marker down to the hem, and each sleeve seam from the underarm to the cuff edge.

5. Hood: fold the hood piece in half with right sides together, so that its two row-edge sides lie level (these are the two sides of the face), and sew the first 28 sts of the last row to the last 28 sts for the top of the hood. Turn it right side out. The 66 chs at the foot of the hood's first row are sewn to the 66 sts of the last neckband rnd, stitch for stitch, through the edges as they meet, right sides outward: match the middle of the first row to the middle of the back neck, so that the two sides of the face meet at the middle of the front neck.

6. Hood edging: work it now, as written above.

Finishing

- Weave in all the ends. Wash as the yarn label says and lay flat to the measurements to dry.

In all: 13 pieces; 6,664 stitches; 24 ends to weave in.

Found a mistake in this pattern? Tell us at flossfield.com, under Make a request.

For your own crochet, gifts and handmade pieces you sell. Do not resell or share this PDF.