Baby raglan cardigan

6-12 months · US terms



Finished size
About 21 in (53.5 cm) at the chest and about 10¾ in (27.5 cm) long
To fit a chest of 18 in (45.5 cm)

Skill
Easy
Basic stitches and simple shaping, in one piece from the neck down.

Yarn
Light (3), 2 colors

Hook
4.5 mm (US 7)

Gauge
16 stitches and 8½ rows to 4 in (10 cm)
In double crochet.

You will need

Yarn A: mint, the main color — **about 250 yd (229 m), an estimate**
Yarn B: ivory, the second color — **about 90 yd (82 m), an estimate**
Hook: 4.5 mm (US 7). Also: yarn needle, scissors, tape measure, 4 buttons, 5/8 in (15 mm) across and sewing thread and a sewing needle.

To find how many balls: divide by the length on your yarn's label and round up. The estimate is from the stitches of this size at this gauge.

Sizes

Size	To fit chest	Chest	Length	Yoke depth	Sleeve	Upper sleeve	Neck	Yarn, an estimate
0-3 months	16 in (40.5 cm)	19 in (48.5 cm)	9½ in (24 cm)	4¼ in (11 cm)	6 in (15 cm)	7½ in (19 cm)	14 in (35.5 cm)	about 260 yd (238 m)
3-6 months	17 in (43 cm)	20 in (51 cm)	10¾ in (27.5 cm)	4¾ in (12 cm)	6½ in (16.5 cm)	8 in (20.5 cm)	14 in (35.5 cm)	about 315 yd (288 m)
6-12 months (this file)	**18 in (45.5 cm)**	**21 in (53.5 cm)**	**10¾ in (27.5 cm)**	**4¾ in (12 cm)**	**7½ in (19 cm)**	**8½ in (21.5 cm)**	**15 in (38 cm)**	**about 340 yd (311 m)**
12-18 months	19 in (48.5 cm)	22 in (56 cm)	11¾ in (30 cm)	5¼ in (13.5 cm)	8½ in (21.5 cm)	9 in (23 cm)	15 in (38 cm)	about 395 yd (361 m)
18-24 months	20 in (51 cm)	23 in (58.5 cm)	12¼ in (31 cm)	5¼ in (13.5 cm)	9 in (23 cm)	9½ in (24 cm)	16 in (40.5 cm)	about 425 yd (388 m)

For your own crochet, gifts and handmade pieces you sell. Do not resell or share this PDF.

Schematic

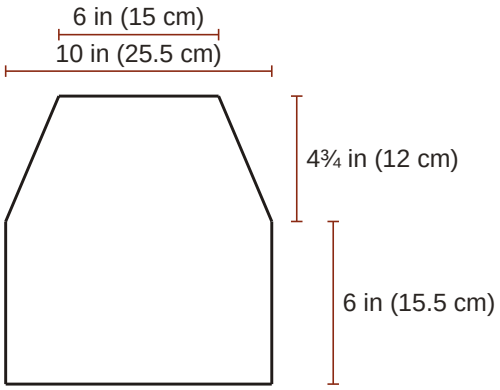

Body, laid flat

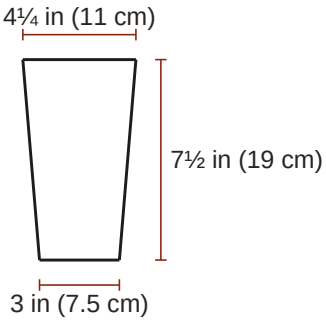

Sleeve, laid flat

Abbreviations

Written in US terms. Where the UK name differs it is given beside the US one.

ch	chain
sl st	slip stitch (UK ss, slip stitch)
sc	single crochet (UK dc, double crochet)
dc	double crochet (UK tr, treble)
sp	space
st	stitch
rnd	round
RS	right side
WS	wrong side

Special stitches

dc2tog (double crochet 2 stitches together (UK treble 2 together)): [Yarn over, insert the hook in the next stitch and pull up a loop, yarn over and pull through 2 loops] twice (3 loops on the hook); yarn over and pull through all 3 loops. It leaves 1 dc2tog for the next row.

fpdc (front post double crochet (UK front post treble)): Yarn over, insert the hook from the front to the back and to the front again around the post of the stitch named, pull up a loop, [yarn over and pull through 2 loops] twice. The front is the side that faces you. A post stitch takes the place of the stitch it is worked around: do not work into the top of that stitch as well. It leaves 1 fpdc for the next row.

bpdc (back post double crochet (UK back post treble)): As fpdc, but insert the hook from the back to the front and to the back again around the post. It leaves 1 bpdc for the next row.

Gauge

16 stitches and 8½ rows to 4 in (10 cm) in double crochet.

> **The swatch.** A test piece to measure and pull out. It is not the start of the pattern. Ch 26; begin in the 3rd ch from the hook and work 13 rows of double crochet on 24 sts, about 6 in (15 cm) wide and 6 in (15 cm) high, and measure 4 in (10 cm) in the middle. Use a larger hook if your swatch is small, a smaller one if it is large.

For your own crochet, gifts and handmade pieces you sell. Do not resell or share this PDF.

Before you start

- Baby sizes.
- The finished chest is 3 in (7.5 cm) wider than the body measurement at each size. Choose by the finished measurement you like; no fit is promised beyond the measurements given.
- Worked from the neck down in one piece. The yoke and body are worked back and forth in rows; row 1 is a right side row. The sleeves are worked in rounds.
- The chain at the start of a round or row (ch 1 for single crochet, ch 2 for double crochet) never counts as a stitch. Work the first stitch into the stitch at its base.
- A ch-1 sp marks each of the four raglan lines. The ch-1 sps are counted apart from the stitches.
- A decrease counts as one stitch.
- At the underarms, work into each of the new chains as into a stitch on the next row. The sleeves are worked into the free side of these chains.
- Stitches worked evenly along row ends: about 15 sc in every 8 rows.
- For the rib, always work around the post (the upright part) of the stitch below, not into its top.
- Color changes in rows: work the last yarn over of the last stitch of the row before with the new yarn. Cut the old yarn, leaving an end of about 6 in (15 cm), or, if it is needed again at the same edge within 6 rows and that edge is straight, carry it loosely up the edge.
- Color changes in rounds: work the sl st that joins the round before with the new yarn. Cut the old yarn, leaving an end of about 6 in (15 cm), or, if it is needed again within 6 rnds, carry it loosely up the inside at the join.

Instructions

Chosen: 6-12 months. Square brackets [ ] hold a repeat: work what is inside as many times as it says. Round brackets ( ) inside a line hold stitches that all go into one place. The count in round brackets at the end of a line is what that line leaves. Tick the box when a row is done. In UK terms sl st is slip stitch, sc is double crochet and dc is treble.

Yoke

Yarn A, mint.

☐ **Foundation**	With yarn A, ch 62.	
☐ **Row 1 (RS)**	Dc in 3rd ch from hook and in each ch across	**(60 dc)**
☐ **Row 2 (WS)**	Ch 2, turn; dc in next 9 sts, ch 1, dc in next 12 sts, ch 1, dc in next 18 sts, ch 1, dc in next 12 sts, ch 1, dc in next 9 sts	**(60 dc, 4 ch-1 sps)**
☐ **Row 3**	Ch 2, turn; **[**dc in each st to next ch-1 sp, (dc, ch 1, dc) in next ch-1 sp**] 4 times**, dc in each st across	**(68 dc, 4 ch-1 sps)**
☐ **Row 4**	Ch 2, turn; **[**dc in each st to next ch-1 sp, (dc, ch 1, dc) in next ch-1 sp**] 4 times**, dc in each st across	**(76 dc, 4 ch-1 sps)**
☐ **Row 5**	Ch 2, turn; **[**dc in each st to next ch-1 sp, (dc, ch 1, dc) in next ch-1 sp**] 4 times**, dc in each st across	**(84 dc, 4 ch-1 sps)**
☐ **Row 6**	Ch 2, turn; **[**dc in each st to next ch-1 sp, (dc, ch 1, dc) in next ch-1 sp**] 4 times**, dc in each st across	**(92 dc, 4 ch-1 sps)**

For your own crochet, gifts and handmade pieces you sell. Do not resell or share this PDF.

☐ **Row 7**	Ch 2, turn; [dc in each st to next ch-1 sp, (2 dc, ch 1, dc) in next ch-1 sp, dc in each st to next ch-1 sp, (dc, ch 1, 2 dc) in next ch-1 sp] twice, dc in each st across	**(104 dc, 4 ch-1 sps)**
☐ **Row 8**	Ch 2, turn; **[**dc in each st to next ch-1 sp, (dc, ch 1, dc) in next ch-1 sp**] 4 times**, dc in each st across	**(112 dc, 4 ch-1 sps)**
☐ **Row 9**	Ch 2, turn; **[**dc in each st to next ch-1 sp, (dc, ch 1, dc) in next ch-1 sp**] 4 times**, dc in each st across	**(120 dc, 4 ch-1 sps)**
☐ **Row 10**	Ch 2, turn; **[**dc in each st to next ch-1 sp, (dc, ch 1, dc) in next ch-1 sp**] 4 times**, dc in each st across	**(128 dc, 4 ch-1 sps)**
☐ **End**	Do not fasten off.	

Body

Yarns in order of use: A, mint; B, ivory.

Colors: rows 11 to 19 yarn A; rows 20 to 23 yarn B.

☐ **Foundation**	Go on from row 10 of the yoke.	
☐ **Row 11**	Ch 2, turn; dc in each st to next ch-1 sp, ch 4 (underarm), skip next ch-1 sp, next 28 sts and next ch-1 sp (one sleeve), dc in each st to next ch-1 sp, ch 4 (underarm), skip next ch-1 sp, next 28 sts and next ch-1 sp (one sleeve), dc in each st across	**(72 dc, 8 ch)**
☐ **Rows 12 to 19**	Ch 2, turn; dc in each st across	**(80 dc)**

A box for each row, 12 to 19: tick them off as you go.

12 13 14 15 16 17 18 19

☐ **Row 20**	**Yarn B.** Ch 2, turn; dc in each st across	**(80 dc)**
☐ **Rows 21 to 23**	Ch 2, turn; **[**fpdc around next st, bpdc around next st**] 40 times**	**(40 fpdcs, 40 bpdcs)**

A box for each row, 21 to 23: tick them off as you go.

21 22 23

☐ **End**	Fasten off.	

Sleeve: make 2

Yarns in order of use: A, mint; B, ivory.

Colors: rnds 1 to 12 yarn A; rnds 13 to 16 yarn B.

☐ **Foundation**	With the right side facing, join yarn A in the left one of the two middle chs of an underarm.	
☐ **Rnd 1**	Ch 2, dc in that ch and in the next underarm ch, dc in the ch-1 sp, dc in each of the 28 sleeve sts, dc in the next ch-1 sp and dc in each of the 2 underarm chs left; join with sl st in first dc	**(34 dc)**
☐ **Rnd 2**	Ch 2; dc in each st around; join with sl st in first dc	**(34 dc)**
☐ **Rnd 3**	Ch 2; dc2tog, dc in each st around to last 2 sts, dc2tog; join with sl st in first dc2tog	**(32 dc)**
☐ **Rnd 4**	Ch 2; dc in each st around; join with sl st in first dc	**(32 dc)**

For your own crochet, gifts and handmade pieces you sell. Do not resell or share this PDF.

☐ **Rnd 5**	Ch 2; dc2tog, dc in each st around to last 2 sts, dc2tog; join with sl st in first dc2tog	**(30 dc)**
☐ **Rnd 6**	Ch 2; dc in each st around; join with sl st in first dc	**(30 dc)**
☐ **Rnd 7**	Ch 2; dc2tog, dc in each st around to last 2 sts, dc2tog; join with sl st in first dc2tog	**(28 dc)**
☐ **Rnd 8**	Ch 2; dc in each st around; join with sl st in first dc	**(28 dc)**
☐ **Rnd 9**	Ch 2; dc2tog, dc in each st around to last 2 sts, dc2tog; join with sl st in first dc2tog	**(26 dc)**
☐ **Rnd 10**	Ch 2; dc in each st around; join with sl st in first dc	**(26 dc)**
☐ **Rnd 11**	Ch 2; dc2tog, dc in each st around to last 2 sts, dc2tog; join with sl st in first dc2tog	**(24 dc)**
☐ **Rnd 12**	Ch 2; dc in each st around; join with sl st in first dc	**(24 dc)**
☐ **Rnd 13**	**Yarn B.** Ch 2; dc in each st around; join with sl st in first dc	**(24 dc)**
☐ **Rnds 14 to 16**	Ch 2; **[**fpdc around next st, bpdc around next st**] 12 times**; join with sl st in first fpdc	**(12 fpdcs, 12 bpdcs)**

A box for each round, 14 to 16: tick them off as you go.

14 15 16

☐ **End** Fasten off.

Neckband

Yarn B, ivory.

☐ **Foundation**	With the right side facing, join yarn B in the end of the foundation chain at the right front.	
☐ **Row 1 (RS)**	Ch 1, sc in each ch across	**(60 sc)**
☐ **Rows 2 to 3**	Ch 1, turn; sc in each st across	**(60 sc)**

A box for each row, 2 to 3: tick them off as you go.

2 3

☐ **End** Fasten off.

Button band

Yarn B, ivory.

☐ **Foundation**	With the right side facing, join yarn B at the neck end of the left front edge (as worn).	
☐ **Row 1 (RS)**	Ch 1, sc in the end of each of the 3 neckband rows and 43 sc evenly down the 23 row ends of the front	**(46 sc)**
☐ **Rows 2 to 5**	Ch 1, turn; sc in each st across	**(46 sc)**

A box for each row, 2 to 5: tick them off as you go.

2 3 4 5

☐ **End** Fasten off.

For your own crochet, gifts and handmade pieces you sell. Do not resell or share this PDF.

Buttonhole band

Yarn B, ivory.

☐ **Foundation**	With the right side facing, join yarn B at the hem of the right front edge (as worn).
☐ **Row 1 (RS)**	Ch 1, 43 sc evenly up the 23 row ends of the front and sc in the end of each of the 3 neckband rows **(46 sc)**
☐ **Row 2**	Ch 1, turn; sc in each st across **(46 sc)**
☐ **Row 3**	Ch 1, turn; sc in next 2 sts, **[**ch 2, skip next 2 sts, sc in next 11 sts**] 3 times**, ch 2, skip next 2 sts, sc in next 3 sts **(38 sc, 4 ch-2 sps)**
☐ **Row 4**	Ch 1, turn; sc in next 3 sts, **[**2 sc in next ch-2 sp, sc in next 11 sts**] 3 times**, 2 sc in next ch-2 sp, sc in next 2 sts **(46 sc)**
☐ **Row 5**	Ch 1, turn; sc in each st across **(46 sc)**
☐ **End**	Fasten off.

Putting it together

Close any small gaps at the underarms with the yarn ends there. Sew the buttons to the button band opposite the buttonholes, with the sewing thread.

Finishing

- Weave in all the ends. Wash as the yarn label says and lay flat to the measurements to dry.

In all: 7 pieces; 18 ends to weave in.

Found a mistake in this pattern? Tell us at flossfield.com, under Make a request.

For your own crochet, gifts and handmade pieces you sell. Do not resell or share this PDF.