Baby round yoke cardigan

6-12 months, to fit chest 18 in (45.5 cm) · US terms



Finished size
About 21 in (53.5 cm) at the chest and about 11 in (28 cm) long
To fit a chest of 18 in (45.5 cm)

Skill
Easy
Basic stitches and simple shaping, in one piece from the neck down

Yarn
Light (3), 3 colors

Hook
4.5 mm (US 7)

Gauge
16 stitches and 13½ rows to 4 in (10 cm)
In half double crochet (UK half treble).

What you need

Yarn A: butter, main color — **about 425 yd (389 m), an estimate**
Yarn B: blush, contrast — **about 15 yd (14 m), an estimate**
Yarn C: sage, color 3 — **about 15 yd (14 m), an estimate**

By weight: about 180 g in all, an estimate, where 100 g is 250 yd (229 m).

Hook: 4.5 mm (US 7), or the size that gives you the gauge. Also: yarn needle, scissors, tape measure, 4 buttons, 5/8 in (15 mm) across and sewing thread and a sewing needle.

To find how many balls: divide by the length on your yarn's label and round up. Buy them from one dye lot. The estimate is from the stitches of this size at this gauge.

Sizes

Size	To fit chest	Yarn, an estimate	Chest (buttoned)	Length from the neckband	Yoke depth	Sleeve from the underarm	Upper sleeve	Neck around (buttoned)
0-3 months	16 in (40.5 cm)	about 330 yd (302 m)	19 in (48.5 cm)	9 in (23 cm)	3¾ in (9.5 cm)	6¼ in (16 cm)	7 in (18 cm)	12½ in (32 cm)
3-6 months	17 in (43 cm)	about 405 yd (370 m)	20 in (51 cm)	10¼ in (26 cm)	4¼ in (11 cm)	6¾ in (17 cm)	7½ in (19 cm)	13 in (33 cm)
6-12 months (this file)	**18 in (45.5 cm)**	**about 455 yd (416 m)**	**21 in (53.5 cm)**	**11 in (28 cm)**	**4½ in (11.5 cm)**	**7¾ in (19.5 cm)**	**8 in (20.5 cm)**	**13 in (33 cm)**
12-18 months	19 in (48.5 cm)	about 510 yd (466 m)	22 in (56 cm)	11½ in (29 cm)	4¾ in (12 cm)	8¼ in (21 cm)	8½ in (21.5 cm)	13½ in (34.5 cm)

For your own crochet, gifts and handmade pieces you sell. Do not resell or share this PDF or copies of it.

18-24 months	20 in (51 cm)	about 535 yd (489 m)	23 in (58.5 cm)	12 in (30.5 cm)	5 in (12.5 cm)	8¾ in (22 cm)	9 in (23 cm)	13½ in (34.5 cm)

Schematic

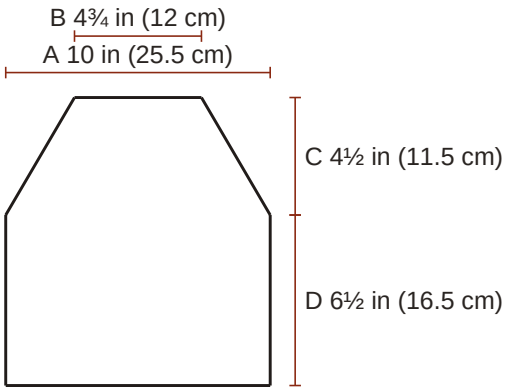

Body, laid flat
A half the chest, without the front bands
B across the neck opening
C the yoke
D below the yoke

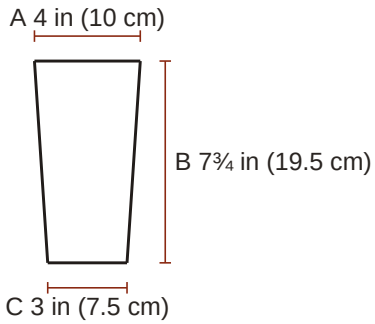

Sleeve, laid flat
A half the top of the sleeve
B the sleeve
C half the cuff

Gauge

16 stitches and 13½ rows to 4 in (10 cm) in half double crochet.

> **The swatch.** A test piece to measure and pull out. It is not the start of the pattern. Ch 25; begin in the 2nd ch from the hook and work 20 rows of half double crochet on 24 sts, about 6 in (15 cm) wide and 6 in (15 cm) high, and measure 4 in (10 cm) in the middle. Use a larger hook if your swatch is small, a smaller one if it is large.

Notes

- On a baby: sew every button on very firmly, and look at each one before every wear.
- The finished chest is 3 in (7.5 cm) wider than the body measurement at each size. Choose by the finished measurement you like; no fit is promised beyond the measurements given.
- Worked from the neck down in one piece. The yoke and body are worked back and forth in rows; row 1 is a right side row. The sleeves are worked in rounds.
- The chain at the start of a round or row (ch 1 for single and half double crochet, ch 2 for double crochet) never counts as a stitch. Work the first stitch into the stitch at its base.
- A decrease counts as one stitch.
- At the underarms, work into each of the new chains as into a stitch on the next row. The sleeves are worked into the free side of these chains.
- Stitches worked evenly along row ends: about 6 sc in every 5 rows.
- For the rib, always work around the post (the upright part) of the stitch below, not into its top.
- Color changes in rows: work the last yarn over of the last stitch of the row before with the new yarn. Cut the old yarn, leaving an end of about 6 in (15 cm), or, if it is needed again at the same edge within 6 rows and that edge is straight, carry it loosely up the edge.

For your own crochet, gifts and handmade pieces you sell. Do not resell or share this PDF or copies of it.

Instructions

6-12 months, to fit chest 18 in (45.5 cm). US terms.

ch chain, **sl st** slip stitch, **sc** single crochet (UK double crochet), **hdc** half double crochet (UK half treble), **Rnd** round, **st** stitch, **sp** space.

RS right side, the one that shows.

2 hdc in next st: both in one stitch. **hdc in next 3 sts**: one in each. **ch-2 sp**: the gap under two chains; the hook goes in the gap.

[ ] 8 times: work what is inside 8 times in all.

(48 hdc): the stitches you have when the row is done. **How to read a pattern**.

Special stitches

hdc2tog (half double crochet 2 stitches together (UK half treble 2 together)): [yarn over, insert the hook in the next stitch and pull up a loop] twice (5 loops on the hook); yarn over and pull through all 5 loops.

fpdc (front post double crochet (UK front post treble)): Yarn over, insert the hook from the front to the back and to the front again around the post of the stitch named, pull up a loop, [yarn over and pull through 2 loops] twice. The front is the side that faces you. A post stitch takes the place of the stitch it is worked around: do not work into the top of that stitch as well.

bpdc (back post double crochet (UK back post treble)): As fpdc, but insert the hook from the back to the front and to the back again around the post.

Yoke

Yarn A, butter.

☐ **Foundation**	With yarn A, ch 49. Colors: row 1 yarn A; then, counted from row 2: 1 row yarn B, 1 row yarn A, 1 row yarn C, 1 row yarn A; repeat these 4 rows to row 9; rows 10 to 15 yarn A.	
☐ **Row 1 (RS)**	Hdc in 2nd ch from hook and in each ch across	(48 hdc)
☐ **Row 2**	Ch 1, turn; [hdc in next 3 sts, 2 hdc in next st] twice, **[**hdc in next 4 sts, 2 hdc in next st**] 8 times**	(58 hdc)
☐ **Row 3**	Ch 1, turn; [hdc in next 4 sts, 2 hdc in next st] twice, **[**hdc in next 5 sts, 2 hdc in next st**] 8 times**	(68 hdc)
☐ **Row 4**	Ch 1, turn; hdc in each st across	(68 hdc)
☐ **Row 5**	Ch 1, turn; [hdc in next 5 sts, 2 hdc in next st] twice, **[**hdc in next 6 sts, 2 hdc in next st**] 8 times**	(78 hdc)
☐ **Row 6**	Ch 1, turn; [hdc in next 6 sts, 2 hdc in next st] twice, **[**hdc in next 7 sts, 2 hdc in next st**] 8 times**	(88 hdc)
☐ **Row 7**	Ch 1, turn; hdc in each st across	(88 hdc)
☐ **Row 8**	Ch 1, turn; [hdc in next 7 sts, 2 hdc in next st] twice, **[**hdc in next 8 sts, 2 hdc in next st**] 8 times**	(98 hdc)
☐ **Row 9**	Ch 1, turn; hdc in each st across	(98 hdc)
☐ **Row 10**	Ch 1, turn; [hdc in next 8 sts, 2 hdc in next st] twice, **[**hdc in next 9 sts, 2 hdc in next st**] 8 times**	(108 hdc)
☐ **Row 11**	Ch 1, turn; [hdc in next 9 sts, 2 hdc in next st] twice, **[**hdc in next 10 sts, 2 hdc in next st**] 8 times**	(118 hdc)

For your own crochet, gifts and handmade pieces you sell. Do not resell or share this PDF or copies of it.

☐ **Row 12**	Ch 1, turn; hdc in each st across	(118 hdc)
☐ **Row 13**	Ch 1, turn; [hdc in next 10 sts, 2 hdc in next st] twice, **[**hdc in next 11 sts, 2 hdc in next st**] 8 times**	(128 hdc)
☐ **Rows 14 to 15** 14 15	Ch 1, turn; hdc in each st across	(128 hdc)
☐ **End**	Do not fasten off.	

Body

Yarn A, butter.

☐ **Foundation**	Go on from row 15 of the yoke.	
☐ **Row 16**	Ch 1, turn; hdc in next 18 sts, ch 4 (underarm), skip next 28 sts (one sleeve), hdc in next 36 sts, ch 4 (underarm), skip next 28 sts (one sleeve), hdc in next 18 sts	(72 hdc, 8 ch)
☐ **Rows 17 to 32** 17 18 19 20 21 22 23 24 25 26 27 28 29 30 31 32	Ch 1, turn; hdc in each st across	(80 hdc)
☐ **Rows 33 to 35** 33 34 35	Ch 2, turn; **[**fpdc around next st, bpdc around next st**] 40 times**	(40 fpdcs, 40 bpdcs)
☐ **End**	Fasten off.	

Sleeve: make 2

Yarn A, butter.

☐ **Foundation**	With the right side facing, join yarn A in the left one of the two middle chs of an underarm; ch 1, hdc in that ch and in the next underarm ch, hdc in each of the 28 sleeve sts and hdc in each of the 2 underarm chs left (32 hdc); join with sl st in first hdc. This is rnd 1.	
☐ **Rnd 2**	Ch 1; hdc in each st around; join with sl st in first hdc	(32 hdc)
☐ **Rnd 3**	Ch 1; hdc2tog, hdc in each st around to last 2 sts, hdc2tog; join with sl st in first hdc2tog	(30 hdc)
☐ **Rnds 4 to 6** 4 5 6	Ch 1; hdc in each st around; join with sl st in first hdc	(30 hdc)
☐ **Rnds 7 to 18** 7 8 9 10 11 12 13 14 15 16 17 18	Repeat Rnds 3 to 6, 3 more times (28, 26, 24 hdc at the ends of the repeats)	(24 hdc)
☐ **Rnds 19 to 21** 19 20 21	Ch 1; hdc in each st around; join with sl st in first hdc	(24 hdc)
☐ **Rnds 22 to 24** 22 23 24	Ch 2; **[**fpdc around next st, bpdc around next st**] 12 times**; join with sl st in first fpdc	(12 fpdcs, 12 bpdcs)
☐ **End**	Fasten off.	

For your own crochet, gifts and handmade pieces you sell. Do not resell or share this PDF or copies of it.

Neckband

Yarn A, butter.

☐ **Foundation**	With the right side facing, join yarn A in the end of the foundation chain at the right front; ch 1, sc in each ch across (48 sc). This is row 1.	
☐ **Rows 2 to 3** 2 3	Ch 1, turn; sc in each st across	(48 sc)
☐ **End**	Fasten off.	

Button band

Yarn A, butter.

☐ **Foundation**	With the right side facing, join yarn A at the neck end of the left front edge (as worn); ch 1, sc in the end of each of the 3 neckband rows, 38 sc evenly down the 32 row ends of the front above the rib and 2 sc in the end of each of the 3 rib rows (47 sc). This is row 1.	
☐ **Rows 2 to 5** 2 3 4 5	Ch 1, turn; sc in each st across	(47 sc)
☐ **End**	Fasten off.	

Buttonhole band

Yarn A, butter.

☐ **Foundation**	With the right side facing, join yarn A at the hem of the right front edge (as worn); ch 1, 2 sc in the end of each of the 3 rib rows, 38 sc evenly up the 32 row ends of the front above the rib and sc in the end of each of the 3 neckband rows (47 sc). This is row 1.	
☐ **Row 2**	Ch 1, turn; sc in each st across	(47 sc)
☐ **Row 3**	Ch 1, turn; sc in next 3 sts, **[**ch 2, skip next 2 sts, sc in next 11 sts**] 3 times**, ch 2, skip next 2 sts, sc in next 3 sts	(39 sc, 4 ch-2 sps)
☐ **Row 4**	Ch 1, turn; sc in next 3 sts, **[**2 sc in next ch-2 sp, sc in next 11 sts**] 3 times**, 2 sc in next ch-2 sp, sc in next 3 sts	(47 sc)
☐ **Row 5**	Ch 1, turn; sc in each st across	(47 sc)
☐ **End**	Fasten off.	

Putting it together

Close any small gaps at the underarms with the yarn ends there. Sew the buttons to the button band opposite the buttonholes, with the sewing thread.

Finishing

- Weave in all the ends. Wash as the yarn label says and lay flat to the measurements to dry.

Found a mistake in this pattern? Tell us at flossfield.com, under Make a request.

For your own crochet, gifts and handmade pieces you sell. Do not resell or share this PDF or copies of it.