Easy one-stitch sweater

M, to fit bust 37 in (94 cm) · US terms



Finished size
About 43 in (109 cm) at the bust and about 23 in (58.5 cm) long
To fit a bust of 37 in (94 cm)

Skill
Beginner
One stitch in rows, a few decreases, straight seams

Yarn
Medium (4), 2 colors

Hook
5.5 mm (US I-9)

Gauge
13 stitches and 15 rows to 4 in (10 cm)
In single crochet (UK double crochet).

What you need

Yarn A: oat, main color **about 975 yd (892 m), an estimate**
Yarn B: rust, contrast **about 250 yd (229 m), an estimate**
By weight: about 610 g in all, an estimate, where 100 g is 200 yd (183 m).

Hook: 5.5 mm (US I-9), or the size that gives you the gauge. Also: yarn needle, scissors, tape measure and stitch markers.

To find how many balls: divide by the length on your yarn's label and round up. Buy them from one dye lot. The estimate is from the stitches of this size at this gauge.

Sizes

Size	To fit bust	Yarn, an estimate	Bust	Length, with the hem rib	Armhole depth	Sleeve, with the cuff rib	Upper sleeve	Cuff around	Back neck	Neck around, at the neck edging
XS	29 in (73.5 cm)	about 1,025 yd (937 m)	34½ in (87.5 cm)	22½ in (57 cm)	7 in (18 cm)	16½ in (42 cm)	14¼ in (36 cm)	7½ in (19 cm)	9¼ in (23.5 cm)	22¼ in (56.5 cm)
S	33 in (84 cm)	about 1,150 yd (1,052 m)	39½ in (100.5 cm)	22¾ in (58 cm)	7½ in (19 cm)	16¼ in (41.5 cm)	14¾ in (37.5 cm)	7½ in (19 cm)	9¼ in (23.5 cm)	22¼ in (56.5 cm)
M (this file)	**37 in (94 cm)**	**about 1,225 yd (1,120 m)**	**43 in (109 cm)**	**23 in (58.5 cm)**	**8 in (20.5 cm)**	**15¾ in (40 cm)**	**16 in (40.5 cm)**	**7½ in (19 cm)**	**9¼ in (23.5 cm)**	**22¼ in (56.5 cm)**
L	41 in (104 cm)	about 1,325 yd (1,212 m)	46¾ in (118.5 cm)	23¼ in (59 cm)	8½ in (21.5 cm)	16 in (40.5 cm)	17¼ in (44 cm)	8 in (20.5 cm)	9¼ in (23.5 cm)	22¼ in (56.5 cm)

For your own crochet, gifts and handmade pieces you sell. Do not resell or share this PDF or copies of it.

1X	45 in (114.5 cm)	about 1,425 yd (1,303 m)	50½ in (128.5 cm)	23½ in (59.5 cm)	9 in (23 cm)	15¾ in (40 cm)	17¾ in (45 cm)	8½ in (21.5 cm)	9¾ in (25 cm)	23½ in (59.5 cm)
2X	49 in (124.5 cm)	about 1,525 yd (1,394 m)	55½ in (141 cm)	23¾ in (60.5 cm)	9½ in (24 cm)	15½ in (39.5 cm)	19 in (48.5 cm)	8½ in (21.5 cm)	9¾ in (25 cm)	23½ in (59.5 cm)
3X	53 in (134.5 cm)	about 1,625 yd (1,486 m)	59 in (150 cm)	24 in (61 cm)	9¾ in (25 cm)	14¾ in (37.5 cm)	19¾ in (50 cm)	8½ in (21.5 cm)	9¾ in (25 cm)	23½ in (59.5 cm)
4X	57 in (145 cm)	about 1,750 yd (1,600 m)	62¾ in (159.5 cm)	24¼ in (61.5 cm)	10½ in (26.5 cm)	14¾ in (37.5 cm)	21 in (53.5 cm)	9¼ in (23.5 cm)	9¾ in (25 cm)	23½ in (59.5 cm)
5X	61 in (155 cm)	about 1,800 yd (1,646 m)	66½ in (169 cm)	24½ in (62 cm)	11 in (28 cm)	13¾ in (35 cm)	22¼ in (56.5 cm)	9¼ in (23.5 cm)	9¾ in (25 cm)	23½ in (59.5 cm)

Schematic

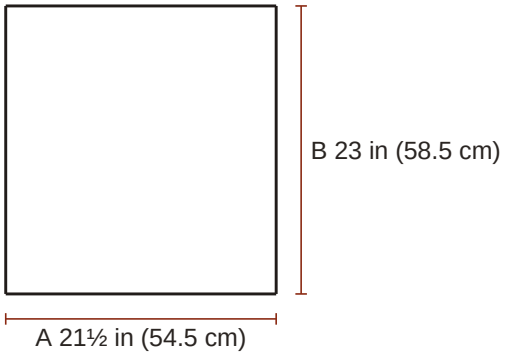

Back
A half the bust
B the length

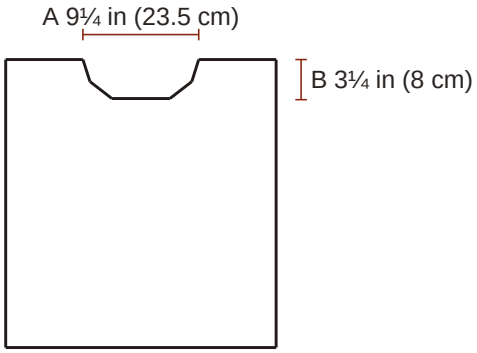

Front
A the neck
B how deep the neck is

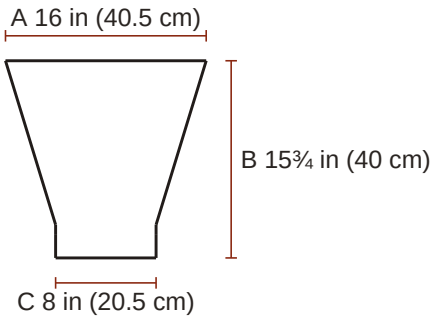

Sleeve (make 2)
A the top of the sleeve, opened flat
B the sleeve
C half the cuff

For your own crochet, gifts and handmade pieces you sell. Do not resell or share this PDF or copies of it.

Gauge

13 stitches and 15 rows to 4 in (10 cm) in single crochet.

> **The swatch.** A test piece to measure and pull out. It is not the start of the pattern. Ch 21; begin in the 2nd ch from the hook and work 22 rows of single crochet on 20 sts, about 6¼ in (16 cm) wide and 5¾ in (14.5 cm) high, and measure 4 in (10 cm) in the middle. Use a larger hook if your swatch is small, a smaller one if it is large. Ribs: worked sideways, 14 rows and 13 sts to 4 in (10 cm), so a rib of 5 sts is about 1½ in (4 cm) deep, a rib of 6 sts is about 1¾ in (4.5 cm) deep and a rib of 7 sts is about 2¼ in (5.5 cm) deep.

Notes

- The finished bust is from 5½ in (14 cm) to 6½ in (16.5 cm) wider than the body measurement, by the size. Choose by the finished measurement you like; no fit is promised beyond the measurements given.
- The turning chain is ch 1 in all the rows and never counts as a stitch. Work the first stitch of every row into the first stitch, at the base of the turning chain. The ch 1 of the neck edging does not count as a stitch either.
- Odd-numbered rows are right side rows. Mark the right side of each piece with a stitch marker or a scrap of yarn.
- The ribs are worked sideways in single crochet in the back loop (UK: double crochet). The back, the front and the sleeves are worked up from a long edge of a rib, and the neck rib is sewn on at the end. A rib draws in: it is a little narrower than the piece above it.
- A decrease (sc2tog) counts as one stitch.
- Whip stitch: put the needle in through both edges from the back to the front, take the yarn over the edge, and do the same again a short step farther on.
- Every seam is sewn in whip stitch, with the yarn needle and yarn A (yarn B where both edges are in yarn B): where a step says sew, whip stitch is meant. Cut a length about three times as long as the seam, unless a step names the end to sew with.
- Color changes in rows: work the last yarn over of the last stitch of the row before with the new yarn. Cut the old yarn, leaving an end of about 6 in (15 cm), or, if it is needed again at the same edge within 6 rows and that edge is straight, carry it loosely up the edge.
- In back loop only: insert the hook under the loop of the stitch that is farther from you, and leave the nearer loop free.

For your own crochet, gifts and handmade pieces you sell. Do not resell or share this PDF or copies of it.

Instructions

M, to fit bust 37 in (94 cm). US terms.

ch chain, **sl st** slip stitch, **sc** single crochet (UK double crochet), **st** stitch.
RS right side, the one that shows.
(7 sc): the stitches you have when the row is done. **How to read a pattern**.

Special stitches

sc2tog (single crochet 2 stitches together (UK double crochet 2 together)): Insert the hook in the next stitch and pull up a loop, insert the hook in the following stitch and pull up a loop (3 loops on the hook); yarn over and pull through all 3 loops.

Hem rib: make 2, one for the back and one for the front

Yarn B, rust.

☐ **Foundation**	With yarn B, ch 8.	
☐ **Row 1 (RS)**	Sc in 2nd ch from hook and in each ch across	(7 sc)
☐ **Rows 2 to 70**	Ch 1, turn; sc in back loop only of each st across	(7 sc)

2 3 4 5 6 7 8 9 10 11 12 13 14 15 16 17 18 19 20 21 22 23 24 25 26 27 28 29
30 31 32 33 34 35 36 37 38 39 40 41 42 43 44 45 46 47 48 49 50 51 52 53 54 55 56 57
58 59 60 61 62 63 64 65 66 67 68 69 70

☐ **End**	Fasten off.	

Back

Yarn B, rust.

☐ **Foundation**	Colors: rows 1 to 8 yarn B; rows 9 and 10 yarn A; rows 11 and 12 yarn B; rows 13 to 78 yarn A. Hold a hem rib with one long edge at the top. Join yarn B at the right-hand end of that edge; ch 1, sc in the end of each rib row across (70 sc). This is row 1, and a right side row.	
☐ **Rows 2 to 78**	Ch 1, turn; sc in each st across	(70 sc)

2 3 4 5 6 7 8 9 10 11 12 13 14 15 16 17 18 19 20 21 22 23 24 25 26 27 28 29
30 31 32 33 34 35 36 37 38 39 40 41 42 43 44 45 46 47 48 49 50 51 52 53 54 55 56 57
58 59 60 61 62 63 64 65 66 67 68 69 70 71 72 73 74 75 76 77 78

☐ **End**	The back measures about 21½ in (54.5 cm) wide and 23 in (58.5 cm) long, with the rib. Row 78 is its top edge. Fasten off.	

Front

Yarn B, rust.

☐ **Foundation**	Colors: rows 1 to 8 yarn B; rows 9 and 10 yarn A; rows 11 and 12 yarn B; rows 13 to 66 yarn A. Hold a hem rib with one long edge at the top. Join yarn B at the right-hand end of that edge; ch 1, sc in the end of each rib row across (70 sc). This is row 1, and a right side row.	
☐ **Rows 2 to 66**	Ch 1, turn; sc in each st across	(70 sc)

2 3 4 5 6 7 8 9 10 11 12 13 14 15 16 17 18 19 20 21 22 23 24 25 26 27 28 29
30 31 32 33 34 35 36 37 38 39 40 41 42 43 44 45 46 47 48 49 50 51 52 53 54 55 56 57

For your own crochet, gifts and handmade pieces you sell. Do not resell or share this PDF or copies of it.

58 59 60 61 62 63 64 65 66

☐ **End**	Do not fasten off.	

Front, first side of the neck

Yarn A, oat.

☐ **Foundation**	Go on from row 66 of the front. This is the left side as worn. The neck edge is at the end of the next row.	
☐ **Row 67**	Ch 1, turn; sc in next 26 sts, leave the last 44 sts unworked	(26 sc)
☐ **Row 68**	Ch 1, turn; sc2tog, sc in each st across	(25 sc)
☐ **Row 69**	Ch 1, turn; sc in each st across to last 2 sts, sc2tog	(24 sc)
☐ **Rows 70 to 73** 70 71 72 73	Repeat Rows 68 and 69, 2 more times (22, 20 sc at the ends of the repeats)	(20 sc)
☐ **Rows 74 to 78** 74 75 76 77 78	Ch 1, turn; sc in each st across	(20 sc)
☐ **End**	The 20 sts left are the shoulder. Fasten off.	

Front, second side of the neck

Yarn A, oat.

☐ **Foundation**	Go back to row 66 of the front, with the same side facing you as for row 67 of the first side. Skip the next 18 unworked sts of row 66 for the neck and join yarn A in the next st. This is the right side as worn. The first st of row 67 goes in the joining st. The neck edge is at the beginning of that row.	
☐ **Row 67**	Ch 1; sc in each st across	(26 sc)
☐ **Row 68**	Ch 1, turn; sc in each st across to last 2 sts, sc2tog	(25 sc)
☐ **Row 69**	Ch 1, turn; sc2tog, sc in each st across	(24 sc)
☐ **Rows 70 to 73** 70 71 72 73	Repeat Rows 68 and 69, 2 more times (22, 20 sc at the ends of the repeats)	(20 sc)
☐ **Rows 74 to 78** 74 75 76 77 78	Ch 1, turn; sc in each st across	(20 sc)
☐ **End**	The 20 sts left are the shoulder. Fasten off.	

Cuff rib: make 2

Yarn B, rust.

☐ **Foundation**	With yarn B, ch 7.	
☐ **Row 1 (RS)**	Sc in 2nd ch from hook and in each ch across	(6 sc)

For your own crochet, gifts and handmade pieces you sell. Do not resell or share this PDF or copies of it.

☐ **Rows 2 to 26**	Ch 1, turn; sc in back loop only of each st across	(6 sc)

2 3 4 5 6 7 8 9 10 11 12 13 14 15 16 17 18 19 20 21 22 23 24 25 26

☐ **End**	Fasten off.	

Sleeve: make 2

Yarn B, rust.

☐ **Foundation**	Colors: rows 1 to 8 yarn B; rows 9 and 10 yarn A; rows 11 and 12 yarn B; rows 13 to 52 yarn A. Hold a cuff rib with one long edge at the top. Join yarn B at the right-hand end of that edge; ch 1, sc in the end of each rib row across (26 sc). This is row 1, and a right side row.	
☐ **Row 2**	Ch 1, turn; sc in each st across	(26 sc)
☐ **Row 3**	Ch 1, turn; 2 sc in first st, sc in each st across to last st, 2 sc in last st	(28 sc)
☐ **Rows 4 to 5**	Ch 1, turn; sc in each st across	(28 sc)

4 5

☐ **Rows 6 to 41**	Repeat Rows 3 to 5, 12 more times (30, 32, 34, 36, 38, 40, 42, 44, 46, 48, 50, 52 sc at the ends of the repeats)	(52 sc)

6 7 8 9 10 11 12 13 14 15 16 17 18 19 20 21 22 23 24 25 26 27 28 29 30 31 32 33 34 35 36 37 38 39 40 41

☐ **Rows 42 to 52**	Ch 1, turn; sc in each st across	(52 sc)

42 43 44 45 46 47 48 49 50 51 52

☐ **End**	The sleeve measures about 16 in (40.5 cm) across the top and 15¾ in (40 cm) long, with the rib. Fasten off.	

Neck rib

Yarn A, oat.

☐ **Foundation**	With yarn A, ch 6.	
☐ **Row 1 (RS)**	Sc in 2nd ch from hook and in each ch across	(5 sc)
☐ **Rows 2 to 72**	Ch 1, turn; sc in back loop only of each st across	(5 sc)

2 3 4 5 6 7 8 9 10 11 12 13 14 15 16 17 18 19 20 21 22 23 24 25 26 27 28 29 30 31 32 33 34 35 36 37 38 39 40 41 42 43 44 45 46 47 48 49 50 51 52 53 54 55 56 57 58 59 60 61 62 63 64 65 66 67 68 69 70 71 72

☐ **End**	The strip is about 1½ in (4 cm) wide and 20½ in (52 cm) long, unstretched. Fasten off, leaving an end of about 62 in (155 cm) for sewing.	

Assembly

1. Neck edging: Work this at step 2 of Assembly. With the right side facing, join yarn A in the first open st of the back neck, at the right shoulder seam (as worn); ch 1, sc in each of the 30 open sts of the back neck, sc in the end of each of the 12 rows down the left side of the neck (12 sc), sc in each of the 18 sts left at the front, and sc in the end of each of the 12 rows up the right side of the neck (12 sc); 72 sc in all; join with sl st in first sc. This is rnd 1. This one round is the whole edging. Fasten off.

For your own crochet, gifts and handmade pieces you sell. Do not resell or share this PDF or copies of it.

2. Shoulders: lay the front on the back with right sides together. Sew the 20 sts of each shoulder of the front to the 20 sts at that end of the top edge of the back. The middle 30 sts of the back stay open for the neck.

3. Neck edging: work it now, as written above.

4. Neck rib: the rib looks the same on both sides. Lay its last row on its foundation chain, so that it makes a ring, and with its own end whip stitch the 5 sts of the last row to the 5 chs under row 1 (the ch that was skipped at the start of row 1 is not counted). The needle comes out at the other long edge of the rib: this edge is sewn to the sweater with the rest of the end. Lay the rib over the outside of the sweater, this long edge level with the top of the neck edging, the rest of the rib hanging down and its seam at the right shoulder seam (as worn), and whip stitch the 72 row ends of that long edge to the 72 sc of the neck edging, one row end to one sc, all the way around. Turn the rib up.

5. Markers: at each side edge of the back and of the front, place a marker in the end of row 49. The 30 rows from the marker to the shoulder seam, about 8 in (20.5 cm), are half of the armhole.

6. Sleeves: with right sides together, put the middle of the top edge of a sleeve at a shoulder seam and its two ends at the markers. Sew the top edge on: 26 sts of the sleeve to the 30 row ends of the front, and the other 26 sts to the 30 row ends of the back, about 5 sts to every 6 row ends.

7. Sides and sleeves: fold the sweater at the shoulders, right sides together. Sew each sleeve seam from the cuff edge to the underarm and go on down the side seam to the lower edge. At the two ribs the edges are the foundation chain and the last row of a rib: sew them stitch to stitch, 6 at the cuff and 7 at the hem. Between the ribs sew row end to row end. Turn the sweater right side out.

Finishing

- Weave in all the ends. Wash as the yarn label says and lay flat to the measurements to dry.

In all: 5 pieces; 17,210 stitches (490 in each hem rib, 5,390 in the back, 4,550 in the front, 255 in the front, first side of the neck, 255 in the front, second side of the neck, 156 in each cuff rib, 2,554 in each sleeve, 360 in the neck rib).

Found a mistake in this pattern? Tell us at flossfield.com, under Make a request.

For your own crochet, gifts and handmade pieces you sell. Do not resell or share this PDF or copies of it.