Bobble baby bib

Small · US terms



Finished size
About 9 in (23 cm) wide and about 8½ in (21.5 cm) at the height below the neck with

Skill
Easy
Basic stitches, simple shaping and an edging all round.

Yarn
Medium (4), 2 colors

Hook
5.5 mm (US I-9)

Gauge
13 stitches and 15 rows to 4 in (10 cm)
In bobble stitch.

You will need

Yarn A: blush, the main color **about 75 yd (69 m), an estimate**

Yarn B: white, the second color **about 35 yd (32 m), an estimate**

Hook: 5.5 mm (US I-9). Also: yarn needle, scissors, tape measure, 1 button, 5/8 in (15 mm) across and sewing thread and a sewing needle.

To find how many balls: divide by the length on your yarn's label and round up. The estimate is from the stitches of this size at this gauge.

Sizes

Size	Width with the edging	Height below the neck with	Neck opening when buttoned	Yarn, an estimate
Small (this file)	**9 in (23 cm)**	**8½ in (21.5 cm)**	**13 in (33 cm)**	**about 110 yd (101 m)**
Large	10¼ in (26 cm)	9½ in (24 cm)	16¼ in (41.5 cm)	about 135 yd (124 m)

For your own crochet, gifts and handmade pieces you sell. Do not resell or share this PDF.

Schematic

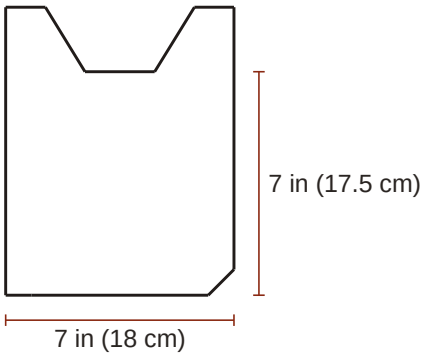

Bib

Abbreviations

Written in US terms. Where the UK name differs it is given beside the US one.

ch	chain
sl st	slip stitch (UK ss, slip stitch)
sc	single crochet (UK dc, double crochet)
dc	double crochet (UK tr, treble)
sp	space
st	stitch
rnd	round
RS	right side

Special stitches

sc2tog (single crochet 2 stitches together (UK double crochet 2 together)): Insert the hook in the next stitch and pull up a loop, insert the hook in the following stitch and pull up a loop (3 loops on the hook); yarn over and pull through all 3 loops. It leaves 1 sc2tog for the next row.

bob (bobble): [Yarn over, insert the hook in the stitch named, yarn over and pull up a loop, yarn over and pull through 2 loops] 5 times in the same stitch (6 loops on the hook); yarn over and pull through all 6 loops. Worked on a wrong side row, it stands out on the right side. It leaves 1 bob for the next row.

Gauge

13 stitches and 15 rows to 4 in (10 cm) in bobble stitch.

> **The swatch.** A test piece to measure and pull out. It is not the start of the pattern. Ch 20. Row 1 (RS): Sc in 2nd ch from hook and in each ch across. Rows 2 and 3: Ch 1, turn; sc in each st across. Row 4: Ch 1, turn; sc in next 3 sts, [bob in next st, sc in next 3 sts] 4 times. Rows 5 to 7: Ch 1, turn; sc in each st across. Row 8: Ch 1, turn; sc in next st, [bob in next st, sc in next 3 sts] 4 times, bob in next st, sc in next st. Rows 9 to 11: Ch 1, turn; sc in each st across. Rows 12 to 19: Repeat Rows 4 to 11, once more. Row 20: Ch 1, turn; sc in next 3 sts, [bob in next st, sc in next 3 sts] 4 times. Rows 21 and 22: Ch 1, turn; sc in each st across. The swatch of 22 rows is about 5¾ in (14.5 cm) wide and 5¾ in (14.5 cm) high. Measure 4 in (10 cm) in the middle. Use a larger hook if your swatch is small, a smaller one if it is large. Straps and edging: 13 sts and 15 rows to 4 in (10 cm) in single crochet (UK: double crochet).

Before you start

- Two sizes. This sheet is for the one size named at PATTERN below: its rows and its yarn amounts. Each other size is written out on a sheet of its own.

For your own crochet, gifts and handmade pieces you sell. Do not resell or share this PDF.

- The bib buttons at the side of the neck, over the short strap. No fit is promised beyond the measurements given. A bib is for mealtimes, with someone watching.
- The turning chain (ch 1 for single crochet) never counts as a stitch. Work the first stitch of every row into the first stitch, at the base of the turning chain.
- The edging is worked in rounds that are not turned; the right side always faces you. The ch 1 at the start of a round does not count as a stitch. Work the first stitch of the round into the stitch at its base, where the round was joined.
- A decrease counts as one stitch.
- Row 1 is a right side row, and so is every odd row. With the right side up and the straps at the top, the short strap is on the right and the long strap on the left.
- Stitches worked evenly along the row ends of the straps: about 6 sc in every 7 rows.

Instructions

Chosen: Small. Square brackets [ ] hold a repeat: work what is inside as many times as it says. The count in round brackets at the end of a line is what that line leaves. Tick the box when a row is done. In UK terms sl st is slip stitch, sc is double crochet and dc is treble.

Bib

Yarn A, blush.

☐ **Foundation**	With yarn A, ch 16.	
☐ **Row 1 (RS)**	Sc in 2nd ch from hook and in each ch across	**(15 sc)**
☐ **Row 2**	Ch 1, turn; 2 sc in first st, sc in each st across to last st, 2 sc in last st	**(17 sc)**
☐ **Row 3**	Ch 1, turn; 2 sc in first st, sc in each st across to last st, 2 sc in last st	**(19 sc)**
☐ **Row 4**	Ch 1, turn; 2 sc in first st, sc in each st across to last st, 2 sc in last st	**(21 sc)**
☐ **Row 5**	Ch 1, turn; 2 sc in first st, sc in each st across to last st, 2 sc in last st	**(23 sc)**
☐ **Rows 6 to 7**	Ch 1, turn; sc in each st across	**(23 sc)**

A box for each row, 6 to 7: tick them off as you go.

☐ 6 ☐ 7

☐ **Row 8**	Ch 1, turn; sc in next st, **[**bob in next st, sc in next 3 sts**] 5 times**, bob in next st, sc in next st	**(17 sc, 6 bob)**
☐ **Rows 9 to 11**	Ch 1, turn; sc in each st across	**(23 sc)**

A box for each row, 9 to 11: tick them off as you go.

☐ 9 ☐ 10 ☐ 11

☐ **Row 12**	Ch 1, turn; sc in next 3 sts, **[**bob in next st, sc in next 3 sts**] 5 times**	**(18 sc, 5 bob)**
☐ **Rows 13 to 15**	Ch 1, turn; sc in each st across	**(23 sc)**

A box for each row, 13 to 15: tick them off as you go.

☐ 13 ☐ 14 ☐ 15

☐ **Row 16**	Ch 1, turn; sc in next st, **[**bob in next st, sc in next 3 sts**] 5 times**, bob in next st, sc in next st	**(17 sc, 6 bob)**
☐ **Row 17**	Ch 1, turn; sc in each st across	**(23 sc)**
☐ **Row 18**	Ch 1, turn; sc in each st across	**(23 sc)**
☐ **Row 19**	Ch 1, turn; sc in each st across	**(23 sc)**
☐ **Row 20**	Ch 1, turn; sc in next 3 sts, **[**bob in next st, sc in next 3 sts**] 5 times**	**(18 sc, 5 bob)**

For your own crochet, gifts and handmade pieces you sell. Do not resell or share this PDF.

☐ **Row 21**	Ch 1, turn; sc in each st across	**(23 sc)**
☐ **Row 22**	Ch 1, turn; sc in each st across	**(23 sc)**
☐ **Row 23**	Ch 1, turn; sc in each st across	**(23 sc)**
☐ **Row 24**	Ch 1, turn; sc in next st, **[**bob in next st, sc in next 3 sts**] 5 times**, bob in next st, sc in next st	**(17 sc, 6 bob)**
☐ **Rows 25 to 26**	Ch 1, turn; sc in each st across	**(23 sc)**

A box for each row, 25 to 26: tick them off as you go.

25 26

☐ **End**	Do not fasten off.	

Neck strap, first side

Yarn A, blush.

☐ **Foundation**	Go on from row 26 of the bib. Both straps are in yarn A from end to end.	
☐ **Row 27**	Ch 1, turn; sc in next 8 sts, leave the last 15 sts unworked	**(8 sc)**
☐ **Row 28**	Ch 1, turn; sc2tog, sc in each st across	**(7 sc)**
☐ **Row 29**	Ch 1, turn; sc in each st across to last 2 sts, sc2tog	**(6 sc)**
☐ **Row 30**	Ch 1, turn; sc2tog, sc in each st across	**(5 sc)**
☐ **Row 31**	Ch 1, turn; sc in each st across to last 2 sts, sc2tog	**(4 sc)**
☐ **Rows 32 to 34**	Ch 1, turn; sc in each st across	**(4 sc)**

A box for each row, 32 to 34: tick them off as you go.

32 33 34

☐ **End**	Fasten off.	

Neck strap, second side

Yarn A, blush.

☐ **Foundation**	Skip the next 7 unworked sts of row 26 for the neck and join yarn A in the next st, with the same side facing as for row 27 of the first side.	
☐ **Row 27**	Ch 1; sc in each st across	**(8 sc)**
☐ **Row 28**	Ch 1, turn; sc in each st across to last 2 sts, sc2tog	**(7 sc)**
☐ **Row 29**	Ch 1, turn; sc2tog, sc in each st across	**(6 sc)**
☐ **Row 30**	Ch 1, turn; sc in each st across to last 2 sts, sc2tog	**(5 sc)**
☐ **Row 31**	Ch 1, turn; sc2tog, sc in each st across	**(4 sc)**
☐ **Rows 32 to 63**	Ch 1, turn; sc in each st across	**(4 sc)**

A box for each row, 32 to 63: tick them off as you go.

32 33 34 35 36 37 38 39 40 41 42 43 44 45 46 47 48 49 50 51 52 53 54 55 56 57 58 59 60 61 62 63

☐ **Row 64**	Ch 1, turn; sc in next st, ch 2, skip next 2 sts, sc in next st	**(2 sc, 1 ch-2 sp)**
☐ **Row 65**	Ch 1, turn; sc in next st, 2 sc in next ch-2 sp, sc in next st	**(4 sc)**

For your own crochet, gifts and handmade pieces you sell. Do not resell or share this PDF.

☐ **Rows 66 to 67**	Ch 1, turn; sc in each st across	**(4 sc)**

A box for each row, 66 to 67: tick them off as you go.

66 67

☐ **End**	Fasten off.

Edging

Yarn B, white.

☐ **Foundation**	With the right side facing, join yarn B in the left-hand end of the foundation chain (left and right are those of the bib as it hangs, right side toward you and straps at the top).
☐ **Rnd 1**	Ch 1, sc in each of the 15 chs along the bottom, 23 sc evenly up the 26 row ends of the right-hand side, 7 sc evenly up the outer edge of the short strap, 6 sc evenly across its end (two in the first st and two in the last), 7 sc evenly down its inner edge, sc in each of the 7 skipped sts of the neck, 36 sc evenly up the inner edge of the long strap, 6 sc evenly across its end (two in the first st and two in the last), 36 sc evenly down its outer edge and 23 sc evenly down the 26 row ends of the left-hand side; join with sl st in first sc **(166 sc)**
☐ **Rnd 2**	Ch 1; 2 sc in next st, sc in next 13 sts, 2 sc in next st, sc in each st around; join with sl st in first sc **(168 sc)**
☐ **End**	Fasten off.

Scalloped edge

Yarn B, white.

☐ **Foundation**	With the right side facing, count 22 sts back from the first sc of rnd 2 of the edging (the last st of the rnd is the first one counted; they lie up the left-hand side, and the last one counted lies just below the strap) and join yarn B in that st. Row 1 begins in that st and goes the same way as rnd 2; this edge goes round the two sides and the bottom only.
☐ **Row 1**	Ch 1; sc in next st, **[**skip next 2 sts, 5 dc in next st, skip next 2 sts, sc in next st**] 10 times**, leave the last 107 sts unworked **(11 sc, 50 dc)**
☐ **End**	Fasten off.

Putting it together

Lay the bib with the right side up. Sew a button, 5/8 in (15 mm) across, to the right side of the short strap, in the middle of its width and about 3/4 in (2 cm) from its end. Sew it on very firmly, with the sewing thread. The end of the long strap goes over it.

Finishing

- Weave in all the ends. Wash as the yarn label says and lay flat to the measurements to dry.

In all: 5 pieces; 8 ends to weave in.

Found a mistake in this pattern? Tell us at flossfield.com, under Make a request.

For your own crochet, gifts and handmade pieces you sell. Do not resell or share this PDF.