Kaftan with wide sleeves and a V neck

S to L, knee length · US terms



Finished size
About 52½ in (133.5 cm) round the body and about 40½ in (103 cm) long

Skill
Easy
Double crochet in two panels, chains added for the sleeves, sewing

Yarn
Fine (2), 3 colors

Hook
4 mm (US G-6)

Gauge
18 stitches and 9½ rows to 4 in (10 cm)
In double crochet (UK treble).

What you need

Yarn A: turquoise, main color	**about 2,350 yd (2,149 m), an estimate**
Yarn B: sand, contrast	**about 115 yd (105 m), an estimate**
Yarn C: coral, the back, the front and the coral triangle	**about 120 yd (110 m), an estimate**

By weight: about 740 g in all, an estimate, where 100 g is 350 yd (320 m).

Hook: 4 mm (US G-6), or the size that gives you the gauge. Also: yarn needle, scissors, tape measure, stitch markers, pins and a safety pin (for the cord).

To find how many balls: divide by the length on your yarn's label and round up. Buy them from one dye lot. The estimate is from the stitches of this size at this gauge.

Sizes

Size	Yarn, an estimate	Around the body	Length	Across	Sleeve from the side of the body	Sleeve depth	Back neck, before the edging	Depth of the V, before the edging	Side slits	Waist cord length
S to L, knee length (this file)	**about 2,585 yd (2,364 m)**	**52½ in (133.5 cm)**	**40½ in (103 cm)**	**50¼ in (127.5 cm)**	**12 in (30.5 cm)**	**11 in (28 cm)**	**9¼ in (23.5 cm)**	**10 in (25.5 cm)**	**8 in (20.5 cm)**	**78 in (198 cm)**
S to L, ankle length	about 3,260 yd (2,981 m)	52½ in (133.5 cm)	54 in (137 cm)	50¼ in (127.5 cm)	12 in (30.5 cm)	11 in (28 cm)	9¼ in (23.5 cm)	10 in (25.5 cm)	15¼ in (38.5 cm)	78 in (198 cm)
1X to 2X, knee length	about 2,985 yd (2,729 m)	61¼ in (155.5 cm)	41¼ in (105 cm)	53 in (134.5 cm)	11 in (28 cm)	11¾ in (30 cm)	9¼ in (23.5 cm)	10 in (25.5 cm)	8 in (20.5 cm)	87 in (221 cm)
1X to 2X, ankle length	about 3,710 yd (3,392 m)	61¼ in (155.5 cm)	54 in (137 cm)	53 in (134.5 cm)	11 in (28 cm)	11¾ in (30 cm)	9¼ in (23.5 cm)	10 in (25.5 cm)	15¼ in (38.5 cm)	87 in (221 cm)

For your own crochet, gifts and handmade pieces you sell. Do not resell or share this PDF or copies of it.

3X to 4X, knee length	about 3,255 yd (2,976 m)	68½ in (174 cm)	41¼ in (105 cm)	54¾ in (139 cm)	10¼ in (26 cm)	12¾ in (32.5 cm)	9¼ in (23.5 cm)	10 in (25.5 cm)	8 in (20.5 cm)	94 in (239 cm)
3X to 4X, ankle length	about 4,055 yd (3,708 m)	68½ in (174 cm)	54 in (137 cm)	54¾ in (139 cm)	10¼ in (26 cm)	12¾ in (32.5 cm)	9¼ in (23.5 cm)	10 in (25.5 cm)	15¼ in (38.5 cm)	94 in (239 cm)

Schematic

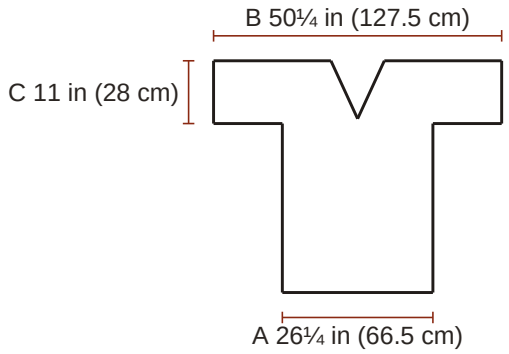

Back (the front has a V neck)
A the width
B the width
C the upper part

Gauge

18 stitches and 9½ rows to 4 in (10 cm) in double crochet.

> **The swatch.** A test piece to measure and pull out. It is not the start of the pattern. Ch 29; begin in the 3rd ch from the hook and work 14 rows of double crochet on 27 sts, about 6 in (15 cm) wide and 6 in (15 cm) high, and measure 4 in (10 cm) in the middle. Use a larger hook if your swatch is small, a smaller one if it is large. Single crochet of the triangles and the edgings: 18 sts and 21 rows to 4 in (10 cm).

Notes

- One wide shape in three widths, each in two lengths. Choose the width by the bust and then the knee or the ankle length. The length is measured from the shoulder to the lower edge.
- Around the body the kaftan is from 10½ in (26.5 cm) to 11¼ in (28.5 cm) wider than the body measurement, by the size. Choose by the finished measurement you like; no fit is promised beyond the measurements given. The body measurement taken is the larger figure of the size.
- The turning chain (ch 1 for single crochet, ch 2 for double crochet) never counts as a stitch. Work the first stitch of every row into the first stitch, at the base of the turning chain.
- The chain at the start of a round never counts as a stitch. Work the first stitch of the round into the stitch at its base, where the round was joined.
- In the panels and the triangles, odd-numbered rows are right side rows. Mark the right side of each piece with a stitch marker or a scrap of yarn.
- A decrease counts as one stitch.
- The rounds of the edgings are joined and not turned; the right side faces you.

For your own crochet, gifts and handmade pieces you sell. Do not resell or share this PDF or copies of it.

- To work into a chain space, insert the hook under the whole chain. In the row after the spaces, each ch-1 sp has 1 dc.
- The second chain of a panel is worked with the other end of the ball, or with a second ball; it must not be tight.
- A cotton panel grows a little longer when it hangs. If you wish to be sure, hang the panels for a day before you sew the sides.
- Sew every seam with the yarn needle and a new length of yarn A, about two and a half times as long as the seam, where no other end is named. Small stitches into both edges keep a seam flat.
- Color changes in rows: work the last yarn over of the last stitch of the row before with the new yarn. Cut the old yarn, leaving an end of about 6 in (15 cm), or, if it is needed again at the same edge within 6 rows and that edge is straight, carry it loosely up the edge.
- Color changes in rounds: work the sl st that joins the round before with the new yarn. Cut the old yarn, leaving an end of about 6 in (15 cm), or, if it is needed again within 6 rnds, carry it loosely up the inside at the join.
- To fit bust 32 to 42 in (81.5 to 106.5 cm).
- Across, sleeve end to sleeve end, without the edging 50¼ in (127.5 cm).
- Sleeve from the side of the body, without the edging 12 in (30.5 cm).

Instructions

S to L, knee length. US terms.

ch chain, **sl st** slip stitch, **sc** single crochet (UK double crochet), **dc** double crochet (UK treble), **Rnd** round, **st** stitch, **sp** space.

RS right side, the one that shows.

ch-1 sp: the gap under the one chain; the hook goes in the gap.

[ ] 58 times: work what is inside 58 times in all.

(118 dc): the stitches you have when the row is done. **How to read a pattern**.

Special stitches

sc2tog (single crochet 2 stitches together (UK double crochet 2 together)): Insert the hook in the next stitch and pull up a loop, insert the hook in the following stitch and pull up a loop (3 loops on the hook); yarn over and pull through all 3 loops.

dc2tog (double crochet 2 stitches together (UK treble 2 together)): [yarn over, insert the hook in the next stitch and pull up a loop, yarn over and pull through 2 loops] twice (3 loops on the hook); yarn over and pull through all 3 loops.

Back

Yarns in order of use: C, coral; A, turquoise.

☐ **Foundation**	With yarn C, ch 120. Colors: rows 1 and 2 yarn C; row 3 yarn B; rows 4 and 5 yarn A; row 6 yarn B; row 7 yarn C; rows 8 to 96 yarn A.	
☐ **Row 1 (RS)**	Dc in 3rd ch from hook and in each ch across	(118 dc)
☐ **Rows 2 to 56**	Ch 2, turn; dc in each st across	(118 dc)

2 3 4 5 6 7 8 9 10 11 12 13 14 15 16 17 18 19 20 21 22 23 24 25 26 27 28 29
30 31 32 33 34 35 36 37 38 39 40 41 42 43 44 45 46 47 48 49 50 51 52 53 54 55 56

☐ **Row 57**	Ch 2, turn; dc in next 2 sts, **[**ch 1, skip next st, dc in next st**] 58 times**	(60 dc, 58 ch-1 sps)
☐ **Row 58**	Ch 2, turn; **[**dc in next st, dc in next ch-1 sp**] 58 times**, dc in next 2 sts	(118 dc)

For your own crochet, gifts and handmade pieces you sell. Do not resell or share this PDF or copies of it.

☐ **Rows 59 to 70**	Ch 2, turn; dc in each st across	(118 dc)

59 60 61 62 63 64 65 66 67 68 69 70

☐ **Row 71**	Join a second ball of yarn A with a sl st in the first st of row 70, at the far end of the row, ch 54 and fasten that yarn off. Go back to the loop at the end of row 70, ch 56, turn; dc in 3rd ch from hook and in each of the next 53 chs, dc in each of the 118 sts of row 70, dc in each of the 54 chs of the second chain	(226 dc)
☐ **Rows 72 to 96**	Ch 2, turn; dc in each st across	(226 dc)

72 73 74 75 76 77 78 79 80 81 82 83 84 85 86 87 88 89 90 91 92 93 94 95 96

☐ **End**	The back is about 26¼ in (66.5 cm) wide at its lower edge, 50¼ in (127.5 cm) across the sleeves and 40½ in (103 cm) long. The foundation chain is its lower edge. Fasten off.	

Front

Yarns in order of use: C, coral; A, turquoise.

☐ **Foundation**	The front is worked as the back to the end of row 72. From row 73 on its rows are worked on one half, the left side of the neck as worn; the neck edge is at the end of right side rows. With yarn C, ch 120. Colors: rows 1 and 2 yarn C; row 3 yarn B; rows 4 and 5 yarn A; row 6 yarn B; row 7 yarn C; rows 8 to 96 yarn A.	
☐ **Row 1 (RS)**	Dc in 3rd ch from hook and in each ch across	(118 dc)
☐ **Rows 2 to 56**	Ch 2, turn; dc in each st across	(118 dc)

2 3 4 5 6 7 8 9 10 11 12 13 14 15 16 17 18 19 20 21 22 23 24 25 26 27 28 29
30 31 32 33 34 35 36 37 38 39 40 41 42 43 44 45 46 47 48 49 50 51 52 53 54 55 56

☐ **Row 57**	Ch 2, turn; dc in next 2 sts, **[**ch 1, skip next st, dc in next st**] 58 times**	(60 dc, 58 ch-1 sps)
☐ **Row 58**	Ch 2, turn; **[**dc in next st, dc in next ch-1 sp**] 58 times**, dc in next 2 sts	(118 dc)
☐ **Rows 59 to 70**	Ch 2, turn; dc in each st across	(118 dc)

59 60 61 62 63 64 65 66 67 68 69 70

☐ **Row 71**	Join a second ball of yarn A with a sl st in the first st of row 70, at the far end of the row, ch 54 and fasten that yarn off. Go back to the loop at the end of row 70, ch 56, turn; dc in 3rd ch from hook and in each of the next 53 chs, dc in each of the 118 sts of row 70, dc in each of the 54 chs of the second chain	(226 dc)
☐ **Row 72**	Ch 2, turn; dc in each st across	(226 dc)
☐ **Row 73**	Ch 2, turn; dc in next 111 sts, dc2tog, leave the last 113 sts unworked	(112 dc)
☐ **Row 74**	Ch 2, turn; dc2tog, dc in each st across	(111 dc)
☐ **Row 75**	Ch 2, turn; dc in each st across to last 2 sts, dc2tog	(110 dc)
☐ **Rows 76 to 93**	Repeat Rows 74 and 75, 9 more times (108, 106, 104, 102, 100, 98, 96, 94, 92 dc at the ends of the repeats)	(92 dc)

76 77 78 79 80 81 82 83 84 85 86 87 88 89 90 91 92 93

For your own crochet, gifts and handmade pieces you sell. Do not resell or share this PDF or copies of it.

☐ **Rows 94 to 96** 94 95 96	Ch 2, turn; dc in each st across	(92 dc)
☐ **End**	The 92 sts of row 96 are the left shoulder and sleeve top. Fasten off.	

Right side of the front neck

Yarn A, turquoise.

☐ **Foundation**	Go back to row 72 of the front, with the same side facing you as for row 73 of the front. Join yarn A in the next unworked st, beside the dc2tog that ends row 73: the right side is worked on the 113 sts that row 73 left.	
☐ **Row 73**	Ch 2; dc2tog, dc in each st across	(112 dc)
☐ **Row 74**	Ch 2, turn; dc in each st across to last 2 sts, dc2tog	(111 dc)
☐ **Row 75**	Ch 2, turn; dc2tog, dc in each st across	(110 dc)
☐ **Rows 76 to 93** 76 77 78 79 80 81 82 83 84 85 86 87 88 89 90 91 92 93	Repeat Rows 74 and 75, 9 more times (108, 106, 104, 102, 100, 98, 96, 94, 92 dc at the ends of the repeats)	(92 dc)
☐ **Rows 94 to 96** 94 95 96	Ch 2, turn; dc in each st across	(92 dc)
☐ **End**	The 92 sts of row 96 are the right shoulder and sleeve top. Fasten off.	

Neck edging

Yarn A, turquoise.

☐ **Foundation**	Work this at step 3 of Assembly. Colors: rnd 1 yarn A; rnd 2 yarn B; rnd 3 yarn C. With the right side facing, join yarn A at the right shoulder seam, as worn, in the first of the open sts of the back neck; ch 1, then work these edges in order: across the back neck, sc in each of the 42 middle sts of row 96 of the back (42 sc); down the left neck edge, along rows 73 to 96 of the front, met from the last of them, 2 sc in the end of each of the next 24 rows (48 sc); up the right neck edge, along rows 73 to 96 of the right side of the front neck, 2 sc in the end of each of the next 24 rows (48 sc). There are 138 sc in all; join with sl st in first sc. This is rnd 1.	
☐ **Rnd 2**	Ch 1; sc in next 88 sts, sc2tog twice, sc in next 46 sts; join with sl st in first sc	(136 sc)
☐ **Rnd 3**	Ch 1; sc in next 87 sts, sc2tog twice, sc in next 45 sts; join with sl st in first sc	(134 sc)
☐ **End**	The edging is about 5/8 in (1.6 cm) deep. Fasten off.	

For your own crochet, gifts and handmade pieces you sell. Do not resell or share this PDF or copies of it.

Sleeve edging: make 2, one on each sleeve

Yarn B, sand.

☐ **Foundation**	Work this at step 5 of Assembly. Colors: rnd 1 yarn B; rnds 2 and 3 yarn C. With the right side facing, join yarn B at the underarm seam of a sleeve, at its outer end; ch 1, 2 sc in the end of each of the 26 rows up to the top seam and 2 sc in the end of each of the 26 rows down to the underarm seam again (104 sc); join with sl st in first sc. This is rnd 1.	
☐ **Rnds 2 to 3** 2 3	Ch 1; sc in each st around; join with sl st in first sc	(104 sc)
☐ **End**	Fasten off.	

Coral triangle: make 9

Yarn C, coral.

☐ **Foundation**	With yarn C, ch 9.	
☐ **Row 1 (RS)**	Sc in 2nd ch from hook and in each ch across	(8 sc)
☐ **Rows 2 to 3** 2 3	Ch 1, turn; sc2tog, sc in each st across to last 2 sts, sc2tog	(4 sc)
☐ **Row 4**	Ch 1, turn; sc2tog twice	(2 sc)
☐ **Row 5**	Ch 1, turn; sc2tog	(1 sc)
☐ **End**	The triangle is about 1¾ in (4.5 cm) wide at its foundation chain and 1 in (2.5 cm) high. Fasten off, leaving an end of about 18 in (45 cm) for sewing. The end hangs at the tip.	

Sand triangle: make 8

Yarn B, sand.

☐ **Foundation**	With yarn B, ch 9.	
☐ **Row 1 (RS)**	Sc in 2nd ch from hook and in each ch across	(8 sc)
☐ **Rows 2 to 3** 2 3	Ch 1, turn; sc2tog, sc in each st across to last 2 sts, sc2tog	(4 sc)
☐ **Row 4**	Ch 1, turn; sc2tog twice	(2 sc)
☐ **Row 5**	Ch 1, turn; sc2tog	(1 sc)
☐ **End**	The triangle is about 1¾ in (4.5 cm) wide at its foundation chain and 1 in (2.5 cm) high. Fasten off, leaving an end of about 18 in (45 cm) for sewing. The end hangs at the tip.	

Waist cord

Yarn B, sand.

☐ **Foundation**	With yarn B, ch 405.	
☐ **Row 1**	Sl st in 2nd ch from hook and in each ch across	(404 sl sts)
☐ **End**	The waist cord is about 78 in (198 cm) long (the slip stitches draw the chain in). Fasten off.	

For your own crochet, gifts and handmade pieces you sell. Do not resell or share this PDF or copies of it.

Assembly

1. Shoulders and sleeve tops: lay the front on the back with right sides together and all edges level. With yarn A sew the 92 sts of row 96 at each end of the back to the 92 sts of row 96 of the front that lie on them, one to one, from the end of the sleeve to the neck. The middle 42 sts of the back stay open for the neck.

2. Sides: with right sides together and yarn A, sew the 54 chs under each sleeve of the front to the 54 chs under that sleeve of the back, from the outer end of the sleeve to the body (on one sleeve of each panel 2 more chs, skipped at the start of row 71, stay free at the outer end), and go on down the side: the ends of rows 70 to 20 of the front to the ends of rows 70 to 20 of the back, row to row. Rows 1 to 19 stay open for the side slits. At the top of each slit take three small stitches one over the other, so that the seam does not open.

3. Neck edging: work it now, as written above.

4. Triangles: number the 138 sc of rnd 1 of the neck edging from the first one: sc 1 to 42 are the back neck, sc 43 to 90 the left neck edge and sc 91 to 138 the right neck edge. Each triangle is laid on the kaftan right side up, its tip pointing away from the neck and the 8 chs of its foundation chain along the foot of 8 of these sc. On the back neck they are laid at sc 2 to 9, 10 to 17, 18 to 25, 26 to 33 and 34 to 41, in the order coral, sand, coral, sand, coral. On the left neck edge they are laid at sc 43 to 50, 51 to 58, 59 to 66, 67 to 74, 75 to 82 and 83 to 90, in the order sand, coral, sand, coral, sand, coral. On the right neck edge they are laid at sc 91 to 98, 99 to 106, 107 to 114, 115 to 122, 123 to 130 and 131 to 138, in the order coral, sand, coral, sand, coral, sand. The two lowest, at the point of the V, are both coral. Pin them flat, and sew each down all around with its own end, with small stitches through the edge of the triangle and the kaftan under it.

5. Sleeve edging: work it now on each sleeve, as written above.

6. Waist cord: row 57 of the front and of the back has 58 ch-1 sps each, 116 in all. Lay the kaftan front up and begin at the middle of the front, where 29 of the sps of the front lie on each side. With the yarn needle or a safety pin lead the cord in through the first sp to the right of the middle, out through the next sp, and so on through all the 116 sps around the body; it comes out through the last one, the first sp to the left of the middle. Draw it until both ends are alike. Tied in front, the cord gathers the waist as much or as little as you like; left out, the kaftan hangs straight.

Finishing

- Weave in all the ends. Wash as the yarn label says and lay flat to the measurements to dry.

In all: 19 pieces; 28,675 stitches (14,078 in the back, 10,919 in the front, 2,265 in the right side of the front neck, 270 in the neck edging, 208 in each sleeve edging, 19 in each coral triangle, 19 in each sand triangle, 404 in the waist cord).

Found a mistake in this pattern? Tell us at flossfield.com, under Make a request.

For your own crochet, gifts and handmade pieces you sell. Do not resell or share this PDF or copies of it.