Boys' color block hoodie

6, to fit chest 25 in (63.5 cm) · US terms



Finished size
About 29½ in (75 cm) at the chest and about 15¼ in (38.5 cm) long
To fit a chest of 25 in (63.5 cm)

Skill
Easy
Basic stitches, simple shaping and seams

Yarn
Medium (4), 3 colors

Hook
5.5 mm (US I-9)

Gauge
13 stitches and 11 rows to 4 in (10 cm)
In half double crochet (UK half treble).

What you need

Yarn A: royal, main color **about 525 yd (480 m), an estimate**
Yarn B: grey, contrast **about 225 yd (206 m), an estimate**
Yarn C: lime, color 3 **about 95 yd (87 m), an estimate**
By weight: about 420 g in all, an estimate, where 100 g is 200 yd (183 m).

Hook: 5.5 mm (US I-9), or the size that gives you the gauge. Also: yarn needle, scissors, tape measure and stitch markers.

To find how many balls: divide by the length on your yarn's label and round up. Buy them from one dye lot. The estimate is from the stitches of this size at this gauge.

Sizes

Size	To fit chest	Yarn, an estimate	Chest	Length	Armhole depth	Sleeve	Upper sleeve	Back neck
2	21 in (53.5 cm)	about 670 yd (613 m)	25¾ in (65.5 cm)	13 in (33 cm)	5 in (12.5 cm)	8¾ in (22 cm)	10½ in (26.5 cm)	8 in (20.5 cm)
4	23 in (58.5 cm)	about 740 yd (677 m)	28¼ in (72 cm)	13¾ in (35 cm)	5 in (12.5 cm)	10¼ in (26 cm)	10½ in (26.5 cm)	8 in (20.5 cm)
6 (this file)	**25 in (63.5 cm)**	**about 845 yd (773 m)**	**29½ in (75 cm)**	**15¼ in (38.5 cm)**	**5¾ in (14.5 cm)**	**11 in (28 cm)**	**11¾ in (30 cm)**	**8½ in (21.5 cm)**
8	26½ in (67.5 cm)	about 950 yd (869 m)	32 in (81.5 cm)	16¾ in (42.5 cm)	5¾ in (14.5 cm)	11½ in (29 cm)	11¾ in (30 cm)	8½ in (21.5 cm)
10	28 in (71 cm)	about 1,055 yd (965 m)	33¼ in (84.5 cm)	18¼ in (46.5 cm)	6½ in (16.5 cm)	13 in (33 cm)	13 in (33 cm)	9¼ in (23.5 cm)

For your own crochet, gifts and handmade pieces you sell. Do not resell or share this PDF or copies of it.

12	30 in (76 cm)	about 1,180 yd (1,079 m)	34½ in (87.5 cm)	19½ in (49.5 cm)	7¼ in (18.5 cm)	14½ in (37 cm)	14¾ in (37.5 cm)	8½ in (21.5 cm)
14	31½ in (80 cm)	about 1,310 yd (1,198 m)	37 in (94 cm)	20¼ in (51.5 cm)	7¼ in (18.5 cm)	15¼ in (38.5 cm)	14¾ in (37.5 cm)	9¼ in (23.5 cm)

Schematic

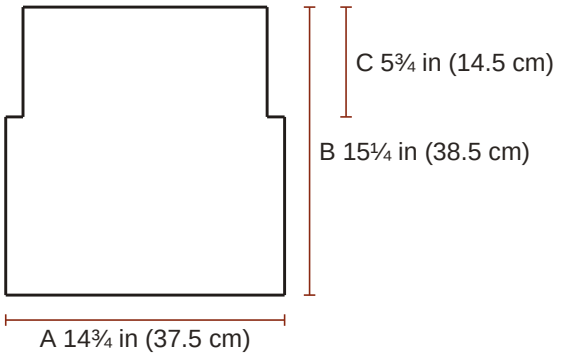

Back
A half the chest
B the length
C the armhole

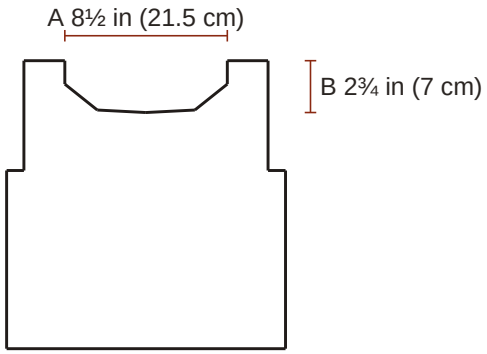

Front
A the neck
B how deep the neck is

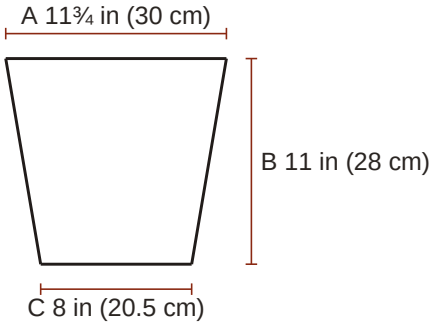

Sleeve (make 2)
A the top of the sleeve, opened flat
B the sleeve
C around the cuff

Gauge

13 stitches and 11 rows to 4 in (10 cm) in half double crochet.

> **The swatch.** A test piece to measure and pull out. It is not the start of the pattern. Ch 21; begin in the 2nd ch from the hook and work 16 rows of half double crochet on 20 sts, about 6¼ in (16 cm) wide and 5¾ in (14.5 cm) high, and measure 4 in (10 cm) in the middle. Use a larger hook if your swatch is small, a smaller one if it is large. Ribs: worked sideways, 14 rows and 13 sts to 4 in (10 cm), so a rib of 5 sts is about 1½ in (4 cm) deep.

For your own crochet, gifts and handmade pieces you sell. Do not resell or share this PDF or copies of it.

Notes

- The finished chest is from 4½ in (11.5 cm) to 5½ in (14 cm) wider than the body measurement, by the size. Choose by the finished measurement you like; no fit is promised beyond the measurements given.
- The turning chain (ch 1 for single and half double crochet) never counts as a stitch. Work the first stitch of every row into the first stitch, at the base of the turning chain.
- The chain at the start of a round never counts as a stitch. Work the first stitch of the round into the stitch at its base, where the round was joined.
- Odd-numbered rows are right side rows. Mark the right side of each piece with a stitch marker or a scrap of yarn.
- A decrease counts as one stitch.
- The ribs are worked sideways in back-loop single crochet (UK: double crochet). The body and sleeves are worked up from a long edge, one stitch in the end of each rib row. The rib draws in: it is a little narrower than the body above it.
- Stitches worked evenly along row ends: about 7 sc in every 6 rows.
- Sew every seam with the yarn needle and yarn A.
- The neck has no opening and must stretch over the head: work the neckband loosely, chain the hood loosely and sew it on loosely.
- Color changes in rows: work the last yarn over of the last stitch of the row before with the new yarn. Cut the old yarn, leaving an end of about 6 in (15 cm), or, if it is needed again at the same edge within 6 rows and that edge is straight, carry it loosely up the edge.
- In back loop only: insert the hook under the loop of the stitch that is farther from you, and leave the nearer loop free.

Instructions

6, to fit chest 25 in (63.5 cm). US terms.

ch chain, **sl st** slip stitch, **sc** single crochet (UK double crochet), **hdc** half double crochet (UK half treble), **Rnd** round, **st** stitch.

RS right side, the one that shows.

(5 sc): the stitches you have when the row is done. **How to read a pattern**.

Special stitches

hdc2tog (half double crochet 2 stitches together (UK half treble 2 together)): [yarn over, insert the hook in the next stitch and pull up a loop] twice (5 loops on the hook); yarn over and pull through all 5 loops.

Hem rib: make 2, one for the back and one for the front

Yarn A, royal.

☐ **Foundation**	With yarn A, ch 6.	
☐ **Row 1 (RS)**	Sc in 2nd ch from hook and in each ch across	(5 sc)
☐ **Rows 2 to 48**	Ch 1, turn; sc in back loop only of each st across	(5 sc)

2 3 4 5 6 7 8 9 10 11 12 13 14 15 16 17 18 19 20 21 22 23 24 25 26 27 28 29
30 31 32 33 34 35 36 37 38 39 40 41 42 43 44 45 46 47 48

☐ **End**	Fasten off.	

For your own crochet, gifts and handmade pieces you sell. Do not resell or share this PDF or copies of it.

Back

Yarns in order of use: A, royal; B, grey.

☐ **Foundation**	Colors: rows 1 to 16 yarn A; rows 17 to 22 yarn C; rows 23 to 38 yarn B. Row 23 begins with a new join: do not change the yarn at the end of row 22. Hold a hem rib with one long edge at the top. Join yarn A at the right-hand end of that edge; ch 1, sc in the end of each rib row across (48 sc). This is row 1, and a right side row.	
☐ **Rows 2 to 22**	Ch 1, turn; hdc in each st across	(48 hdc)
	2 3 4 5 6 7 8 9 10 11 12 13 14 15 16 17 18 19 20 21 22	
☐ **Row 23**	Fasten off and turn. Skip the first 3 sts and join yarn B in the next st; ch 1, and beginning in that st, hdc in next 42 sts, leave the last 3 sts unworked	(42 hdc)
☐ **Rows 24 to 38**	Ch 1, turn; hdc in each st across	(42 hdc)
	24 25 26 27 28 29 30 31 32 33 34 35 36 37 38	
☐ **End**	The back measures about 14¾ in (37.5 cm) wide and 15¼ in (38.5 cm) long, and 13 in (33 cm) across above the armholes. Fasten off.	

Front

Yarns in order of use: A, royal; B, grey.

☐ **Foundation**	Colors: rows 1 to 16 yarn A; rows 17 to 22 yarn C; rows 23 to 30 yarn B. Row 23 begins with a new join: do not change the yarn at the end of row 22. Hold a hem rib with one long edge at the top. Join yarn A at the right-hand end of that edge; ch 1, sc in the end of each rib row across (48 sc). This is row 1, and a right side row.	
☐ **Rows 2 to 22**	Ch 1, turn; hdc in each st across	(48 hdc)
	2 3 4 5 6 7 8 9 10 11 12 13 14 15 16 17 18 19 20 21 22	
☐ **Row 23**	Fasten off and turn. Skip the first 3 sts and join yarn B in the next st; ch 1, and beginning in that st, hdc in next 42 sts, leave the last 3 sts unworked	(42 hdc)
☐ **Rows 24 to 30**	Ch 1, turn; hdc in each st across	(42 hdc)
	24 25 26 27 28 29 30	
☐ **End**	Do not fasten off.	

Front, first side of the neck

Yarn B, grey.

☐ **Foundation**	Go on from row 30 of the front. This is the left side as worn. The neck edge is at the end of the next row. Colors: yarn B throughout.	
☐ **Row 31**	Ch 1, turn; hdc in next 13 sts, leave the last 29 sts unworked	(13 hdc)
☐ **Row 32**	Ch 1, turn; hdc2tog, hdc in each st across	(12 hdc)
☐ **Row 33**	Ch 1, turn; hdc in each st across to last 2 sts, hdc2tog	(11 hdc)
☐ **Rows 34 to 37**	Repeat Rows 32 and 33, 2 more times (9, 7 hdc at the ends of the repeats)	(7 hdc)
	34 35 36 37	

For your own crochet, gifts and handmade pieces you sell. Do not resell or share this PDF or copies of it.

☐ **Row 38**	Ch 1, turn; hdc in each st across	(7 hdc)
☐ **End**	The 7 sts left are the shoulder. Fasten off.	

Front, second side of the neck

Yarn B, grey.

☐ **Foundation**	Go back to row 30 of the front, with the same side facing you as for row 31 of the first side. Skip the next 16 unworked sts of row 30 for the neck and join yarn B in the next st. This is the right side as worn. The first st of row 31 goes in the joining st. The neck edge is at the beginning of that row. Colors: yarn B throughout.	
☐ **Row 31**	Ch 1; hdc in each st across	(13 hdc)
☐ **Row 32**	Ch 1, turn; hdc in each st across to last 2 sts, hdc2tog	(12 hdc)
☐ **Row 33**	Ch 1, turn; hdc2tog, hdc in each st across	(11 hdc)
☐ **Rows 34 to 37**	Repeat Rows 32 and 33, 2 more times (9, 7 hdc at the ends of the repeats)	(7 hdc)
34 35 36 37		
☐ **Row 38**	Ch 1, turn; hdc in each st across	(7 hdc)
☐ **End**	The 7 sts left are the shoulder. Fasten off.	

Cuff rib: make 2

Yarn A, royal.

☐ **Foundation**	With yarn A, ch 6.	
☐ **Row 1 (RS)**	Sc in 2nd ch from hook and in each ch across	(5 sc)
☐ **Rows 2 to 26**	Ch 1, turn; sc in back loop only of each st across	(5 sc)
2 3 4 5 6 7 8 9 10 11 12 13 14 15 16 17 18 19 20 21 22 23 24 25 26		
☐ **End**	Fasten off.	

Sleeve: make 2

Yarn A, royal.

☐ **Foundation**	Colors: rows 1 to 11 yarn A; rows 12 to 15 yarn C; rows 16 to 26 yarn B. Hold a cuff rib with one long edge at the top. Join yarn A at the right-hand end of that edge; ch 1, sc in the end of each rib row across (26 sc). This is row 1, and a right side row.	
☐ **Row 2**	Ch 1, turn; hdc in each st across	(26 hdc)
☐ **Row 3**	Ch 1, turn; 2 hdc in first st, hdc in each st across to last st, 2 hdc in last st	(28 hdc)
☐ **Rows 4 to 5**	Ch 1, turn; hdc in each st across	(28 hdc)
4 5		
☐ **Rows 6 to 20**	Repeat Rows 3 to 5, 5 more times (30, 32, 34, 36, 38 hdc at the ends of the repeats)	(38 hdc)
6 7 8 9 10 11 12 13 14 15 16 17 18 19 20		

For your own crochet, gifts and handmade pieces you sell. Do not resell or share this PDF or copies of it.

☐ **Rows 21 to 26** 21 22 23 24 25 26	Ch 1, turn; hdc in each st across	(38 hdc)
☐ **End**	The sleeve measures about 11¾ in (30 cm) across the top and 11 in (28 cm) long. Fasten off.	

Neckband

Yarn A, royal.

☐ **Foundation**	Work this at step 2 of Assembly. With the right side facing, join yarn A at the right shoulder seam (as worn); ch 1, sc in each of the 28 open sts of the back neck, 9 sc evenly along the 8 row ends down the left side of the neck, sc in each of the 16 sts left at the front, 9 sc evenly along the 8 row ends up the right side; 62 sc in all; join with sl st in first sc. This is rnd 1.	
☐ **Rnds 2 to 3** 2 3	Ch 1; sc in each st around; join with sl st in first sc	(62 sc)
☐ **End**	Fasten off.	

Hood

Yarn A, royal.

☐ **Foundation**	With yarn A, ch 63.	
☐ **Row 1 (RS)**	Hdc in 2nd ch from hook and in each ch across	(62 hdc)
☐ **Rows 2 to 23** 2 3 4 5 6 7 8 9 10 11 12 13 14 15 16 17 18 19 20 21 22 23	Ch 1, turn; hdc in each st across	(62 hdc)
☐ **Row 24**	Ch 1, turn; hdc in next 29 sts, hdc2tog twice, hdc in each st across	(60 hdc)
☐ **Row 25**	Ch 1, turn; hdc in next 28 sts, hdc2tog twice, hdc in each st across	(58 hdc)
☐ **Row 26**	Ch 1, turn; hdc in next 27 sts, hdc2tog twice, hdc in each st across	(56 hdc)
☐ **Row 27**	Ch 1, turn; hdc in next 26 sts, hdc2tog twice, hdc in each st across	(54 hdc)
☐ **Row 28**	Ch 1, turn; hdc in next 25 sts, hdc2tog twice, hdc in each st across	(52 hdc)
☐ **End**	The hood piece measures about 19 in (48.5 cm) along its lower edge and 10¼ in (26 cm) high. The decreases at the middle of the last 5 rows round off the back of the hood. Fasten off.	

Hood edging

Yarn A, royal.

☐ **Foundation**	Work this at step 6 of Assembly. With the right side (the outside) of the hood facing, join yarn A at the lower end of the right side of the face (as worn); ch 1, 33 sc evenly along the 28 row ends up the right side to the top seam, 33 sc evenly along the 28 row ends down the left side (66 sc). This is row 1.	
☐ **Row 2**	Ch 1, turn; sc in each st across	(66 sc)
☐ **End**	Fasten off.	

For your own crochet, gifts and handmade pieces you sell. Do not resell or share this PDF or copies of it.

Assembly

1. Shoulders: lay the front on the back with right sides together. Sew the 7 sts at each end of the top edge together, and leave the middle 28 sts of the back open for the neck.

2. Neckband: work it now, as written above.

3. Sleeves: with right sides together, put the middle of the top edge of a sleeve at each shoulder seam. Sew the top edge to the straight edges of the armhole, front and back, and sew the top 1 in (2.5 cm) of each side edge of the sleeve to the 3 sts left at the underarm.

4. Sides and sleeves: sew each side seam from the underarm down to the hem, and each sleeve seam from the underarm to the cuff edge.

5. Hood: fold the hood piece in half with right sides together, so that its two row-edge sides lie level (these are the two sides of the face), and sew the first 26 sts of the last row to the last 26 sts for the top of the hood. Turn it right side out. The 62 chs at the foot of the hood's first row are sewn to the 62 sts of the last neckband rnd, stitch for stitch, through the edges as they meet, right sides outward: match the middle of the first row to the middle of the back neck, so that the two sides of the face meet at the middle of the front neck.

6. Hood edging: work it now, as written above.

Finishing

- Weave in all the ends. Wash as the yarn label says and lay flat to the measurements to dry.

In all: 5 pieces; 7,618 stitches.

Found a mistake in this pattern? Tell us at flossfield.com, under Make a request.

For your own crochet, gifts and handmade pieces you sell. Do not resell or share this PDF or copies of it.