Children's hooded vest

6, to fit chest 25 in (63.5 cm) · US terms



Finished size
About 29 in (73.5 cm) at the chest and about 15¾ in (40 cm) long
To fit a chest of 25 in (63.5 cm)

Skill
Intermediate
Waffle stitch, shaping, seams and a hood worked from the neck

Yarn
Medium (4), 2 colors

Hook
5.5 mm (US I-9)

Gauge
13 stitches and 8 rows to 4 in (10 cm)
In waffle stitch.

You will need

Yarn A: rust, main — **about 500 yd (457 m), an estimate**
Yarn B: oat, contrast — **about 130 yd (119 m), an estimate**

Hook: 5.5 mm (US I-9), or the size that gives you the gauge. Also: yarn needle, scissors, tape measure, stitch markers, 5 buttons, 7/8 in (22 mm) across and sewing thread and a sewing needle.

To find how many balls: divide by the length on your yarn's label and round up. Buy them from one dye lot. The estimate is from the stitches of this size at this gauge.

Sizes

Size	To fit chest	Chest (buttoned)	Length from the shoulder	Armhole depth, before the edging	Across the back above the armholes	Back neck	Hood height	Yarn, an estimate
2	21 in (53.5 cm)	25¼ in (64 cm)	13¾ in (35 cm)	5½ in (14 cm)	9¾ in (25 cm)	4¼ in (11 cm)	9¼ in (23.5 cm)	about 510 yd (466 m)
4	23 in (58.5 cm)	28 in (71 cm)	14¾ in (37.5 cm)	6½ in (16.5 cm)	10¼ in (26 cm)	5¼ in (13.5 cm)	9¾ in (25 cm)	about 580 yd (530 m)
6 (this file)	**25 in (63.5 cm)**	**29 in (73.5 cm)**	**15¾ in (40 cm)**	**6½ in (16.5 cm)**	**11 in (28 cm)**	**5 in (12.5 cm)**	**10 in (25.5 cm)**	**about 630 yd (576 m)**
8	26½ in (67.5 cm)	31¾ in (80.5 cm)	17¾ in (45 cm)	7½ in (19 cm)	11½ in (29 cm)	5¼ in (13.5 cm)	10½ in (26.5 cm)	about 730 yd (668 m)

For your own crochet, gifts and handmade pieces you sell. Do not resell or share this PDF or copies of it.

10	28 in (71 cm)	32¾ in (83 cm)	18¾ in (47.5 cm)	7½ in (19 cm)	11¾ in (30 cm)	5 in (12.5 cm)	10¾ in (27.5 cm)	about 785 yd (718 m)
12	30 in (76 cm)	35½ in (90 cm)	20¾ in (52.5 cm)	8½ in (21.5 cm)	12½ in (32 cm)	5¼ in (13.5 cm)	11¼ in (28.5 cm)	about 915 yd (837 m)

Schematic

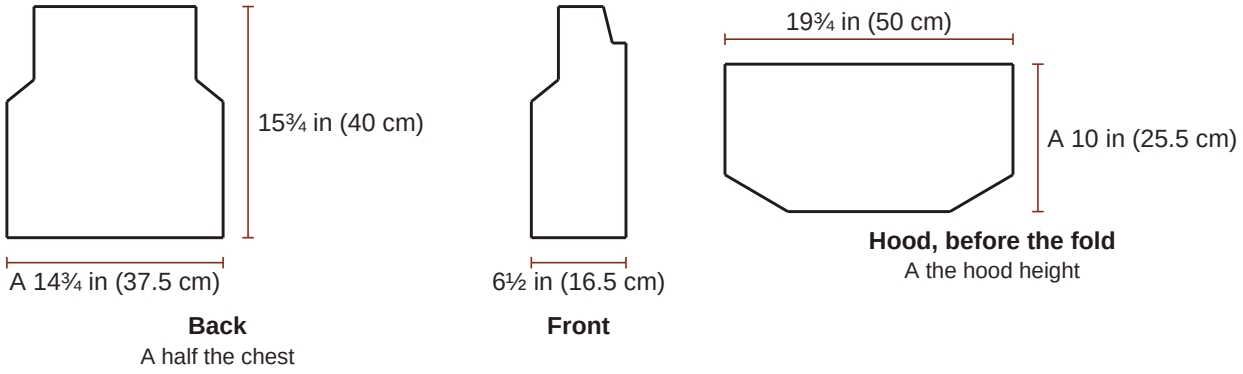

Back
A half the chest

Front

Hood, before the fold
A the hood height

Abbreviations

Written in US terms. Where the UK name differs it is given beside the US one.

sc single crochet (UK dc, double crochet)
dc double crochet (UK tr, treble)
hdc half double crochet (UK htr, half treble)
sl st slip stitch (UK ss, slip stitch)
ch chain stitch
RS right side
WS wrong side
Rnd round
st stitch
sp space
back loop only under the one loop of the stitch that is farther from you

Special stitches

dc2tog (double crochet 2 stitches together (UK treble 2 together)): [yarn over, insert the hook in the next stitch and pull up a loop, yarn over and pull through 2 loops] twice (3 loops on the hook); yarn over and pull through all 3 loops. It leaves 1 dc2tog for the next row or round.

fpdc (front post double crochet (UK front post treble)): Yarn over, insert the hook from the front to the back and to the front again around the post of the stitch named, pull up a loop, [yarn over and pull through 2 loops] twice. The front is the side that faces you. A post stitch takes the place of the stitch it is worked around: do not work into the top of that stitch as well. It leaves 1 fpdc for the next row or round.

For your own crochet, gifts and handmade pieces you sell. Do not resell or share this PDF or copies of it.

Gauge

13 stitches and 8 rows to 4 in (10 cm) in waffle stitch.

> **The swatch.** A test piece to measure and pull out. It is not the start of the pattern. Ch 20. Row 1 (RS): Dc in 3rd ch from hook and in each ch across. Row 2: Ch 2, turn; dc in each st across. Row 3: Ch 2, turn; dc in first st, [fpdc around next st, dc in next 2 sts] 5 times, fpdc around next st, dc in last st. Row 4: Ch 2, turn; dc in first st, dc in next st, [fpdc around next 2 sts, dc in next st] 5 times, dc in last st. Rows 5 to 12: Repeat Rows 3 and 4, 4 more times. The swatch of 12 rows is about 5½ in (14 cm) wide and 6 in (15 cm) high. Measure 4 in (10 cm) in the middle. Use a larger hook if your swatch is small, a smaller one if it is large. Hood: 13 sts and 11 rows to 4 in (10 cm) in half double crochet (UK: half treble). Edgings: 13 sts and 15 rows to 4 in (10 cm) in single crochet (UK: double crochet). Ribs: worked sideways, 14 rows and 13 sts to 4 in (10 cm), so a rib of 5 sts is about 1½ in (4 cm) deep.

Before you start

- The finished chest is from 4 in (10 cm) to 5½ in (14 cm) wider than the body measurement, by the size. Choose by the finished measurement you like; no fit is promised beyond the measurements given.
- The turning chain (ch 1 for single and half double crochet, ch 2 for double crochet) never counts as a stitch. Work the first stitch of every row into the first stitch, at the base of the turning chain.
- The chain at the start of a round never counts as a stitch. Work the first stitch of the round into the stitch at its base, where the round was joined.
- Odd-numbered rows are right side rows. Mark the right side of each piece with a stitch marker or a scrap of yarn.
- Left and right are those of the person who wears the vest.
- Waffle stitch: in a right side row the front post stitches stand in lines, with two double crochet between them; in a wrong side row there is a front post stitch around each of those two, and a double crochet in each post stitch. The first and the last stitch of a row are always double crochet, or a decrease.
- To work into a chain space, insert the hook under the whole chain.
- The ribs are worked sideways in back-loop single crochet. The body is worked up from a long edge of a rib, one stitch in the end of each rib row. The rib draws in: it is a little narrower than the body above it.
- To work into the end of a row, insert the hook under two threads at the side of its edge stitch.
- A decrease counts as one stitch.
- Sew every seam with the yarn needle and yarn A, where no other end is named.
- In back loop only: insert the hook under the loop of the stitch that is farther from you, and leave the nearer loop free.

For your own crochet, gifts and handmade pieces you sell. Do not resell or share this PDF or copies of it.

Instructions

Chosen: 6, to fit chest 25 in (63.5 cm). Square brackets [ ] hold a repeat: work what is inside as many times as it says. The count in round brackets at the end of a line is what that line leaves. Tick the box when a row is done. In UK terms sc is double crochet, dc is treble, hdc is half treble and sl st is slip stitch.

Back hem rib

Yarn B, oat.

☐ **Foundation**	With yarn B, ch 6.	
☐ **Row 1 (RS)**	Sc in 2nd ch from hook and in each ch across	**(5 sc)**
☐ **Rows 2 to 48**	Ch 1, turn; sc in back loop only of each st across	**(5 sc)**

A box for each row, 2 to 48: tick them off as you go.

2 3 4 5 6 7 8 9 10 11 12 13 14 15 16 17 18 19 20 21 22 23 24 25 26 27 28 29 30
31 32 33 34 35 36 37 38 39 40 41 42 43 44 45 46 47 48

☐ **End**	Fasten off.	

Front hem rib: make 2, one for each front

Yarn B, oat.

☐ **Foundation**	With yarn B, ch 6.	
☐ **Row 1 (RS)**	Sc in 2nd ch from hook and in each ch across	**(5 sc)**
☐ **Rows 2 to 21**	Ch 1, turn; sc in back loop only of each st across	**(5 sc)**

A box for each row, 2 to 21: tick them off as you go.

2 3 4 5 6 7 8 9 10 11 12 13 14 15 16 17 18 19 20 21

☐ **End**	Fasten off.	

Back

Yarn A, rust.

☐ **Foundation**	Hold the back hem rib with one long edge at the top. Join yarn A at the right-hand end of that edge; ch 1, sc in the end of each rib row across (48 sc). This is row 1, and a right side row.	
☐ **Row 2**	Ch 2, turn; dc in each st across	**(48 dc)**
☐ **Row 3**	Ch 2, turn; dc in next st, **[**fpdc around next st, dc in next 2 sts**] 15 times**, fpdc around next st, dc in next st	**(32 dc, 16 fpdcs)**
☐ **Row 4**	Ch 2, turn; dc in next 2 sts, **[**fpdc around next 2 sts, dc in next st**] 14 times**, fpdc around next 2 sts, dc in next 2 sts	**(18 dc, 30 fpdcs)**
☐ **Rows 5 to 16**	Repeat Rows 3 and 4, 6 more times	**(18 dc, 30 fpdcs)**

A box for each row, 5 to 16: tick them off as you go.

5 6 7 8 9 10 11 12 13 14 15 16

☐ **Row 17**	Fasten off and turn. Skip the first 3 sts and join yarn A in the next st; ch 2, and beginning in that st, dc in next st, **[**fpdc around next st, dc in next 2 sts**] 13 times**, fpdc around next st, dc in next st, leave the last 3 sts unworked	**(28 dc, 14 fpdcs)**
☐ **Row 18**	Ch 2, turn; dc2tog, **[**fpdc around next 2 sts, dc in next st**] 12 times**, fpdc around next 2 sts, dc2tog	**(14 dc, 26 fpdcs)**

For your own crochet, gifts and handmade pieces you sell. Do not resell or share this PDF or copies of it.

☐ **Row 19**	Ch 2, turn; dc2tog, dc in next st, **[**fpdc around next st, dc in next 2 sts**] 11 times**, fpdc around next st, dc in next st, dc2tog	**(26 dc, 12 fpdcs)**
☐ **Row 20**	Ch 2, turn; dc2tog, **[**dc in next st, fpdc around next 2 sts**] 11 times**, dc in next st, dc2tog	**(14 dc, 22 fpdcs)**
☐ **Row 21**	Ch 2, turn; dc in next st, **[**fpdc around next st, dc in next 2 sts**] 11 times**, fpdc around next st, dc in next st	**(24 dc, 12 fpdcs)**
☐ **Row 22**	Ch 2, turn; dc in next 2 sts, **[**fpdc around next 2 sts, dc in next st**] 10 times**, fpdc around next 2 sts, dc in next 2 sts	**(14 dc, 22 fpdcs)**
☐ **Rows 23 to 28**	Repeat Rows 21 and 22, 3 more times	**(14 dc, 22 fpdcs)**

A box for each row, 23 to 28: tick them off as you go.

☐ 23 ☐ 24 ☐ 25 ☐ 26 ☐ 27 ☐ 28

☐ **Row 29**	Ch 2, turn; dc in next st, **[**fpdc around next st, dc in next 2 sts**] 11 times**, fpdc around next st, dc in next st	**(24 dc, 12 fpdcs)**
☐ **End**	The back measures about 14¾ in (37.5 cm) wide above the rib, 11 in (28 cm) across above the armholes and 15¾ in (40 cm) long with the rib. Fasten off.	

Left front

Yarn A, rust.

☐ **Foundation**	The side edge is at the beginning of every right side row, and the front edge at its end. Hold a front hem rib with one long edge at the top. Join yarn A at the right-hand end of that edge; ch 1, sc in the end of each rib row across (21 sc). This is row 1, and a right side row.	
☐ **Row 2**	Ch 2, turn; dc in each st across	**(21 dc)**
☐ **Row 3**	Ch 2, turn; dc in next st, **[**fpdc around next st, dc in next 2 sts**] 6 times**, fpdc around next st, dc in next st	**(14 dc, 7 fpdcs)**
☐ **Row 4**	Ch 2, turn; dc in next 2 sts, **[**fpdc around next 2 sts, dc in next st**] 5 times**, fpdc around next 2 sts, dc in next 2 sts	**(9 dc, 12 fpdcs)**
☐ **Rows 5 to 16**	Repeat Rows 3 and 4, 6 more times	**(9 dc, 12 fpdcs)**

A box for each row, 5 to 16: tick them off as you go.

☐ 5 ☐ 6 ☐ 7 ☐ 8 ☐ 9 ☐ 10 ☐ 11 ☐ 12 ☐ 13 ☐ 14 ☐ 15 ☐ 16

☐ **Row 17**	Fasten off and turn. Skip the first 3 sts and join yarn A in the next st; ch 2, and beginning in that st, dc in next st, **[**fpdc around next st, dc in next 2 sts**] 5 times**, fpdc around next st, dc in next st	**(12 dc, 6 fpdcs)**
☐ **Row 18**	Ch 2, turn; dc in next 2 sts, **[**fpdc around next 2 sts, dc in next st**] 4 times**, fpdc around next 2 sts, dc2tog	**(7 dc, 10 fpdcs)**
☐ **Row 19**	Ch 2, turn; dc2tog, dc in next st, **[**fpdc around next st, dc in next 2 sts**] 4 times**, fpdc around next st, dc in next st	**(11 dc, 5 fpdcs)**
☐ **Row 20**	Ch 2, turn; dc in next 2 sts, **[**fpdc around next 2 sts, dc in next st**] 4 times**, dc2tog	**(7 dc, 8 fpdcs)**
☐ **Row 21**	Ch 2, turn; dc in next st, **[**fpdc around next st, dc in next 2 sts**] 4 times**, fpdc around next st, dc in next st	**(10 dc, 5 fpdcs)**
☐ **Row 22**	Ch 2, turn; dc in next 2 sts, **[**fpdc around next 2 sts, dc in next st**] 3 times**, fpdc around next 2 sts, dc in next 2 sts	**(7 dc, 8 fpdcs)**

For your own crochet, gifts and handmade pieces you sell. Do not resell or share this PDF or copies of it.

☐ **Rows 23 to 24**	Repeat Rows 21 and 22, once more	**(7 dc, 8 fpdcs)**

A box for each row, 23 to 24: tick them off as you go.

23 24

☐ **Row 25**	Ch 2, turn; dc in next st, **[**fpdc around next st, dc in next 2 sts**] 3 times**, fpdc around next st, dc in next st, leave the last 3 sts unworked	**(8 dc, 4 fpdcs)**
☐ **Row 26**	Ch 2, turn; dc2tog, [fpdc around next 2 sts, dc in next st] twice, fpdc around next 2 sts, dc in next 2 sts	**(5 dc, 6 fpdcs)**
☐ **Row 27**	Ch 2, turn; dc in next st, [fpdc around next st, dc in next 2 sts] twice, fpdc around next st, dc in next st, dc2tog	**(7 dc, 3 fpdcs)**
☐ **Row 28**	Ch 2, turn; dc in next st, fpdc around next st, [dc in next st, fpdc around next 2 sts] twice, dc in next 2 sts	**(5 dc, 5 fpdcs)**
☐ **Row 29**	Ch 2, turn; dc in next st, **[**fpdc around next st, dc in next 2 sts**] 3 times**	**(7 dc, 3 fpdcs)**
☐ **End**	The neck edge is the 3 sts of row 24 that are left free and the edge above them; the 10 sts of the last row are the shoulder. Fasten off.	

Right front

Yarn A, rust.

☐ **Foundation**	The front edge is at the beginning of every right side row, and the side edge at its end. Hold a front hem rib with one long edge at the top. Join yarn A at the right-hand end of that edge; ch 1, sc in the end of each rib row across (21 sc). This is row 1, and a right side row.	
☐ **Row 2**	Ch 2, turn; dc in each st across	**(21 dc)**
☐ **Row 3**	Ch 2, turn; dc in next st, **[**fpdc around next st, dc in next 2 sts**] 6 times**, fpdc around next st, dc in next st	**(14 dc, 7 fpdcs)**
☐ **Row 4**	Ch 2, turn; dc in next 2 sts, **[**fpdc around next 2 sts, dc in next st**] 5 times**, fpdc around next 2 sts, dc in next 2 sts	**(9 dc, 12 fpdcs)**
☐ **Rows 5 to 16**	Repeat Rows 3 and 4, 6 more times	**(9 dc, 12 fpdcs)**

A box for each row, 5 to 16: tick them off as you go.

5 6 7 8 9 10 11 12 13 14 15 16

☐ **Row 17**	Ch 2, turn; dc in next st, **[**fpdc around next st, dc in next 2 sts**] 5 times**, fpdc around next st, dc in next st, leave the last 3 sts unworked	**(12 dc, 6 fpdcs)**
☐ **Row 18**	Ch 2, turn; dc2tog, **[**fpdc around next 2 sts, dc in next st**] 4 times**, fpdc around next 2 sts, dc in next 2 sts	**(7 dc, 10 fpdcs)**
☐ **Row 19**	Ch 2, turn; dc in next st, **[**fpdc around next st, dc in next 2 sts**] 4 times**, fpdc around next st, dc in next st, dc2tog	**(11 dc, 5 fpdcs)**
☐ **Row 20**	Ch 2, turn; dc2tog, **[**dc in next st, fpdc around next 2 sts**] 4 times**, dc in next 2 sts	**(7 dc, 8 fpdcs)**
☐ **Row 21**	Ch 2, turn; dc in next st, **[**fpdc around next st, dc in next 2 sts**] 4 times**, fpdc around next st, dc in next st	**(10 dc, 5 fpdcs)**
☐ **Row 22**	Ch 2, turn; dc in next 2 sts, **[**fpdc around next 2 sts, dc in next st**] 3 times**, fpdc around next 2 sts, dc in next 2 sts	**(7 dc, 8 fpdcs)**

For your own crochet, gifts and handmade pieces you sell. Do not resell or share this PDF or copies of it.

☐ **Rows 23 to 24**	Repeat Rows 21 and 22, once more	**(7 dc, 8 fpdcs)**

A box for each row, 23 to 24: tick them off as you go.

23 24

☐ **Row 25**	Fasten off and turn. Skip the first 3 sts and join yarn A in the next st; ch 2, and beginning in that st, dc in next st, **[**fpdc around next st, dc in next 2 sts**] 3 times**, fpdc around next st, dc in next st	**(8 dc, 4 fpdcs)**
☐ **Row 26**	Ch 2, turn; dc in next 2 sts, [fpdc around next 2 sts, dc in next st] twice, fpdc around next 2 sts, dc2tog	**(5 dc, 6 fpdcs)**
☐ **Row 27**	Ch 2, turn; dc2tog, dc in next st, [fpdc around next st, dc in next 2 sts] twice, fpdc around next st, dc in next st	**(7 dc, 3 fpdcs)**
☐ **Row 28**	Ch 2, turn; dc in next 2 sts, [fpdc around next 2 sts, dc in next st] twice, fpdc around next st, dc in next st	**(5 dc, 5 fpdcs)**
☐ **Row 29**	Ch 2, turn; **[**dc in next 2 sts, fpdc around next st**] 3 times**, dc in next st	**(7 dc, 3 fpdcs)**
☐ **End**	The neck edge is the 3 sts of row 24 that are left free and the edge above them; the 10 sts of the last row are the shoulder. Fasten off.	

Hood

Yarn A, rust.

☐ **Foundation**	Work this at step 2 of the finishing. With the right side facing, join yarn A in the free st of row 24 of the right front that is next to the front edge. Row 1 goes along the 3 free sts and up the 5 rows of the neck edge of the right front, along the 16 free sts of the back neck, down the 5 rows of the neck edge of the left front and along its 3 free sts to the front edge.	
☐ **Row 1 (RS)**	Ch 1; sc in each of next 3 free sts, now up the right front, [2 sc in the end of next row, sc in the end of next row] twice, sc in the end of next row, now along the back neck, sc in each of next 16 free sts, now down the left front, [2 sc in the end of next row, sc in the end of next row] twice, sc in the end of next row, now along the left front, sc in each of next 3 free sts	**(36 sc)**
☐ **Row 2**	Ch 1, turn; hdc in each st across	**(36 hdc)**
☐ **Row 3**	Ch 1, turn; **[**hdc in next st, 2 hdc in next st**] 12 times**, **[**hdc in next 2 sts, 2 hdc in next st**] 4 times**	**(52 hdc)**
☐ **Row 4**	Ch 1, turn; hdc in each st across	**(52 hdc)**
☐ **Row 5**	Ch 1, turn; **[**hdc in next 3 sts, 2 hdc in next st**] 8 times**, **[**hdc in next 4 sts, 2 hdc in next st**] 4 times**	**(64 hdc)**
☐ **Rows 6 to 28**	Ch 1, turn; hdc in each st across	**(64 hdc)**

A box for each row, 6 to 28: tick them off as you go.

6 7 8 9 10 11 12 13 14 15 16 17 18 19 20 21 22 23 24 25 26 27 28

☐ **End**	The hood measures about 19¾ in (50 cm) from one face edge round the back to the other, and 10 in (25.5 cm) high. Fasten off, leaving an end of about 25 in (65 cm) for sewing.	

For your own crochet, gifts and handmade pieces you sell. Do not resell or share this PDF or copies of it.

Armhole edging: make 2

Yarn A, rust.

☐ **Foundation**	Work this at step 4 of the finishing. With the right side facing, join yarn A in the first of the 3 free sts to the left of a side seam. Rnd 1 goes along these sts, up the 13 rows to the shoulder seam, down the 13 rows on the other side of it and along the last 3 free sts, back to the side seam.
☐ **Rnd 1**	Ch 1; sc in each of next 3 free sts, now up to the shoulder, **[**2 sc in the end of each of next 2 rows, sc in the end of next row**] 4 times**, sc in the end of next row, now down from the shoulder, **[**2 sc in the end of each of next 2 rows, sc in the end of next row**] 4 times**, sc in the end of next row, now along the underarm, sc in each of next 3 free sts; join with sl st in first sc **(48 sc)**
☐ **Rnds 2 to 3**	Ch 1; sc in each st around; join with sl st in first sc **(48 sc)**

A box for each round, 2 to 3: tick them off as you go.

2 3

☐ **End**	Fasten off.

Edging

Yarn B, oat.

☐ **Foundation**	Work this at step 5 of the finishing. With the right side facing, join yarn B at the lower corner of the right front. Row 1 goes along the 5 sts of the rib and up the 24 rows of the right front to the hood, up the 28 rows of the hood, through the seam at its top, down the 28 rows of its other edge, down the 24 rows of the left front and along the 5 sts of its rib.
☐ **Row 1 (RS)**	Ch 1; sc in each of next 5 rib sts, now up the right front, **[**2 sc in the end of each of next 2 rows, sc in the end of next row**] 8 times**, now up the hood, **[**sc in the end of each of next 4 rows, 2 sc in the end of next row**] 5 times**, sc in the end of each of next 3 rows, now across the seam, sc in the seam, now down the hood, **[**sc in the end of each of next 4 rows, 2 sc in the end of next row**] 5 times**, sc in the end of each of next 3 rows, now down the left front, **[**2 sc in the end of each of next 2 rows, sc in the end of next row**] 8 times**, now along the rib, sc in each of next 5 rib sts **(157 sc)**
☐ **Row 2 (WS)**	Ch 1, turn; sc in next 2 sts, **[**ch 2, skip next 2 sts, sc in next 7 sts**] 4 times**, ch 2, skip next 2 sts, sc in next 117 sts **(147 sc, 5 ch-2 sps)**
☐ **Row 3**	Ch 1, turn; sc in next 117 sts, 2 sc in next ch-2 sp, **[**sc in next 7 sts, 2 sc in next ch-2 sp**] 4 times**, sc in next 2 sts **(157 sc)**
☐ **Rows 4 to 5**	Ch 1, turn; sc in each st across **(157 sc)**

A box for each row, 4 to 5: tick them off as you go.

4 5

☐ **End**	Fasten off.

For your own crochet, gifts and handmade pieces you sell. Do not resell or share this PDF or copies of it.

Pocket: make 2

Yarn B, oat.

☐ **Foundation**	With yarn B, ch 14.	
☐ **Row 1 (RS)**	Dc in 3rd ch from hook and in each ch across	**(12 dc)**
☐ **Row 2**	Ch 2, turn; dc in each st across	**(12 dc)**
☐ **Row 3**	Ch 2, turn; dc in next st, **[**fpdc around next st, dc in next 2 sts**] 3 times**, fpdc around next st, dc in next st	**(8 dc, 4 fpdcs)**
☐ **Row 4**	Ch 2, turn; dc in next 2 sts, [fpdc around next 2 sts, dc in next st] twice, fpdc around next 2 sts, dc in next 2 sts	**(6 dc, 6 fpdcs)**
☐ **Rows 5 to 8**	Repeat Rows 3 and 4, 2 more times	**(6 dc, 6 fpdcs)**

A box for each row, 5 to 8: tick them off as you go.

5 6 7 8

☐ **Rows 9 to 11**	Ch 1, turn; sc in each st across	**(12 sc)**

A box for each row, 9 to 11: tick them off as you go.

9 10 11

☐ **End**	Fasten off, leaving an end of about 30 in (75 cm) for sewing.

Assembly

1. Shoulders: lay the fronts on the back with right sides together and the side edges level. Sew the 10 shoulder sts of each front to the 10 sts at that end of the last row of the back, st to st, and leave the middle 16 sts of the back free for the neck.

2. Hood: work it now, as written above. Then fold it in half with right sides together, so that its two side edges lie level, and sew the first 32 sts of the last row to the last 32 sts, st to st, for the top of the hood. Turn it right side out.

3. Sides: with right sides together, sew each side seam of the vest from the armhole down to the hem, the 16 row ends of the front to the 16 row ends of the back and the two ends of the ribs to each other.

4. Armhole edging: work it now, as written above.

5. Edging: work it now, as written above.

6. Buttons: lap the left front over the right, so that the whole of one band lies on the other, and mark the place under the middle of each buttonhole on the right band. Sew the 5 buttons there with the sewing thread. The buttons must hold a child's pull: sew each one on, fasten the thread off, and sew through it a second time with a new thread.

7. Pockets: sew one to the right side of each front with its own end, the right side of the pocket outside. Its foundation chain lies along the top of row 3 of the front; 4 sts of the front stay free between the pocket and the side seam, and 5 sts between the pocket and the edging. The end hangs at an upper corner of the pocket, at the top of row 11: from there sew that side down, then the lower edge, then the other side up to its top, and leave row 11, the top of the pocket, open.

Finishing

- Weave in all the ends. Wash as the yarn label says and lay flat to the measurements to dry.

In all: 5 pieces.

Found a mistake in this pattern? Tell us at flossfield.com, under Make a request.

For your own crochet, gifts and handmade pieces you sell. Do not resell or share this PDF or copies of it.