Bumblebee dog costume

S, to fit chest 16 in (40.5 cm) · US terms



Finished size
About 12 in (30.5 cm) at the neck and about 17¾ in (45 cm) at the chest
To fit a dog with neck 11 in (28 cm), chest 16 in (40.5 cm), back 11½ in (29 cm)

Skill
Easy
Basic stitches in rounds, simple shaping

Yarn
Medium (4), 3 colors

Hook
5.5 mm (US I-9)

Gauge
13 stitches and 11 rows to 4 in (10 cm)
In half double crochet (UK half treble).

What you need

Yarn A: gold, color 1 **about 110 yd (101 m), an estimate**
Yarn B: charcoal, color 2 **about 150 yd (137 m), an estimate**
Yarn C: ivory, the wing **about 30 yd (27 m), an estimate**
By weight: about 150 g in all, an estimate, where 100 g is 200 yd (183 m).
Hook: 5.5 mm (US I-9), or the size that gives you the gauge. Also: yarn needle, scissors, tape measure, stitch markers and a little toy stuffing.

To find how many balls: divide by the length on your yarn's label and round up. Buy them from one dye lot. The estimate is from the stitches of this size at this gauge.

Sizes

Size	To fit chest	Yarn, an estimate	Neck (the collar around)	Chest	Length	Leg around	Leg length
XS	13 in (33 cm)	about 190 yd (174 m)	9¾ in (25 cm)	14¾ in (37.5 cm)	9 in (23 cm)	5 in (12.5 cm)	2¼ in (5.5 cm)
S (this file)	**16 in (40.5 cm)**	**about 290 yd (265 m)**	**12 in (30.5 cm)**	**17¾ in (45 cm)**	**11½ in (29 cm)**	**6¼ in (16 cm)**	**3 in (7.5 cm)**
M	21 in (53.5 cm)	about 440 yd (402 m)	14¾ in (37.5 cm)	22¾ in (58 cm)	15 in (38 cm)	7½ in (19 cm)	3¼ in (8.5 cm)
L	26 in (66 cm)	about 640 yd (585 m)	17¾ in (45 cm)	27¾ in (70.5 cm)	18½ in (47 cm)	9¾ in (25 cm)	3¾ in (9.5 cm)

For your own crochet, gifts and handmade pieces you sell. Do not resell or share this PDF or copies of it.

Schematic

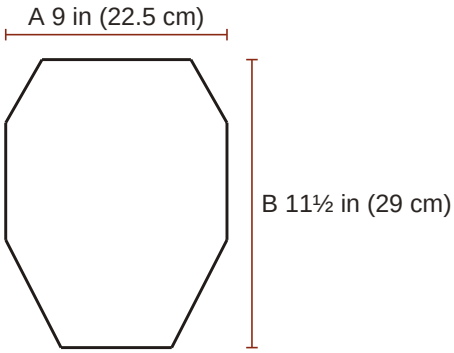

Laid flat, from above
A half the chest
B the length

Gauge

13 stitches and 11 rows to 4 in (10 cm) in half double crochet.

> **The swatch.** A test piece to measure and pull out. It is not the start of the pattern. Ch 21; begin in the 2nd ch from the hook and work 16 rows of half double crochet on 20 sts, about 6¼ in (16 cm) wide and 5¾ in (14.5 cm) high, and measure 4 in (10 cm) in the middle. Use a larger hook if your swatch is small, a smaller one if it is large. Single crochet (UK: double crochet) rounds: about 15 rounds to 4 in (10 cm). Rib of the legs (one round of double crochet, then post stitches): about 7 rounds to 4 in (10 cm). Collar: worked sideways, 14 rows and 13 sts to 4 in (10 cm).

Notes

- Dog sizes. Measure the dog as it stands: the neck where a collar sits, the chest at its widest, just behind the front legs, and the back from the neck to the root of the tail.
- The chest is 1¾ in (4.5 cm) wider than the dog and the collar ¾ to 1 in (2 to 2.5 cm) wider than the neck, by the size; the rib stretches. Choose by the finished measurement; no fit is promised beyond the measurements given. Take it off when nobody is watching the dog.
- The body, the legs and the hem are worked in joined rounds that are not turned: the right side always faces you. The collar and the back are worked in rows that are turned.
- The chain at the start of a round or of a row (ch 1 for single and half double crochet, ch 2 for double crochet) never counts as a stitch. Work the first stitch into the stitch at its base: in a round that is the stitch you joined in, in a row it is the last stitch of the row before.
- The beginning of the rounds of the body is at the middle of the back.
- A decrease counts as one stitch.
- The wings and the stinger are sewn on behind the shoulders and at the tail, where the dog does not reach them easily; sew them on firmly and look at the seams before each wearing.
- Color changes in rows: work the last yarn over of the last stitch of the row before with the new yarn. Cut the old yarn, leaving an end of about 6 in (15 cm), or, if it is needed again at the same edge within 6 rows and that edge is straight, carry it loosely up the edge.
- Color changes in rounds: work the sl st that joins the round before with the new yarn. Cut the old yarn, leaving an end of about 6 in (15 cm), or, if it is needed again within 6 rnds, carry it loosely up the inside at the join.

For your own crochet, gifts and handmade pieces you sell. Do not resell or share this PDF or copies of it.

- In back loop only: insert the hook under the loop of the stitch that is farther from you, and leave the nearer loop free.
- Whip stitch: hold the two edges together, put the needle through both from back to front, bring the yarn over the edges and go in again from the back, one stitch along.
- Length along the back, without the collar 11½ in (29 cm).

Instructions

S, to fit chest 16 in (40.5 cm). US terms.

ch chain, **sl st** slip stitch, **sc** single crochet (UK double crochet), **hdc** half double crochet (UK half treble), **dc** double crochet (UK treble), **Rnd** round, **st** stitch, **sp** space.
RS right side, the one that shows.
2 hdc in next st: both in one stitch. **hdc in next 6 sts**: one in each. **ch-1 sp**: the gap under the one chain; the hook goes in the gap.
[ ] 6 times: work what is inside 6 times in all. **( )**: all of it goes into the one place.
(9 sc): the stitches you have when the row is done. **How to read a pattern**.

Special stitches

hdc2tog (half double crochet 2 stitches together (UK half treble 2 together)): [yarn over, insert the hook in the next stitch and pull up a loop] twice (5 loops on the hook); yarn over and pull through all 5 loops.

fpdc (front post double crochet (UK front post treble)): Yarn over, insert the hook from the front to the back and to the front again around the post of the stitch named, pull up a loop, [yarn over and pull through 2 loops] twice. The front is the side that faces you. A post stitch takes the place of the stitch it is worked around: do not work into the top of that stitch as well.

bpdc (back post double crochet (UK back post treble)): As fpdc, but insert the hook from the back to the front and to the back again around the post.

Collar

Yarn B, charcoal.

☐ **Foundation**	With yarn B, ch 10.	
☐ **Row 1 (RS)**	Sc in 2nd ch from hook and in each ch across	(9 sc)
☐ **Rows 2 to 42**	Ch 1, turn; sc in back loop only of each st across	(9 sc)

2 3 4 5 6 7 8 9 10 11 12 13 14 15 16 17 18 19 20 21 22 23 24 25 26 27 28 29
30 31 32 33 34 35 36 37 38 39 40 41 42

☐ **End**	Fasten off, leaving an end of about 12 in (30 cm). With this end, whipstitch the last row to the foundation chain, stitch to stitch, to make a ring. Both sides of the rib look alike; either may be the outside.	

For your own crochet, gifts and handmade pieces you sell. Do not resell or share this PDF or copies of it.

Body

Yarn A, gold.

☐ **Foundation**	Colors, counted from rnd 1: 3 rnds yarn A, 3 rnds yarn B; repeat these 6 rnds to the end (the last repeat may stop part way). Hold the collar with one open edge at the top. The seam of the collar is the middle of the back. Join yarn A in the end of the rib row just to the left of the seam; ch 1, sc in the same row end and in the end of each rib row around (42 sc); join with sl st in first sc. This is rnd 1.	
☐ **Rnd 2**	Ch 1; **[**hdc in next 6 sts, 2 hdc in next st**] 6 times**; join with sl st in first hdc	(48 hdc)
☐ **Rnd 3**	Ch 1; hdc in each st around; join with sl st in first hdc	(48 hdc)
☐ **Rnd 4**	Ch 1; hdc in next 6 sts, **[**2 hdc in next st, hdc in next 11 sts**] 3 times**, 2 hdc in next st, hdc in next 5 sts; join with sl st in first hdc	(52 hdc)
☐ **Rnd 5**	Ch 1; hdc in each st around; join with sl st in first hdc	(52 hdc)
☐ **Rnd 6**	Ch 1; hdc in next 2 sts, [2 hdc in next st, hdc in next 7 sts] twice, **[**2 hdc in next st, hdc in next 8 sts**] 3 times**, 2 hdc in next st, hdc in next 6 sts; join with sl st in first hdc	(58 hdc)
☐ **Rnd 7**	Ch 1; hdc in each st around; join with sl st in first hdc	(58 hdc)
☐ **Rnd 8**	Ch 1; hdc in next 14 sts, ch 10, skip next 10 sts, hdc in next 10 sts, ch 10, skip next 10 sts, hdc in next 14 sts; join with sl st in first hdc	(38 hdc, 20 ch)
☐ **Rnd 9**	Ch 1; hdc in each st and each ch around; join with sl st in first hdc	(58 hdc)
☐ **Rnds 10 to 21**	Ch 1; hdc in each st around; join with sl st in first hdc	(58 hdc)
10 11 12 13 14 15 16 17 18 19 20 21		
☐ **End**	Fasten off.	

Back

Yarn B, charcoal.

☐ **Foundation**	The back is worked in rows on all the stitches but the middle 16 of the belly. Counting from the first st of rnd 21, sts 1 to 21 are one half of the back, sts 22 to 37 are the belly, and sts 38 to 58 are the other half of the back. With the right side facing, join yarn B in st 38 and work toward the beginning of the round and past it (the joining sl st is not a stitch), on the next 42 sts. The first st of row 1 goes in st 38, its last st in st 21. Colors: rows 1 to 3 yarn B; rows 4 to 6 yarn A; rows 7 to 9 yarn B.	
☐ **Row 1 (RS)**	Ch 1; hdc in each st across	(42 hdc)
☐ **Row 2**	Ch 1, turn; hdc in each st across	(42 hdc)
☐ **Row 3**	Ch 1, turn; hdc2tog, hdc in each st across to last 2 sts, hdc2tog	(40 hdc)
☐ **Rows 4 to 9**	Repeat Rows 2 and 3, 3 more times (38, 36, 34 hdc at the ends of the repeats)	(34 hdc)
4 5 6 7 8 9		
☐ **End**	Fasten off.	

For your own crochet, gifts and handmade pieces you sell. Do not resell or share this PDF or copies of it.

Hem

Yarn B, charcoal.

☐ **Foundation**	With the right side facing, join yarn B in st 22 of rnd 21 of the body, the first of the 16 belly sts; ch 1, sc in each of the 16 belly sts; sc in the end of each of the 9 rows of the back, from row 1 up to row 9, with a second sc in the end of rows 3 and 7 (11 sc); 3 sc in the first of the 34 sts of row 9, sc in each of the next 32 sts, 3 sc in the last st (38 sc); sc in the end of each of the 9 rows of the back, from row 9 down to row 1, with a second sc in the end of rows 7 and 3 (11 sc); join with sl st in first sc (76 sc). This is rnd 1.	
☐ **Rnds 2 to 3** 2 3	Ch 1; sc in each st around; join with sl st in first sc	(76 sc)
☐ **End**	Fasten off.	

Leg: make 2

Yarn A, gold.

☐ **Foundation**	Colors: rnds 1 to 5 yarn A; rnds 6 and 7 yarn B. Work one leg at each leg opening. With the right side facing, join yarn A in the first of the 10 skipped sts of rnd 7 (the first as you met them when you worked rnd 8); ch 1, hdc in each of the 10 skipped sts, then hdc in each of the 10 chs of rnd 8 along their free side (20 hdc); join with sl st in first hdc. This is rnd 1.	
☐ **Rnds 2 to 5** 2 3 4 5	Ch 1; hdc in each st around; join with sl st in first hdc	(20 hdc)
☐ **Rnd 6**	Ch 2; dc in each st around; join with sl st in first dc	(20 dc)
☐ **Rnd 7**	Ch 2; **[**fpdc around next st, bpdc around next st**] 10 times**; join with sl st in first fpdc	(10 fpdcs, 10 bpdcs)
☐ **End**	Fasten off, leaving an end of about 8 in (20 cm). If a small hole is left at either end of the opening, close it with the yarn ends.	

Wing: make 2

Yarn C, ivory.

☐ **Foundation**	With yarn C, ch 4; join with sl st in first ch to form a ring.	
☐ **Rnd 1**	Ch 2; 12 dc in ring; join with sl st in first dc	(12 dc)
☐ **Rnd 2**	Ch 2; **[**dc in next st, ch 1**] 12 times**; join with sl st in first dc	(12 dc, 12 ch-1 sps)
☐ **Rnd 3**	Sl st in next ch-1 sp, ch 2; (dc, ch 1, dc) in same ch-1 sp, ch 1, dc in next ch-1 sp, ch 1, **[**(dc, ch 1, dc) in next ch-1 sp, ch 1, dc in next ch-1 sp, ch 1**] 5 times**; join with sl st in first dc	(18 dc, 18 ch-1 sps)
☐ **Rnd 4**	Sl st in next ch-1 sp, ch 2; (dc, ch 1, dc) in same ch-1 sp, ch 1, [dc in next ch-1 sp, ch 1] twice, **[**(dc, ch 1, dc) in next ch-1 sp, ch 1, [dc in next ch-1 sp, ch 1] twice**] 5 times**; join with sl st in first dc	(24 dc, 24 ch-1 sps)

For your own crochet, gifts and handmade pieces you sell. Do not resell or share this PDF or copies of it.

☐ **Rnd 5**	Ch 1; **[**sc in next st, sc in next ch-1 sp**] 24 times**; join with sl st in first sc	(48 sc)
☐ **End**	The wing is a circle, about 5½ in (14 cm) across. Fasten off, leaving an end of about 20 in (50 cm) for sewing.	

Stinger

Yarn B, charcoal.

☐ **Foundation**	Do not join the rounds. Mark the first st of each round. With yarn B, ch 3; join with sl st in first ch to form a ring.	
☐ **Rnd 1**	Ch 1; 4 sc in ring	(4 sc)
☐ **Rnd 2**	[sc in next st, 2 sc in next st] twice	(6 sc)
☐ **Rnd 3**	[sc in next 2 sts, 2 sc in next st] twice	(8 sc)
☐ **Rnd 4**	[sc in next 3 sts, 2 sc in next st] twice	(10 sc)
☐ **Rnd 5**	[sc in next 4 sts, 2 sc in next st] twice	(12 sc)
☐ **Rnds 6 to 7** 6 7	Sc in each st around	(12 sc)
☐ **End**	Sl st in next st. Fasten off, leaving an end of about 12 in (30 cm) for sewing. Stuff the point firmly and the last 2 rnds only lightly, so that the open edge can be pressed flat.	

Assembly

1. Turn the top half of the collar down over the lower half, to the outside.

2. Roots of the wings: mark 10 sts of the last rnd of a wing, its last 5 sts and its first 5, and count them in that order from 1 to 10; the yarn end hangs in the middle of them. Fold the wing there, between the 5th and the 6th, and whipstitch the marked sts together in pairs with the yarn end (the 5th to the 6th, the 4th to the 7th, the 3rd to the 8th, the 2nd to the 9th, the 1st to the 10th). The 5 pairs are the root, and the wing is now a little cupped. Make the other wing alike.

3. Sew the root of one wing to the body over rnds 9 to 12, between the 4th and the 5th st from the beginning of the round, and the root of the other over the same rnds between the 4th and the 5th st from the end of the round: the middle of the back lies between them. Let the hollow side of each wing face the neck, and sew all around the root twice with the same yarn end, so that the wings stand up and outward.

4. Stinger: press its open edge flat, so that its 12 sts lie in 6 pairs, one st over the other. Mark the 6 sts at the middle of the end of the back on the last rnd of the hem, in line with the beginning of the rounds of the body. With the outside of both toward you, whipstitch each pair to one of these sts, edge to edge, so that the stinger goes on from the hem and its point is away from the neck.

Finishing

- Weave in all the ends on the inside. Wash as the yarn label says and lay flat to the measurements to dry.

In all: 4 pieces.

Found a mistake in this pattern? Tell us at flossfield.com, under Make a request.

For your own crochet, gifts and handmade pieces you sell. Do not resell or share this PDF or copies of it.