Bunny diaper cover with a pom-pom tail

6-12 months, to fit waist 18½ in (47 cm) · US terms



Finished size

About 22 in (56 cm) at the hip and about 7½ in (19 cm) at the front waist to the middle

To fit a waist of 18½ in (47 cm) and a hip of 19 in (48.5 cm)

Skill

Easy

Basic stitches, simple shaping and two short seams

Yarn

Light (3), 2 colors

Hook

4.5 mm (US 7)

Gauge

16 stitches and 13½ rows to 4 in (10 cm)

In half double crochet (UK half treble).

What you need

Yarn A: fawn, main color **about 170 yd (155 m), an estimate**

Yarn B: white, contrast **about 70 yd (64 m), an estimate**

By weight: about 95 g in all, an estimate, where 100 g is 250 yd (229 m).

Hook: 4.5 mm (US 7), or the size that gives you the gauge. Also: yarn needle, scissors, tape measure and a piece of card for the pompom.

To find how many balls: divide by the length on your yarn's label and round up. Buy them from one dye lot. The estimate is from the stitches of this size at this gauge.

Sizes

Size	Waist	Hip	Front waist to the middle of the crotch	Back waist to the middle of the crotch	Around each leg opening	Yarn, an estimate
Newborn	13½ in (34.5 cm)	17 in (43 cm)	5½ in (14 cm)	6 in (15 cm)	7 in (18 cm)	about 135 yd (123 m)
0-3 months	16½ in (42 cm)	20 in (51 cm)	6½ in (16.5 cm)	7½ in (19 cm)	8 in (20.5 cm)	about 185 yd (169 m)
3-6 months	17½ in (44.5 cm)	21 in (53.5 cm)	6¾ in (17 cm)	8 in (20.5 cm)	8½ in (21.5 cm)	about 200 yd (183 m)
6-12 months (this file)	**18½ in (47 cm)**	**22 in (56 cm)**	**7½ in (19 cm)**	**8¾ in (22 cm)**	**9 in (23 cm)**	**about 240 yd (219 m)**
12-18 months	19½ in (49.5 cm)	23 in (58.5 cm)	8 in (20.5 cm)	9 in (23 cm)	10 in (25.5 cm)	about 260 yd (238 m)
18-24 months	20 in (51 cm)	24 in (61 cm)	8¼ in (21 cm)	9½ in (24 cm)	10 in (25.5 cm)	about 275 yd (251 m)

For your own crochet, gifts and handmade pieces you sell. Do not resell or share this PDF or copies of it.

Schematic

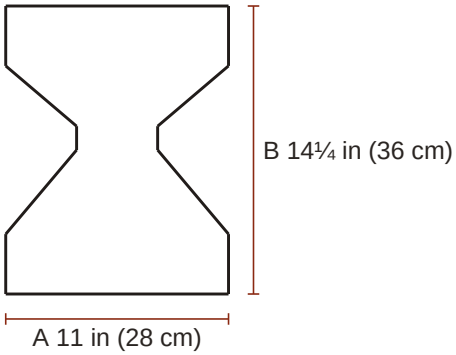

Cover
A half the hip
B from top to bottom

Gauge

16 stitches and 13½ rows to 4 in (10 cm) in half double crochet.

> **The swatch.** A test piece to measure and pull out. It is not the start of the pattern. Ch 25; begin in the 2nd ch from the hook and work 20 rows of half double crochet on 24 sts, about 6 in (15 cm) wide and 6 in (15 cm) high, and measure 4 in (10 cm) in the middle. Use a larger hook if your swatch is small, a smaller one if it is large. Edgings: 16 sts to 4 in (10 cm) in double crochet (UK: treble); one round of single crochet, one of double crochet and one of post stitches are about 1 1/8 in (2.9 cm) high together.

Notes

- Baby sizes, newborn and up.
- The hip is 3 in (7.5 cm) wider than the body measurement at each size, to go over a diaper (UK: nappy). The waist is as wide as the hip until the cord is drawn in, so that it pulls on. Choose by the finished measurement you like; no fit is promised beyond the measurements given.
- The cover is worked in rows that are turned. The ch 1 at the start of a row never counts as a stitch: work the first stitch of the row into the first stitch, at the base of the ch 1.
- The waistband and the leg edgings are worked in rounds that are not turned; the right side always faces you. The chain at the start of a round never counts as a stitch: work the first stitch into the stitch at its base.
- A decrease counts as one stitch.
- Whip stitch: hold the two edges together, put the needle through both from back to front, bring the yarn over the edges and go in again from the back, one stitch along.

For your own crochet, gifts and handmade pieces you sell. Do not resell or share this PDF or copies of it.

Instructions

6-12 months, to fit waist 18½ in (47 cm). US terms.

ch chain, **sl st** slip stitch, **sc** single crochet (UK double crochet), **hdc** half double crochet (UK half treble), **dc** double crochet (UK treble), **Rnd** round, **st** stitch, **sp** space.

RS right side, the one that shows.

2 hdc in next st: both in one stitch. **hdc in each of next 2 sts**: one in each. **ch-1 sp**: the gap under the one chain; the hook goes in the gap.

[ ] 44 times: work what is inside 44 times in all.

(44 hdc): the stitches you have when the row is done. **How to read a pattern**.

Special stitches

hdc2tog (half double crochet 2 stitches together (UK half treble 2 together)): [yarn over, insert the hook in the next stitch and pull up a loop] twice (5 loops on the hook); yarn over and pull through all 5 loops.

fpdc (front post double crochet (UK front post treble)): Yarn over, insert the hook from the front to the back and to the front again around the post of the stitch named, pull up a loop, [yarn over and pull through 2 loops] twice. The front is the side that faces you. A post stitch takes the place of the stitch it is worked around: do not work into the top of that stitch as well.

bpdc (back post double crochet (UK back post treble)): As fpdc, but insert the hook from the back to the front and to the back again around the post.

Cover

Yarn A, fawn.

☐ **Foundation**	The cover is one piece: it begins at the front waist, goes down to the crotch and up again to the back waist. Rows 1 to 10 are the front, above the legs; rows 11 to 20 shape the front leg edges; rows 21 to 24 are the crotch; rows 25 to 38 shape the back leg edges; rows 39 to 48 are the back, above the legs. With yarn A, ch 45.	
☐ **Row 1 (RS)**	Hdc in 2nd ch from hook and in each ch across	(44 hdc)
☐ **Rows 2 to 10**	Ch 1, turn; hdc in each st across	(44 hdc)
2 3 4 5 6 7 8 9 10		
☐ **Rows 11 to 14**	Ch 1, turn; hdc2tog twice, hdc in each st across to last 4 sts, hdc2tog twice	(28 hdc)
11 12 13 14		
☐ **Rows 15 to 20**	Ch 1, turn; hdc2tog, hdc in each st across to last 2 sts, hdc2tog	(16 hdc)
15 16 17 18 19 20		
☐ **Rows 21 to 24**	Ch 1, turn; hdc in each st across	(16 hdc)
21 22 23 24		
☐ **Rows 25 to 28**	Ch 1, turn; 2 hdc in each of next 2 sts, hdc in each st across to last 2 sts, 2 hdc in each of next 2 sts	(32 hdc)
25 26 27 28		
☐ **Rows 29 to 30**	Ch 1, turn; 2 hdc in next st, hdc in each st across to last st, 2 hdc in next st	(36 hdc)
29 30		

For your own crochet, gifts and handmade pieces you sell. Do not resell or share this PDF or copies of it.

☐ **Row 31**	Ch 1, turn; hdc in each st across	(36 hdc)
☐ **Rows 32 to 39**	Repeat Rows 30 and 31, 4 more times (38, 40, 42, 44 hdc at the ends of the repeats)	(44 hdc)
	32 33 34 35 36 37 38 39	
☐ **Rows 40 to 48**	Ch 1, turn; hdc in each st across	(44 hdc)
	40 41 42 43 44 45 46 47 48	
☐ **End**	Fasten off, leaving an end of about 12 in (30 cm) for sewing. Side seams: fold the piece at the crotch, right sides together, so that the foundation chain lies along row 48. At each side sew the ends of rows 1 to 10 to the ends of rows 48 to 39, row 1 to row 48 and row 10 to row 39, in whip stitch (over and over the two edges), with the long end at one side and a new length of yarn A at the other. Turn the right side out.	

Waistband

Yarn B, white.

☐ **Foundation**	With the right side facing and the waist uppermost, join yarn B at the right side seam (as worn); ch 1, beginning in the st next to the seam, sc in each of the 44 sts of row 48 of the cover piece, across the back, then sc in each of the 44 chs of the foundation chain of the cover piece, along their free side, across the front (88 sc); the ch skipped at the start of row 1 stays free; join with sl st in first sc. This is rnd 1.	
☐ **Rnd 2**	Ch 2; **[**dc in next st, ch 1, skip next st**] 44 times**; join with sl st in first dc	(44 dc, 44 ch-1 sps)
☐ **Rnd 3**	Ch 2; **[**fpdc around next st, dc in next ch-1 sp**] 44 times**; join with sl st in first fpdc	(44 fpdcs, 44 dc)
☐ **End**	Fasten off.	

Leg edging: make 2

Yarn B, white.

☐ **Foundation**	With the right side facing, join yarn B at the lower end of a side seam; ch 2, work along the leg edge, in the ends of the 28 rows that go from this seam down to the crotch and up again to this seam (at the right side seam, as worn, from row 11 to row 38; at the left side seam from row 38 to row 11): [dc in the end of each of next 3 rows, 2 dc in the end of next row] 4 times, [dc in the end of each of next 2 rows, 2 dc in the end of next row] 4 times (36 dc); join with sl st in first dc. This is rnd 1.	
☐ **Rnd 2**	Ch 2; **[**fpdc around next st, bpdc around next st**] 18 times**; join with sl st in first fpdc	(18 fpdcs, 18 bpdcs)
☐ **End**	Fasten off. Work the second leg edging in the same way at the other side seam.	

For your own crochet, gifts and handmade pieces you sell. Do not resell or share this PDF or copies of it.

Cord

Yarn A, fawn.

☐ **Foundation**	With yarn A, ch 141.	
☐ **Row 1**	Sl st in 2nd ch from hook and in each ch across	(140 sl sts)
☐ **End**	The cord is about 30½ in (77.5 cm) long (the slip stitches draw the chain in). Fasten off.	

Assembly

1. Tail: wind yarn B 150 times around a piece of card 3¼ in (8.5 cm) wide. Slide the loops off the card, tie them very firmly around the middle with a doubled length of yarn B, about 20 in (50 cm) long, and knot it. Cut the loops at both ends, and trim the pompom to a ball about 2¾ in (7 cm) across. Keep the ends of the tie long. The pompom and its tie take about 29 yd (27 m) of the yarn B above.

2. Lay the cover with its back up. Put the pompom on row 35, halfway between the two leg edges. Take the two ends of the tie through the cover about ½ in (1.5 cm) apart, knot them firmly on the wrong side, and sew through the middle of the pompom and the cover several times before you fasten off. It must be sewn on firmly: see that no strand pulls out, and look at it again before every wear.

3. Thread the cord through the spaces of rnd 2 of the waistband. There are 44, counted from the join; spaces 23 to 44 are across the front. Go in at space 34 from the outside, come out at the next space, and so on, in and out, around to space 33, where the cord comes out again. Knot each end of the cord and weave its yarn end into the knot.

4. Draw the waist in until it sits well, and tie a bow at the front. See that the waist still pulls on over the diaper (UK: nappy), then sew the bow and the two ends of the cord flat to the waistband with a few stitches of yarn, so that nothing hangs loose; snip these stitches when the waist is to be let out.

Finishing

- Weave in all the ends. Wash as the yarn label says and lay flat to the measurements to dry.

In all: 2 pieces.

Found a mistake in this pattern? Tell us at flossfield.com, under Make a request.

For your own crochet, gifts and handmade pieces you sell. Do not resell or share this PDF or copies of it.