Crew neck button cardigan

Size M · US terms



Finished size

About 40¼ in (102 cm) at the bust and about 22 in (56 cm) long

To fit a bust of 37 in (94 cm)

Skill

Easy

Basic stitches, simple shaping and seams.

Yarn

Medium (4)

Hook

5.5 mm (US I-9)

Gauge

13 stitches and 11 rows to 4 in (10 cm)

In half double crochet.

You will need

Yarn: cornflower, medium (4) **about 1,250 yd (1,143 m), an estimate**

Hook: 5.5 mm (US I-9). Also: yarn needle, scissors, tape measure, stitch markers, 5 buttons, 3/4 in (20 mm) across and sewing thread and a sewing needle.

To find how many balls: divide by the length on your yarn's label and round up. The estimate is from the stitches of this size at this gauge.

Sizes

Size	To fit bust	Bust	Length	Armhole depth	Sleeve	Upper sleeve	Back neck	Yarn, an estimate
XS	29 in (73.5 cm)	33 in (84 cm)	22 in (56 cm)	7¼ in (18.5 cm)	17¾ in (45 cm)	14¾ in (37.5 cm)	6¾ in (17 cm)	about 1,100 yd (1,006 m)
Size S	33 in (84 cm)	37¼ in (94.5 cm)	22 in (56 cm)	7¼ in (18.5 cm)	17¾ in (45 cm)	14¾ in (37.5 cm)	6¾ in (17 cm)	about 1,200 yd (1,097 m)
Size M (this file)	**37 in (94 cm)**	**40¼ in (102 cm)**	**22 in (56 cm)**	**8 in (20.5 cm)**	**17 in (43 cm)**	**16 in (40.5 cm)**	**7½ in (19 cm)**	**about 1,250 yd (1,143 m)**
Size L	41 in (104 cm)	45¼ in (115 cm)	22¾ in (58 cm)	8¾ in (22 cm)	17 in (43 cm)	17¼ in (44 cm)	7½ in (19 cm)	about 1,450 yd (1,326 m)
1X	45 in (114.5 cm)	49½ in (125.5 cm)	22¾ in (58 cm)	8¾ in (22 cm)	17 in (43 cm)	17¼ in (44 cm)	7½ in (19 cm)	about 1,500 yd (1,372 m)

For your own crochet, gifts and handmade pieces you sell. Do not resell or share this PDF.

2X	49 in (124.5 cm)	52¾ in (134 cm)	22¾ in (58 cm)	9½ in (24 cm)	17 in (43 cm)	19 in (48.5 cm)	7½ in (19 cm)	about 1,625 yd (1,486 m)
3X	53 in (134.5 cm)	57 in (145 cm)	23½ in (59.5 cm)	10¼ in (26 cm)	16¼ in (41.5 cm)	20¼ in (51.5 cm)	7½ in (19 cm)	about 1,725 yd (1,577 m)
4X	57 in (145 cm)	62 in (157.5 cm)	23½ in (59.5 cm)	10¼ in (26 cm)	16¼ in (41.5 cm)	20¼ in (51.5 cm)	7½ in (19 cm)	about 1,875 yd (1,715 m)
5X	61 in (155 cm)	65 in (165 cm)	23½ in (59.5 cm)	11 in (28 cm)	15½ in (39.5 cm)	21½ in (54.5 cm)	7½ in (19 cm)	about 1,975 yd (1,806 m)

Schematic

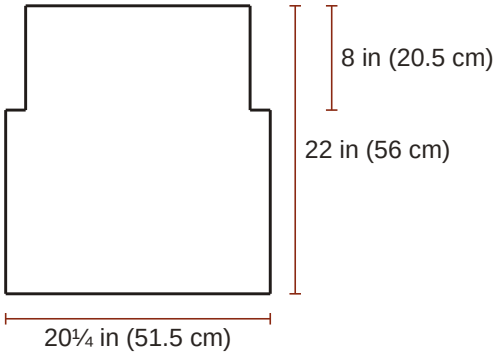

Back

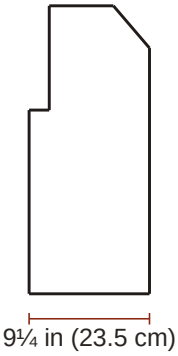

Front (make 2)

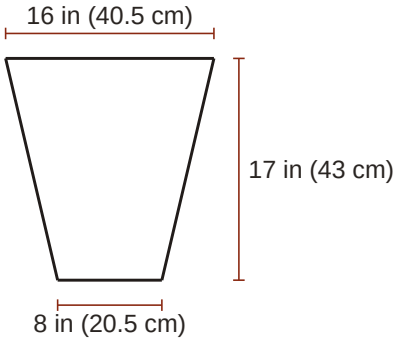

Sleeve (make 2)

Abbreviations

Written in US terms. Where the UK name differs it is given beside the US one.

ch chain
sc single crochet (UK dc, double crochet)
hdc half double crochet (UK htr, half treble)
sp space
st stitch
RS right side

Special stitches

hdc2tog (half double crochet 2 stitches together (UK half treble 2 together)): [Yarn over, insert the hook in the next stitch and pull up a loop] twice (5 loops on the hook); yarn over and pull through all 5 loops. It leaves 1 hdc2tog for the next row.

For your own crochet, gifts and handmade pieces you sell. Do not resell or share this PDF.

Gauge

13 stitches and 11 rows to 4 in (10 cm) in half double crochet.

Ribs: worked sideways, 14 rows and 13 sts to 4 in (10 cm), so a rib of 6 sts is about 1¾ in (4.5 cm) deep.

> **The swatch.** A test piece to measure and pull out. It is not the start of the pattern. Ch 21; begin in the 2nd ch from the hook and work 16 rows of half double crochet on 20 sts, about 6¼ in (16 cm) wide and 5¾ in (14.5 cm) high, and measure 4 in (10 cm) in the middle. Use a larger hook if your swatch is small, a smaller one if it is large. Ribs: worked sideways, 14 rows and 13 sts to 4 in (10 cm), so a rib of 6 sts is about 1¾ in (4.5 cm) deep.

Before you start

- Women's sizes.
- The finished bust is from 3¼ in (8.5 cm) to 5 in (12.5 cm) wider than the body measurement, by the size. Choose by the finished measurement you like; no fit is promised beyond the measurements given.
- In back loop only: insert the hook under the loop of the stitch that is farther from you, and leave the nearer loop free.
- The turning chain (ch 1 for single and half double crochet) never counts as a stitch. Work the first stitch of every row into the first stitch, at the base of the turning chain.
- Odd-numbered rows are right side rows (for the fronts, go by the words at their head). Mark the right side of each piece with a stitch marker or a scrap of yarn.
- To work into a chain space, insert the hook under the whole chain.
- A decrease counts as one stitch.
- The ribs are worked sideways in back-loop single crochet (UK: double crochet). The body and sleeves are worked up from a long edge, one stitch in the end of each rib row. The rib draws in: it is a little narrower than the body above it.
- Stitches worked evenly along row ends: about 7 sc in every 6 rows.
- Sew every seam with the yarn needle and the same yarn.

Instructions

Chosen: Size M. Square brackets [ ] hold a repeat: work what is inside as many times as it says. The count in round brackets at the end of a line is what that line leaves. Tick the box when a row is done. In UK terms sc is double crochet and hdc is half treble.

Hem rib

☐ **Foundation**	Ch 7.	
☐ **Row 1 (RS)**	Sc in 2nd ch from hook and in each ch across	**(6 sc)**
☐ **Rows 2 to 66**	Ch 1, turn; sc in back loop only of each st across	**(6 sc)**

A box for each row, 2 to 66: tick them off as you go.

2 3 4 5 6 7 8 9 10 11 12 13 14 15 16 17 18 19 20 21 22 23 24 25 26 27 28 29 30
31 32 33 34 35 36 37 38 39 40 41 42 43 44 45 46 47 48 49 50 51 52 53 54 55 56 57 58 59
60 61 62 63 64 65 66

☐ **End** Fasten off.

For your own crochet, gifts and handmade pieces you sell. Do not resell or share this PDF.

Back

☐ **Foundation**	Hold the hem rib with one long edge at the top. Join the yarn at the right-hand end of that edge.	
☐ **Row 1 (RS)**	Ch 1, sc in the end of each rib row across	**(66 sc)**
☐ **Rows 2 to 34**	Ch 1, turn; hdc in each st across	**(66 hdc)**

A box for each row, 2 to 34: tick them off as you go.

☐ 2 ☐ 3 ☐ 4 ☐ 5 ☐ 6 ☐ 7 ☐ 8 ☐ 9 ☐ 10 ☐ 11 ☐ 12 ☐ 13 ☐ 14 ☐ 15 ☐ 16 ☐ 17 ☐ 18 ☐ 19 ☐ 20 ☐ 21 ☐ 22 ☐ 23 ☐ 24 ☐ 25 ☐ 26 ☐ 27 ☐ 28 ☐ 29 ☐ 30 ☐ 31 ☐ 32 ☐ 33 ☐ 34

☐ **Row 35**	Fasten off and turn. Skip the first 5 sts and join the yarn in the next st; ch 1, and beginning in that st, hdc in next 56 sts, leave the last 5 sts unworked	**(56 hdc)**
☐ **Rows 36 to 56**	Ch 1, turn; hdc in each st across	**(56 hdc)**

A box for each row, 36 to 56: tick them off as you go.

☐ 36 ☐ 37 ☐ 38 ☐ 39 ☐ 40 ☐ 41 ☐ 42 ☐ 43 ☐ 44 ☐ 45 ☐ 46 ☐ 47 ☐ 48 ☐ 49 ☐ 50 ☐ 51 ☐ 52 ☐ 53 ☐ 54 ☐ 55 ☐ 56

☐ **End**	The back measures about 20¼ in (51.5 cm) wide and 22 in (56 cm) long, and 17¼ in (44 cm) across above the armholes. Fasten off.	

Front hem rib: make 2, one for each front

☐ **Foundation**	Ch 7.	
☐ **Row 1 (RS)**	Sc in 2nd ch from hook and in each ch across	**(6 sc)**
☐ **Rows 2 to 30**	Ch 1, turn; sc in back loop only of each st across	**(6 sc)**

A box for each row, 2 to 30: tick them off as you go.

☐ 2 ☐ 3 ☐ 4 ☐ 5 ☐ 6 ☐ 7 ☐ 8 ☐ 9 ☐ 10 ☐ 11 ☐ 12 ☐ 13 ☐ 14 ☐ 15 ☐ 16 ☐ 17 ☐ 18 ☐ 19 ☐ 20 ☐ 21 ☐ 22 ☐ 23 ☐ 24 ☐ 25 ☐ 26 ☐ 27 ☐ 28 ☐ 29 ☐ 30

☐ **End**	Fasten off.	

Front: make 2

Both fronts are worked from these rows. With the odd-numbered rows on the outside the piece is the left front as worn; turn the second piece over, so that its odd-numbered rows lie on the inside, and it is the right front. When a front is done, mark its outside: in the bands and the finishing 'right side' means the outside.

☐ **Foundation**	Hold a front hem rib with one long edge at the top. Join the yarn at the right-hand end of that edge.	
☐ **Row 1**	Ch 1, sc in the end of each rib row across	**(30 sc)**
☐ **Rows 2 to 34**	Ch 1, turn; hdc in each st across	**(30 hdc)**

A box for each row, 2 to 34: tick them off as you go.

☐ 2 ☐ 3 ☐ 4 ☐ 5 ☐ 6 ☐ 7 ☐ 8 ☐ 9 ☐ 10 ☐ 11 ☐ 12 ☐ 13 ☐ 14 ☐ 15 ☐ 16 ☐ 17 ☐ 18 ☐ 19 ☐ 20 ☐ 21 ☐ 22 ☐ 23 ☐ 24 ☐ 25 ☐ 26 ☐ 27 ☐ 28 ☐ 29 ☐ 30 ☐ 31 ☐ 32 ☐ 33 ☐ 34

☐ **Row 35**	Fasten off and turn. Skip the first 5 sts and join the yarn in the next st; ch 1, and beginning in that st, hdc in next 25 sts	**(25 hdc)**
☐ **Rows 36 to 46**	Ch 1, turn; hdc in each st across	**(25 hdc)**

A box for each row, 36 to 46: tick them off as you go.

☐ 36 ☐ 37 ☐ 38 ☐ 39 ☐ 40 ☐ 41 ☐ 42 ☐ 43 ☐ 44 ☐ 45 ☐ 46

For your own crochet, gifts and handmade pieces you sell. Do not resell or share this PDF.

☐ **Row 47**	Ch 1, turn; hdc in next 21 sts, leave the last 4 sts unworked. The neck edge is at the end of this row	**(21 hdc)**
☐ **Row 48**	Ch 1, turn; hdc2tog, hdc in each st across	**(20 hdc)**
☐ **Row 49**	Ch 1, turn; hdc in each st across to last 2 sts, hdc2tog	**(19 hdc)**
☐ **Row 50**	Ch 1, turn; hdc2tog, hdc in each st across	**(18 hdc)**
☐ **Row 51**	Ch 1, turn; hdc in each st across to last 2 sts, hdc2tog	**(17 hdc)**
☐ **Row 52**	Ch 1, turn; hdc2tog, hdc in each st across	**(16 hdc)**
☐ **Rows 53 to 56**	Ch 1, turn; hdc in each st across	**(16 hdc)**

A box for each row, 53 to 56: tick them off as you go.

☐ 53 ☐ 54 ☐ 55 ☐ 56

☐ **End**	The front measures about 9¼ in (23.5 cm) wide above the hem rib; the button bands, one over the other, add about 1 5/8 in (4.1 cm) to the bust later (the size list counts it). The 16 sts left at the top are the shoulder. Fasten off.	

Cuff rib: make 2

☐ **Foundation**	Ch 7.	
☐ **Row 1 (RS)**	Sc in 2nd ch from hook and in each ch across	**(6 sc)**
☐ **Rows 2 to 26**	Ch 1, turn; sc in back loop only of each st across	**(6 sc)**

A box for each row, 2 to 26: tick them off as you go.

☐ 2 ☐ 3 ☐ 4 ☐ 5 ☐ 6 ☐ 7 ☐ 8 ☐ 9 ☐ 10 ☐ 11 ☐ 12 ☐ 13 ☐ 14 ☐ 15 ☐ 16 ☐ 17 ☐ 18 ☐ 19 ☐ 20 ☐ 21 ☐ 22 ☐ 23 ☐ 24 ☐ 25 ☐ 26

☐ **End**	Fasten off.	

Sleeve: make 2

☐ **Foundation**	Hold a cuff rib with one long edge at the top. Join the yarn at the right-hand end of that edge.	
☐ **Row 1 (RS)**	Ch 1, sc in the end of each rib row across	**(26 sc)**
☐ **Row 2**	Ch 1, turn; hdc in each st across	**(26 hdc)**
☐ **Row 3**	Ch 1, turn; 2 hdc in first st, hdc in each st across to last st, 2 hdc in last st	**(28 hdc)**
☐ **Rows 4 to 5**	Ch 1, turn; hdc in each st across	**(28 hdc)**

A box for each row, 4 to 5: tick them off as you go.

☐ 4 ☐ 5

☐ **Row 6**	Ch 1, turn; 2 hdc in first st, hdc in each st across to last st, 2 hdc in last st	**(30 hdc)**
☐ **Row 7**	Ch 1, turn; hdc in each st across	**(30 hdc)**
☐ **Row 8**	Ch 1, turn; hdc in each st across	**(30 hdc)**
☐ **Row 9**	Ch 1, turn; 2 hdc in first st, hdc in each st across to last st, 2 hdc in last st	**(32 hdc)**
☐ **Row 10**	Ch 1, turn; hdc in each st across	**(32 hdc)**
☐ **Row 11**	Ch 1, turn; hdc in each st across	**(32 hdc)**

For your own crochet, gifts and handmade pieces you sell. Do not resell or share this PDF.

☐ **Row 12**	Ch 1, turn; 2 hdc in first st, hdc in each st across to last st, 2 hdc in last st	**(34 hdc)**
☐ **Row 13**	Ch 1, turn; hdc in each st across	**(34 hdc)**
☐ **Row 14**	Ch 1, turn; hdc in each st across	**(34 hdc)**
☐ **Row 15**	Ch 1, turn; 2 hdc in first st, hdc in each st across to last st, 2 hdc in last st	**(36 hdc)**
☐ **Row 16**	Ch 1, turn; hdc in each st across	**(36 hdc)**
☐ **Row 17**	Ch 1, turn; hdc in each st across	**(36 hdc)**
☐ **Row 18**	Ch 1, turn; 2 hdc in first st, hdc in each st across to last st, 2 hdc in last st	**(38 hdc)**
☐ **Row 19**	Ch 1, turn; hdc in each st across	**(38 hdc)**
☐ **Row 20**	Ch 1, turn; hdc in each st across	**(38 hdc)**
☐ **Row 21**	Ch 1, turn; 2 hdc in first st, hdc in each st across to last st, 2 hdc in last st	**(40 hdc)**
☐ **Row 22**	Ch 1, turn; hdc in each st across	**(40 hdc)**
☐ **Row 23**	Ch 1, turn; hdc in each st across	**(40 hdc)**
☐ **Row 24**	Ch 1, turn; 2 hdc in first st, hdc in each st across to last st, 2 hdc in last st	**(42 hdc)**
☐ **Row 25**	Ch 1, turn; hdc in each st across	**(42 hdc)**
☐ **Row 26**	Ch 1, turn; hdc in each st across	**(42 hdc)**
☐ **Row 27**	Ch 1, turn; 2 hdc in first st, hdc in each st across to last st, 2 hdc in last st	**(44 hdc)**
☐ **Row 28**	Ch 1, turn; hdc in each st across	**(44 hdc)**
☐ **Row 29**	Ch 1, turn; hdc in each st across	**(44 hdc)**
☐ **Row 30**	Ch 1, turn; 2 hdc in first st, hdc in each st across to last st, 2 hdc in last st	**(46 hdc)**
☐ **Row 31**	Ch 1, turn; hdc in each st across	**(46 hdc)**
☐ **Row 32**	Ch 1, turn; hdc in each st across	**(46 hdc)**
☐ **Row 33**	Ch 1, turn; 2 hdc in first st, hdc in each st across to last st, 2 hdc in last st	**(48 hdc)**
☐ **Row 34**	Ch 1, turn; hdc in each st across	**(48 hdc)**
☐ **Row 35**	Ch 1, turn; hdc in each st across	**(48 hdc)**
☐ **Row 36**	Ch 1, turn; 2 hdc in first st, hdc in each st across to last st, 2 hdc in last st	**(50 hdc)**
☐ **Row 37**	Ch 1, turn; hdc in each st across	**(50 hdc)**
☐ **Row 38**	Ch 1, turn; hdc in each st across	**(50 hdc)**
☐ **Row 39**	Ch 1, turn; 2 hdc in first st, hdc in each st across to last st, 2 hdc in last st	**(52 hdc)**
☐ **Row 40**	Ch 1, turn; hdc in each st across	**(52 hdc)**
☐ **Row 41**	Ch 1, turn; hdc in each st across	**(52 hdc)**
☐ **Row 42**	Ch 1, turn; hdc in each st across	**(52 hdc)**
☐ **End**	The sleeve measures about 16 in (40.5 cm) across the top and 17 in (43 cm) long. Fasten off.	

For your own crochet, gifts and handmade pieces you sell. Do not resell or share this PDF.

Button band

Work this at step 4 under Assembly.

☐ **Foundation**	With the right side facing, join the yarn at the neck end of the left front edge (as worn).	
☐ **Row 1 (RS)**	Ch 1, 54 sc evenly along the 46 row ends of the straight front edge, from the neck down, and sc in each of the 6 sts along the end of the front hem rib	**(60 sc)**
☐ **Rows 2 to 6**	Ch 1, turn; sc in each st across	**(60 sc)**

A box for each row, 2 to 6: tick them off as you go.

2 3 4 5 6

☐ **End**	Fasten off.	

Buttonhole band

Work this at step 4 under Assembly.

☐ **Foundation**	With the right side facing, join the yarn at the lower corner of the right front edge (as worn).	
☐ **Row 1 (RS)**	Ch 1, sc in each of the 6 sts along the end of the front hem rib, and 54 sc evenly along the 46 row ends of the straight front edge, up to the neck	**(60 sc)**
☐ **Rows 2 to 3**	Ch 1, turn; sc in each st across	**(60 sc)**

A box for each row, 2 to 3: tick them off as you go.

2 3

☐ **Row 4**	Ch 1, turn; sc in next 3 sts, **[**ch 2, skip next 2 sts, sc in next 11 sts**] 4 times**, ch 2, skip next 2 sts, sc in next 3 sts	**(50 sc, 5 ch-2 sps)**
☐ **Row 5**	Ch 1, turn; sc in next 3 sts, **[**2 sc in next ch-2 sp, sc in next 11 sts**] 4 times**, 2 sc in next ch-2 sp, sc in next 3 sts	**(60 sc)**
☐ **Row 6**	Ch 1, turn; sc in each st across	**(60 sc)**
☐ **End**	Fasten off.	

Neck edging

Work this at step 4 under Assembly.

☐ **Foundation**	With the right side facing, join the yarn at the neck corner of the right front band.	
☐ **Row 1 (RS)**	Ch 1, sc in the end of each of the 6 band rows, sc in each of the 4 sts left at the front neck, 12 sc evenly along the 10 row ends up to the shoulder, sc in each of the 24 sts of the back neck, 12 sc evenly along the 10 row ends down the left front, sc in each of the 4 sts left at the front neck and sc in the end of each of the 6 band rows	**(68 sc)**
☐ **Rows 2 to 3**	Ch 1, turn; sc in each st across	**(68 sc)**

A box for each row, 2 to 3: tick them off as you go.

2 3

☐ **End**	Fasten off.	

For your own crochet, gifts and handmade pieces you sell. Do not resell or share this PDF.

Assembly

1. Shoulders: lay the fronts on the back with right sides together and the side edges level. Sew the 16 shoulder sts of each front to the 16 sts at each end of the back, and leave the middle 24 sts of the back open for the neck.

2. Sleeves: with right sides together, put the middle of the top edge of a sleeve at each shoulder seam. Sew the top edge to the straight edges of the armhole, front and back, and sew the top 1½ in (4 cm) of each side edge of the sleeve to the 5 sts left at the underarm.

3. Sides and sleeves: sew each side seam from the underarm down to the hem, and each sleeve seam from the underarm to the cuff edge.

4. Bands: work the button band, the buttonhole band and then the neck edging, as written above. Sew the buttons to the button band opposite the buttonholes, with the sewing thread.

Finishing

- Weave in all the ends. Wash as the yarn label says and lay flat to the measurements to dry.

In all: 13 pieces; 11,776 stitches; 26 ends to weave in.

Found a mistake in this pattern? Tell us at flossfield.com, under Make a request.

For your own crochet, gifts and handmade pieces you sell. Do not resell or share this PDF.