Hat and diaper cover with button tabs

3-6 months, to fit waist 17½ in (44.5 cm) · US terms



Finished size

About 15 in (38 cm) at the hat and about 6 in (15 cm) at the hat from crown to edge

To fit a waist of 17½ in (44.5 cm) and a hip of 18 in (45.5 cm), head 16½ in (42 cm)

Skill

Easy

Basic stitches, simple shaping and two short seams

Yarn

Light (3), 3 colors

Hook

4.5 mm (US 7)

Gauge

16 stitches and 13½ rows to 4 in (10 cm)

In half double crochet (UK half treble).

What you need

Yarn A: sage, main color	**about 200 yd (183 m), an estimate**
Yarn B: cream, contrast	**about 70 yd (64 m), an estimate**
Yarn C: camel, the cover tab and the hat strap	**about 15 yd (14 m), an estimate**

By weight: about 110 g in all, an estimate, where 100 g is 250 yd (229 m).

Hook: 4.5 mm (US 7), or the size that gives you the gauge. Also: yarn needle, scissors, tape measure and pins.

To find how many balls: divide by the length on your yarn's label and round up. Buy them from one dye lot. The estimate is from the stitches of this size at this gauge.

Sizes

Size	Waist	Yarn, an estimate	Hat around	Hat from crown to edge	Cover around the hip	Around the waistband	Front waist to the middle of the crotch	Back waist to the middle of the crotch	Around each leg opening
Newborn	13½ in (34.5 cm)	about 195 yd (178 m)	13 in (33 cm)	5 in (12.5 cm)	17 in (43 cm)	15 in (38 cm)	5¼ in (13.5 cm)	5¾ in (14.5 cm)	7 in (18 cm)
0-3 months	16½ in (42 cm)	about 245 yd (224 m)	14 in (35.5 cm)	5½ in (14 cm)	20 in (51 cm)	18 in (45.5 cm)	6½ in (16.5 cm)	7½ in (19 cm)	8 in (20.5 cm)
3-6 months (this file)	**17½ in (44.5 cm)**	**about 285 yd (261 m)**	**15 in (38 cm)**	**6 in (15 cm)**	**21 in (53.5 cm)**	**19 in (48.5 cm)**	**7 in (18 cm)**	**8¼ in (21 cm)**	**8½ in (21.5 cm)**
6-12 months	18½ in (47 cm)	about 320 yd (293 m)	16 in (40.5 cm)	6¼ in (16 cm)	22 in (56 cm)	20 in (51 cm)	7¼ in (18.5 cm)	8½ in (21.5 cm)	9 in (23 cm)

For your own crochet, gifts and handmade pieces you sell. Do not resell or share this PDF or copies of it.

Schematic

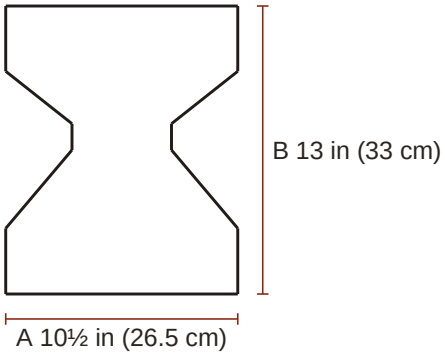

Cover
A half the cover the hip
B from top to bottom

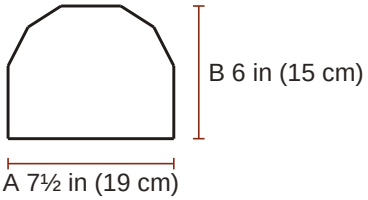

Hat, laid flat
A half the hat
B the hat from crown to edge

Gauge

16 stitches and 13½ rows to 4 in (10 cm) in half double crochet.

> **The swatch.** A test piece to measure and pull out. It is not the start of the pattern. Ch 25; begin in the 2nd ch from the hook and work 20 rows of half double crochet on 24 sts, about 6 in (15 cm) wide and 6 in (15 cm) high, and measure 4 in (10 cm) in the middle. Use a larger hook if your swatch is small, a smaller one if it is large. Edgings: 16 sts to 4 in (10 cm) in double crochet (UK: treble); one round of single crochet, one of double crochet and one of post stitches are about 1 1/8 in (2.9 cm) high together. Hat: the rounds have the same gauge as the rows of the cover. Tabs, strap and buttons: single crochet (UK: double crochet), about 18½ rows or rounds to 4 in (10 cm).

Notes

- The hat is ½ to 1½ in (1.5 to 4 cm) smaller around than the head it is for, and stretches. The hip of the cover is 3 in (7.5 cm) wider than the body measurement at each size, to go over a diaper (UK: nappy). Choose by the finished measurement you like; no fit is promised beyond the measurements given.
- The cover is worked in rows that are turned. The ch 1 at the start of a row never counts as a stitch: work the first stitch of the row into the first stitch, at the base of the ch 1.
- The waistband and the leg edgings are worked in rounds that are not turned; the right side always faces you. The chain at the start of a round never counts as a stitch: work the first stitch into the stitch at its base.
- A decrease counts as one stitch.
- The rounds of the hat and the buttons are not turned either. The hat is worked from the crown down.
- The tabs, the strap and the buttons are for looks: nothing opens. The buttons are crocheted and sewn down all round, so that no hard button is needed.
- Sew every part on firmly, through the fabric several times, weave the ends in well, and look at them before each wear. The hat is for a baby who is awake and watched; take it off for sleep.
- To work a post stitch around a dc2tog, take the hook around both of its legs together.

For your own crochet, gifts and handmade pieces you sell. Do not resell or share this PDF or copies of it.

- Color changes in rounds: work the sl st that joins the round before with the new yarn. Cut the old yarn, leaving an end of about 6 in (15 cm), or, if it is needed again after 6 rnds or fewer, carry it loosely up the inside at the join.
- Whip stitch: hold the two edges together, put the needle through both from back to front, bring the yarn over the edges and go in again from the back, one stitch along.

Instructions

3-6 months, to fit waist 17½ in (44.5 cm). US terms.

ch chain, **sl st** slip stitch, **sc** single crochet (UK double crochet), **hdc** half double crochet (UK half treble), **dc** double crochet (UK treble), **Rnd** round, **st** stitch.
RS right side, the one that shows.
2 hdc in next st: both in one stitch. **hdc in each of next 8 sts**: one in each.
[ ] 8 times: work what is inside 8 times in all.
(8 hdc): the stitches you have when the round is done. **How to read a pattern**.

Special stitches

sc2tog (single crochet 2 stitches together (UK double crochet 2 together)): Insert the hook in the next stitch and pull up a loop, insert the hook in the following stitch and pull up a loop (3 loops on the hook); yarn over and pull through all 3 loops.

hdc2tog (half double crochet 2 stitches together (UK half treble 2 together)): [yarn over, insert the hook in the next stitch and pull up a loop] twice (5 loops on the hook); yarn over and pull through all 5 loops.

dc2tog (double crochet 2 stitches together (UK treble 2 together)): [yarn over, insert the hook in the next stitch and pull up a loop, yarn over and pull through 2 loops] twice (3 loops on the hook); yarn over and pull through all 3 loops.

fpdc (front post double crochet (UK front post treble)): Yarn over, insert the hook from the front to the back and to the front again around the post of the stitch named, pull up a loop, [yarn over and pull through 2 loops] twice. The front is the side that faces you. A post stitch takes the place of the stitch it is worked around: do not work into the top of that stitch as well.

bpdc (back post double crochet (UK back post treble)): As fpdc, but insert the hook from the back to the front and to the back again around the post.

Hat

Yarn A, sage.

☐ **Foundation**	With yarn A, ch 3; join with sl st in first ch to form a ring. Colors: rnds 1 to 8 yarn A; rnds 9 and 10 yarn B; rnds 11 to 16 yarn A; rnds 17 to 19 yarn B.	
☐ **Rnd 1**	Ch 1; 8 hdc in ring; join with sl st in first hdc	(8 hdc)
☐ **Rnd 2**	Ch 1; 2 hdc in each of next 8 sts; join with sl st in first hdc	(16 hdc)
☐ **Rnd 3**	Ch 1; **[**hdc in next st, 2 hdc in next st**] 8 times**; join with sl st in first hdc	(24 hdc)
☐ **Rnd 4**	Ch 1; **[**hdc in next 2 sts, 2 hdc in next st**] 8 times**; join with sl st in first hdc	(32 hdc)
☐ **Rnd 5**	Ch 1; **[**hdc in next 3 sts, 2 hdc in next st**] 8 times**; join with sl st in first hdc	(40 hdc)
☐ **Rnd 6**	Ch 1; hdc in each st around; join with sl st in first hdc	(40 hdc)
☐ **Rnd 7**	Ch 1; hdc in next 2 sts, **[**2 hdc in next st, hdc in next 4 sts**] 7 times**, 2 hdc in next st, hdc in next 2 sts; join with sl st in first hdc	(48 hdc)
☐ **Rnd 8**	Ch 1; hdc in each st around; join with sl st in first hdc	(48 hdc)

For your own crochet, gifts and handmade pieces you sell. Do not resell or share this PDF or copies of it.

☐ **Rnd 9**	Ch 1; **[**hdc in next 5 sts, 2 hdc in next st**] 8 times**; join with sl st in first hdc	(56 hdc)
☐ **Rnd 10**	Ch 1; hdc in each st around; join with sl st in first hdc	(56 hdc)
☐ **Rnd 11**	Ch 1; hdc in next 7 sts, **[**2 hdc in next st, hdc in next 13 sts**] 3 times**, 2 hdc in next st, hdc in next 6 sts; join with sl st in first hdc	(60 hdc)
☐ **Rnds 12 to 16**	Ch 1; hdc in each st around; join with sl st in first hdc	(60 hdc)
12 13 14 15 16		
☐ **Rnd 17**	Ch 2; dc in each st around; join with sl st in first dc	(60 dc)
☐ **Rnds 18 to 19**	Ch 2; **[**fpdc around next st, bpdc around next st**] 30 times**; join with sl st in first fpdc	(30 fpdcs, 30 bpdcs)
18 19		
☐ **End**	Fasten off.	

Cover

Yarn A, sage.

☐ **Foundation**	The cover is one piece: it begins at the front waist, goes down to the crotch and up again to the back waist. Rows 1 to 10 are the front, above the legs; rows 11 to 18 shape the front leg edges; rows 19 to 22 are the crotch; rows 23 to 34 shape the back leg edges; rows 35 to 44 are the back, above the legs. With yarn A, ch 43.	
☐ **Row 1 (RS)**	Hdc in 2nd ch from hook and in each ch across	(42 hdc)
☐ **Rows 2 to 10**	Ch 1, turn; hdc in each st across	(42 hdc)
2 3 4 5 6 7 8 9 10		
☐ **Rows 11 to 14**	Ch 1, turn; hdc2tog twice, hdc in each st across to last 4 sts, hdc2tog twice	(26 hdc)
11 12 13 14		
☐ **Rows 15 to 18**	Ch 1, turn; hdc2tog, hdc in each st across to last 2 sts, hdc2tog	(18 hdc)
15 16 17 18		
☐ **Rows 19 to 22**	Ch 1, turn; hdc in each st across	(18 hdc)
19 20 21 22		
☐ **Rows 23 to 26**	Ch 1, turn; 2 hdc in each of next 2 sts, hdc in each st across to last 2 sts, 2 hdc in each of next 2 sts	(34 hdc)
23 24 25 26		
☐ **Row 27**	Ch 1, turn; hdc in each st across	(34 hdc)
☐ **Row 28**	Ch 1, turn; 2 hdc in next st, hdc in each st across to last st, 2 hdc in next st	(36 hdc)
☐ **Rows 29 to 34**	Repeat Rows 27 and 28, 3 more times (38, 40, 42 hdc at the ends of the repeats)	(42 hdc)
29 30 31 32 33 34		

For your own crochet, gifts and handmade pieces you sell. Do not resell or share this PDF or copies of it.

☐ **Rows 35 to 44**	Ch 1, turn; hdc in each st across	(42 hdc)

35 | 36 | 37 | 38 | 39 | 40 | 41 | 42 | 43 | 44

☐ **End**	Fasten off, leaving an end of about 12 in (30 cm) for sewing. Side seams: fold the piece at the crotch, right sides together, so that the foundation chain lies along row 44. At each side sew the ends of rows 1 to 10 to the ends of rows 44 to 35, row 1 to row 44 and row 10 to row 35, with the long end at one side and a new length of yarn A at the other. Turn the right side out.	

Waistband

Yarn B, cream.

☐ **Foundation**	With the right side facing and the waist uppermost, join yarn B at the right side seam (as worn); ch 1, beginning in the st next to the seam, sc in each of the 42 sts of row 44 of the cover piece, across the back, then sc in each of the 42 chs of the foundation chain of the cover piece, along their free side, across the front (84 sc); the ch skipped at the start of row 1 stays free; join with sl st in first sc. This is rnd 1.	
☐ **Rnd 2**	Ch 2; **[**dc in next 8 sts, dc2tog**] 4 times**, **[**dc in next 9 sts, dc2tog**] 4 times**; join with sl st in first dc	(76 dc)
☐ **Rnd 3**	Ch 2; **[**fpdc around next st, bpdc around next st**] 38 times**; join with sl st in first fpdc	(38 fpdcs, 38 bpdcs)
☐ **End**	Fasten off.	

Leg edging: make 2

Yarn B, cream.

☐ **Foundation**	With the right side facing, join yarn B at the lower end of a side seam; ch 2, work along the leg edge, in the ends of the 24 rows that go from this seam down to the crotch and up again to this seam (at the right side seam, as worn, from row 11 to row 34; at the left side seam from row 34 to row 11): [dc in the end of each of next 2 rows, 2 dc in the end of next row] 4 times, [dc in the end of next row, 2 dc in the end of next row] 6 times (34 dc); join with sl st in first dc. This is rnd 1.	
☐ **Rnd 2**	Ch 2; **[**fpdc around next st, bpdc around next st**] 17 times**; join with sl st in first fpdc	(17 fpdcs, 17 bpdcs)
☐ **End**	Fasten off. Work the second leg edging in the same way at the other side seam.	

Cover tab: make 2

Yarn C, camel.

☐ **Foundation**	With yarn C, ch 6.	
☐ **Row 1 (RS)**	Sc in 2nd ch from hook and in each ch across	(5 sc)
☐ **Rows 2 to 9**	Ch 1, turn; sc in each st across	(5 sc)

2 | 3 | 4 | 5 | 6 | 7 | 8 | 9

☐ **Row 10**	Ch 1, turn; sc2tog, sc in each st across to last 2 sts, sc2tog	(3 sc)
☐ **End**	Row 10 is the rounded end. Fasten off, leaving an end of about 20 in (50 cm) for sewing.	

For your own crochet, gifts and handmade pieces you sell. Do not resell or share this PDF or copies of it.

Hat strap

Yarn C, camel.

☐ **Foundation**	With yarn C, ch 4.	
☐ **Row 1 (RS)**	Sc in 2nd ch from hook and in each ch across	(3 sc)
☐ **Row 2**	Ch 1, turn; 2 sc in first st, sc in each st across to last st, 2 sc in last st	(5 sc)
☐ **Rows 3 to 22**	Ch 1, turn; sc in each st across	(5 sc)

3 4 5 6 7 8 9 10 11 12 13 14 15 16 17 18 19 20 21 22

☐ **Row 23**	Ch 1, turn; sc2tog, sc in each st across to last 2 sts, sc2tog	(3 sc)
☐ **End**	Both ends are rounded. The strap is about 5 in (12.5 cm) long. Fasten off, leaving an end of about 34 in (85 cm) for sewing.	

Crocheted button: make 4

Yarn B, cream.

☐ **Foundation**	With yarn B, ch 3; join with sl st in first ch to form a ring.	
☐ **Rnd 1**	Ch 1; 6 sc in ring; join with sl st in first sc	(6 sc)
☐ **Rnd 2**	Ch 1; 2 sc in each of next 6 sts; join with sl st in first sc	(12 sc)
☐ **End**	The button is about 7/8 in (2.2 cm) across. Fasten off, leaving an end of about 10 in (25 cm) for sewing.	

Assembly

1. Cover tabs: lay the cover with its front up and the waist uppermost. Rows are counted from the foundation chain, and the middle of the front lies between sts 21 and 22 of a row. Lay a tab on each side of the middle with its foundation chain along the lower edge of the waistband and its rounded end toward the crotch, so that its middle lies 8 sts out from the middle of the front, to the left and to the right alike. Pin it and sew it down all round with whip stitch, with its own end.

2. Hat strap: the rnds of the hat are counted from the crown, and the sts of a rnd from its first st, at the middle of the back. The middle of the front lies between sts 30 and 31 of a rnd of 60 sts. Lay the strap across the front of the hat, right side up, with the middle st of each of its rows along rnd 14, so that its lower edge lies along the top of the brim, and with its middle row (row 12) at the middle of the front. Pin it without stretching it and sew it down all round with whip stitch, with its own end.

3. Buttons: sew a crocheted button to each cover tab, with its middle over the middle st of row 8, and a crocheted button to each end of the hat strap, with its middle over the middle st of row 3 and of row 21, with whip stitch all round, with its own end. Then, with a length of yarn C about 10 in (25 cm) long, make one cross stitch over the middle of the button, through the button, the tab or strap and the fabric: two straight stitches of about 3/8 in (1 cm) that cross. Fasten the yarn off on the wrong side.

Finishing

- Weave in all the ends. Wash as the yarn label says and lay flat to the measurements to dry.

In all: 8 pieces.

Found a mistake in this pattern? Tell us at flossfield.com, under Make a request.

For your own crochet, gifts and handmade pieces you sell. Do not resell or share this PDF or copies of it.