Cable sweater with a crew neck

M, to fit bust 37 in (94 cm) · US terms



Finished size

About 42½ in (108 cm) at the bust and about 23½ in (59.5 cm) long

To fit a bust of 37 in (94 cm)

Skill

Intermediate

Post stitch cables, simple shaping and seams

Yarn

Medium (4)

Hook

5.5 mm (US I-9)

Gauge

13 stitches and 11 rows to 4 in (10 cm)

In half double crochet (UK half treble).

What you need

Yarn: any one color (cream in the picture), medium (4) **about 1,425 yd (1,303 m), an estimate**

By weight: about 710 g, an estimate, where 100 g is 200 yd (183 m).

Hook: 5.5 mm (US I-9), or the size that gives you the gauge. Also: yarn needle, scissors, tape measure and stitch markers.

To find how many balls: divide by the length on your yarn's label and round up. Buy them from one dye lot. The estimate is from the stitches of this size at this gauge.

Sizes

Size	To fit bust	Yarn, an estimate	Bust	Length	Armhole depth	Sleeve	Upper sleeve	Cuff	Neck	Back neck
XS	29 in (73.5 cm)	about 1,175 yd (1,074 m)	33¾ in (85.5 cm)	22¾ in (58 cm)	7 in (18 cm)	17 in (43 cm)	14¼ in (36 cm)	8 in (20.5 cm)	20¼ in (51.5 cm)	8¼ in (21 cm)
S	33 in (84 cm)	about 1,300 yd (1,189 m)	37½ in (95 cm)	23½ in (59.5 cm)	7¾ in (19.5 cm)	17 in (43 cm)	15½ in (39.5 cm)	8 in (20.5 cm)	21½ in (54.5 cm)	9 in (23 cm)
M (this file)	**37 in (94 cm)**	**about 1,425 yd (1,303 m)**	**42½ in (108 cm)**	**23½ in (59.5 cm)**	**8 in (20.5 cm)**	**16¼ in (41.5 cm)**	**16 in (40.5 cm)**	**8 in (20.5 cm)**	**21½ in (54.5 cm)**	**9 in (23 cm)**
L	41 in (104 cm)	about 1,525 yd (1,394 m)	46¼ in (117.5 cm)	23½ in (59.5 cm)	8½ in (21.5 cm)	16¼ in (41.5 cm)	17¼ in (44 cm)	8½ in (21.5 cm)	21½ in (54.5 cm)	9 in (23 cm)
1X	45 in (114.5 cm)	about 1,675 yd (1,532 m)	49¾ in (126.5 cm)	24¼ in (61.5 cm)	9¼ in (23.5 cm)	16¼ in (41.5 cm)	18½ in (47 cm)	9¼ in (23.5 cm)	21½ in (54.5 cm)	9 in (23 cm)

For your own crochet, gifts and handmade pieces you sell. Do not resell or share this PDF or copies of it.

2X	49 in (124.5 cm)	about 1,750 yd (1,600 m)	53½ in (136 cm)	24¼ in (61.5 cm)	9½ in (24 cm)	16¼ in (41.5 cm)	19 in (48.5 cm)	9¼ in (23.5 cm)	21½ in (54.5 cm)	9 in (23 cm)
3X	53 in (134.5 cm)	about 1,875 yd (1,715 m)	58½ in (148.5 cm)	24¼ in (61.5 cm)	10¼ in (26 cm)	15½ in (39.5 cm)	20¼ in (51.5 cm)	9¾ in (25 cm)	22¼ in (56.5 cm)	9 in (23 cm)
4X	57 in (145 cm)	about 2,050 yd (1,875 m)	62¼ in (158 cm)	25 in (63.5 cm)	10½ in (26.5 cm)	15½ in (39.5 cm)	21 in (53.5 cm)	9¾ in (25 cm)	22¾ in (58 cm)	9½ in (24 cm)
5X	61 in (155 cm)	about 2,150 yd (1,966 m)	65¾ in (167 cm)	25 in (63.5 cm)	11 in (28 cm)	14¾ in (37.5 cm)	22¼ in (56.5 cm)	10¼ in (26 cm)	22¾ in (58 cm)	9½ in (24 cm)

Schematic

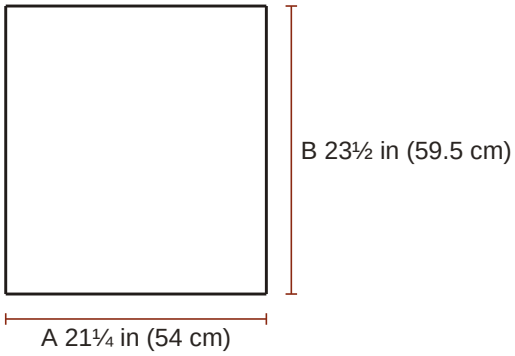

Back
A half the bust
B the length

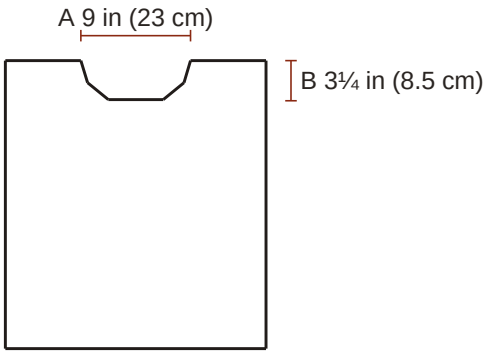

Front
A the neck
B how deep the neck is

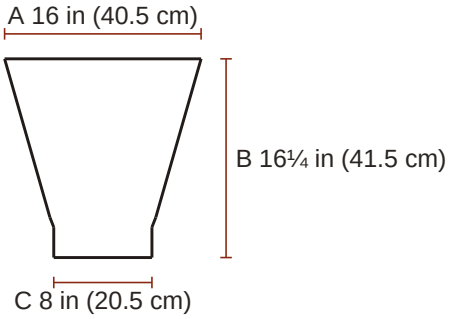

Sleeve (make 2)
A the top of the sleeve, opened flat
B the sleeve
C around the cuff

For your own crochet, gifts and handmade pieces you sell. Do not resell or share this PDF or copies of it.

Gauge

13 stitches and 11 rows to 4 in (10 cm) in half double crochet.

> **The swatch.** A test piece to measure and pull out. It is not the start of the pattern. Ch 21; begin in the 2nd ch from the hook and work 16 rows of half double crochet on 20 sts, about 6¼ in (16 cm) wide and 5¾ in (14.5 cm) high, and measure 4 in (10 cm) in the middle. Use a larger hook if your swatch is small, a smaller one if it is large. Cables: a rope with the 2 sts beside it (8 sts) is about 2¼ in (5.5 cm) wide; the braid with the 2 sts beside it (11 sts) is about 2¾ in (7 cm) wide. The front has 4 sts more than the back for this. Ribs: worked sideways, 14 rows and 13 sts to 4 in (10 cm), so a rib of 8 sts is about 2½ in (6.5 cm) deep.

Notes

- The finished bust is from 4½ in (11.5 cm) to 5½ in (14 cm) wider than the body measurement, by the size. Choose by the finished measurement you like; no fit is promised beyond the measurements given.
- The turning chain (ch 1 for single and half double crochet) never counts as a stitch. Work the first stitch of every row into the first stitch, at the base of the turning chain.
- The chain at the start of a round never counts as a stitch. Work the first stitch of the round into the stitch at its base, where the round was joined.
- Odd-numbered rows are right side rows. Mark the right side of each piece with a stitch marker or a scrap of yarn.
- A decrease counts as one stitch.
- The front stands on row 2, a row of half double crochet: from row 3 the post stitches are worked around the stitches of the row below. On right side rows the cables are worked with fpdc and fptr and the single st at each side of a cable with bpdc; on wrong side rows it is the other way about, so that the cables stand out on the right side all the way up. The last row of the front is worked into the tops of the stitches.
- The ribs are worked sideways in single crochet in the back loop (UK: double crochet). The pieces are worked up from a long edge of a rib. The rib draws in: it is a little narrower than the piece above it.
- Sew every seam with the yarn needle and the same yarn: cut a length about three times as long as the seam.
- In back loop only: insert the hook under the loop of the stitch that is farther from you, and leave the nearer loop free.

For your own crochet, gifts and handmade pieces you sell. Do not resell or share this PDF or copies of it.

Instructions

M, to fit bust 37 in (94 cm). US terms.

ch chain, **sl st** slip stitch, **sc** single crochet (UK double crochet), **hdc** half double crochet (UK half treble), **Rnd** round, **st** stitch.

RS right side, the one that shows.

2 hdc in next st: both in one stitch. **hdc in next 14 sts**: one in each.

(8 sc): the stitches you have when the row is done. **How to read a pattern**.

Special stitches

hdc2tog (half double crochet 2 stitches together (UK half treble 2 together)): [yarn over, insert the hook in the next stitch and pull up a loop] twice (5 loops on the hook); yarn over and pull through all 5 loops.

fpdc (front post double crochet (UK front post treble)): Yarn over, insert the hook from the front to the back and to the front again around the post of the stitch named, pull up a loop, [yarn over and pull through 2 loops] twice. The front is the side that faces you. A post stitch takes the place of the stitch it is worked around: do not work into the top of that stitch as well.

bpdc (back post double crochet (UK back post treble)): As fpdc, but insert the hook from the back to the front and to the back again around the post.

fptr (front post treble crochet (UK front post double treble)): Yarn over twice, insert the hook from the front to the back and to the front again around the post of the stitch named, pull up a loop, [yarn over and pull through 2 loops] 3 times. It takes the place of the stitch it is worked around.

c6l (cable over 6 stitches, leaning left): Worked on a right side row: skip the next 3 sts; fptr around each of the next 3 sts; then, in front of these 3 fptr, fptr around each of the 3 skipped sts, in their order from right to left. The next stitch of the row goes in the st after the 6. It leaves 6 fptr for the next row or round.

c6r (cable over 6 stitches, leaning right): Worked on a right side row: skip the next 3 sts; fptr around each of the next 3 sts; then, behind these 3 fptr, fptr around each of the 3 skipped sts, in their order from right to left: bring the 3 finished fptr toward you and work behind them, with the hook still going around each post from the front. The next stitch of the row goes in the st after the 6. It leaves 6 fptr for the next row or round.

Hem rib: make 2, one for the back and one for the front

☐ **Foundation**	Ch 9.	
☐ **Row 1 (RS)**	Sc in 2nd ch from hook and in each ch across	(8 sc)
☐ **Rows 2 to 69**	Ch 1, turn; sc in back loop only of each st across	(8 sc)

2 3 4 5 6 7 8 9 10 11 12 13 14 15 16 17 18 19 20 21 22 23 24 25 26 27 28 29
30 31 32 33 34 35 36 37 38 39 40 41 42 43 44 45 46 47 48 49 50 51 52 53 54 55 56 57
58 59 60 61 62 63 64 65 66 67 68 69

☐ **End** Fasten off.

Back

☐ **Foundation**	Hold a hem rib with one long edge at the top. Join the yarn at the right-hand end of that edge; ch 1, sc in the end of each rib row across (69 sc). This is row 1, and a right side row.	
☐ **Rows 2 to 58**	Ch 1, turn; hdc in each st across	(69 hdc)

2 3 4 5 6 7 8 9 10 11 12 13 14 15 16 17 18 19 20 21 22 23 24 25 26 27 28 29
30 31 32 33 34 35 36 37 38 39 40 41 42 43 44 45 46 47 48 49 50 51 52 53 54 55 56 57

For your own crochet, gifts and handmade pieces you sell. Do not resell or share this PDF or copies of it.

58

☐ **End**	The back measures about 21¼ in (54 cm) wide and 23½ in (59.5 cm) long, with the rib. Fasten off.

Front

☐ **Foundation**	Hold a hem rib with one long edge at the top. Join the yarn at the right-hand end of that edge; ch 1, sc in the end of each rib row across (69 sc). This is row 1, and a right side row.
☐ **Row 2**	Ch 1, turn; hdc in next 14 sts, 2 hdc in next st, hdc in next 18 sts, 2 hdc in next st, hdc in next st, 2 hdc in next st, hdc in next 18 sts, 2 hdc in next st, hdc in next 14 sts (73 hdc)
☐ **Row 3**	Ch 1, turn; hdc in next 11 sts, bpdc around next st, fpdc around next 6 sts, bpdc around next st, hdc in next 12 sts, bpdc around next st, fpdc around next 9 sts, bpdc around next st, hdc in next 12 sts, bpdc around next st, fpdc around next 6 sts, bpdc around next st, hdc in next 11 sts (46 hdc, 6 bpdcs, 21 fpdcs)
☐ **Row 4**	Ch 1, turn; hdc in next 11 sts, fpdc around next st, bpdc around next 6 sts, fpdc around next st, hdc in next 12 sts, fpdc around next st, bpdc around next 9 sts, fpdc around next st, hdc in next 12 sts, fpdc around next st, bpdc around next 6 sts, fpdc around next st, hdc in next 11 sts (46 hdc, 6 fpdcs, 21 bpdcs)
☐ **Row 5**	Ch 1, turn; hdc in next 11 sts, bpdc around next st, c6l over next 6 sts, bpdc around next st, hdc in next 12 sts, bpdc around next st, c6l over next 6 sts, fpdc around next 3 sts, bpdc around next st, hdc in next 12 sts, bpdc around next st, c6r over next 6 sts, bpdc around next st, hdc in next 11 sts (46 hdc, 6 bpdcs, 18 fptrs, 3 fpdcs)
☐ **Row 6**	Ch 1, turn; hdc in next 11 sts, fpdc around next st, bpdc around next 6 sts, fpdc around next st, hdc in next 12 sts, fpdc around next st, bpdc around next 9 sts, fpdc around next st, hdc in next 12 sts, fpdc around next st, bpdc around next 6 sts, fpdc around next st, hdc in next 11 sts (46 hdc, 6 fpdcs, 21 bpdcs)
☐ **Row 7**	Ch 1, turn; hdc in next 11 sts, bpdc around next st, fpdc around next 6 sts, bpdc around next st, hdc in next 12 sts, bpdc around next st, fpdc around next 9 sts, bpdc around next st, hdc in next 12 sts, bpdc around next st, fpdc around next 6 sts, bpdc around next st, hdc in next 11 sts (46 hdc, 6 bpdcs, 21 fpdcs)
☐ **Row 8**	Ch 1, turn; hdc in next 11 sts, fpdc around next st, bpdc around next 6 sts, fpdc around next st, hdc in next 12 sts, fpdc around next st, bpdc around next 9 sts, fpdc around next st, hdc in next 12 sts, fpdc around next st, bpdc around next 6 sts, fpdc around next st, hdc in next 11 sts (46 hdc, 6 fpdcs, 21 bpdcs)
☐ **Row 9**	Ch 1, turn; hdc in next 11 sts, bpdc around next st, c6l over next 6 sts, bpdc around next st, hdc in next 12 sts, bpdc around next st, fpdc around next 3 sts, c6r over next 6 sts, bpdc around next st, hdc in next 12 sts, bpdc around next st, c6r over next 6 sts, bpdc around next st, hdc in next 11 sts (46 hdc, 6 bpdcs, 18 fptrs, 3 fpdcs)

For your own crochet, gifts and handmade pieces you sell. Do not resell or share this PDF or copies of it.

☐ **Row 10**

Ch 1, turn; hdc in next 11 sts, fpdc around next st, bpdc around next 6 sts, fpdc around next st, hdc in next 12 sts, fpdc around next st, bpdc around next 9 sts, fpdc around next st, hdc in next 12 sts, fpdc around next st, bpdc around next 6 sts, fpdc around next st, hdc in next 11 sts (46 hdc, 6 fpdcs, 21 bpdcs)

☐ **Rows 11 to 42**

Repeat Rows 3 to 10, 4 more times (46 hdc, 6 fpdcs, 21 bpdcs)

11 12 13 14 15 16 17 18 19 20 21 22 23 24 25 26 27 28 29 30 31 32 33 34 35 36 37 38 39 40 41 42

☐ **Row 43**

Ch 1, turn; hdc in next 11 sts, bpdc around next st, fpdc around next 6 sts, bpdc around next st, hdc in next 12 sts, bpdc around next st, fpdc around next 9 sts, bpdc around next st, hdc in next 12 sts, bpdc around next st, fpdc around next 6 sts, bpdc around next st, hdc in next 11 sts (46 hdc, 6 bpdcs, 21 fpdcs)

☐ **Row 44**

Ch 1, turn; hdc in next 11 sts, fpdc around next st, bpdc around next 6 sts, fpdc around next st, hdc in next 12 sts, fpdc around next st, bpdc around next 9 sts, fpdc around next st, hdc in next 12 sts, fpdc around next st, bpdc around next 6 sts, fpdc around next st, hdc in next 11 sts (46 hdc, 6 fpdcs, 21 bpdcs)

☐ **Row 45**

Ch 1, turn; hdc in next 11 sts, bpdc around next st, c6l over next 6 sts, bpdc around next st, hdc in next 12 sts, bpdc around next st, c6l over next 6 sts, fpdc around next 3 sts, bpdc around next st, hdc in next 12 sts, bpdc around next st, c6r over next 6 sts, bpdc around next st, hdc in next 11 sts (46 hdc, 6 bpdcs, 18 fptrs, 3 fpdcs)

☐ **Row 46**

Ch 1, turn; hdc in next 11 sts, fpdc around next st, bpdc around next 6 sts, fpdc around next st, hdc in next 12 sts, fpdc around next st, bpdc around next 9 sts, fpdc around next st, hdc in next 12 sts, fpdc around next st, bpdc around next 6 sts, fpdc around next st, hdc in next 11 sts (46 hdc, 6 fpdcs, 21 bpdcs)

☐ **Row 47**

Ch 1, turn; hdc in next 11 sts, bpdc around next st, fpdc around next 6 sts, bpdc around next st, hdc in next 12 sts, bpdc around next st, fpdc around next 9 sts, bpdc around next st, hdc in next 12 sts, bpdc around next st, fpdc around next 6 sts, bpdc around next st, hdc in next 11 sts (46 hdc, 6 bpdcs, 21 fpdcs)

☐ **Row 48**

Ch 1, turn; hdc in next 11 sts, fpdc around next st, bpdc around next 6 sts, fpdc around next st, hdc in next 12 sts, fpdc around next st, bpdc around next 9 sts, fpdc around next st, hdc in next 12 sts, fpdc around next st, bpdc around next 6 sts, fpdc around next st, hdc in next 11 sts (46 hdc, 6 fpdcs, 21 bpdcs)

☐ **Row 49**

Ch 1, turn; hdc in next 11 sts, bpdc around next st, c6l over next 6 sts, bpdc around next st, hdc in next 12 sts, bpdc around next st, fpdc around next 3 sts, c6r over next 6 sts, bpdc around next st, hdc in next 12 sts, bpdc around next st, c6r over next 6 sts, bpdc around next st, hdc in next 11 sts (46 hdc, 6 bpdcs, 18 fptrs, 3 fpdcs)

☐ **End**

Do not fasten off.

For your own crochet, gifts and handmade pieces you sell. Do not resell or share this PDF or copies of it.

Front, first side of the neck

☐ **Foundation**	Go on from row 49 of the front. This is the right side as worn. The neck edge is at the end of the next row.
☐ **Row 50**	Ch 1, turn; hdc in next 11 sts, fpdc around next st, bpdc around next 6 sts, fpdc around next st, hdc in next 8 sts, leave the last 46 sts unworked (19 hdc, 2 fpdcs, 6 bpdcs)
☐ **Row 51**	Ch 1, turn; hdc2tog, hdc in next 6 sts, bpdc around next st, fpdc around next 6 sts, bpdc around next st, hdc in next 11 sts (18 hdc, 2 bpdcs, 6 fpdcs)
☐ **Row 52**	Ch 1, turn; hdc in next 11 sts, fpdc around next st, bpdc around next 6 sts, fpdc around next st, hdc in next 5 sts, hdc2tog (17 hdc, 2 fpdcs, 6 bpdcs)
☐ **Row 53**	Ch 1, turn; hdc2tog, hdc in next 4 sts, bpdc around next st, c6r over next 6 sts, bpdc around next st, hdc in next 11 sts (16 hdc, 2 bpdcs, 6 fptrs)
☐ **Row 54**	Ch 1, turn; hdc in next 11 sts, fpdc around next st, bpdc around next 6 sts, fpdc around next st, hdc in next 3 sts, hdc2tog (15 hdc, 2 fpdcs, 6 bpdcs)
☐ **Row 55**	Ch 1, turn; hdc2tog, hdc in next 2 sts, bpdc around next st, fpdc around next 6 sts, bpdc around next st, hdc in next 11 sts (14 hdc, 2 bpdcs, 6 fpdcs)
☐ **Row 56**	Ch 1, turn; hdc in next 11 sts, fpdc around next st, bpdc around next 6 sts, fpdc around next st, hdc in next st, hdc2tog (13 hdc, 2 fpdcs, 6 bpdcs)
☐ **Row 57**	Ch 1, turn; hdc in next 2 sts, bpdc around next st, c6r over next 6 sts, bpdc around next st, hdc in next 11 sts (13 hdc, 2 bpdcs, 6 fptrs)
☐ **Row 58**	Ch 1, turn; hdc in next 14 sts, hdc2tog, hdc in next 5 sts (20 hdc)
☐ **End**	The 20 sts left are the shoulder. Fasten off.

Front, second side of the neck

☐ **Foundation**	Go back to row 49 of the front, with the same side facing you as for row 50 of the first side. Skip the next 19 unworked sts of row 49 for the neck and join the yarn in the next st. This is the left side as worn. The first st of row 50 goes in the joining st. The neck edge is at the beginning of that row.
☐ **Row 50**	Ch 1; hdc in next 8 sts, fpdc around next st, bpdc around next 6 sts, fpdc around next st, hdc in next 11 sts (19 hdc, 2 fpdcs, 6 bpdcs)
☐ **Row 51**	Ch 1, turn; hdc in next 11 sts, bpdc around next st, fpdc around next 6 sts, bpdc around next st, hdc in next 6 sts, hdc2tog (18 hdc, 2 bpdcs, 6 fpdcs)
☐ **Row 52**	Ch 1, turn; hdc2tog, hdc in next 5 sts, fpdc around next st, bpdc around next 6 sts, fpdc around next st, hdc in next 11 sts (17 hdc, 2 fpdcs, 6 bpdcs)
☐ **Row 53**	Ch 1, turn; hdc in next 11 sts, bpdc around next st, c6l over next 6 sts, bpdc around next st, hdc in next 4 sts, hdc2tog (16 hdc, 2 bpdcs, 6 fptrs)
☐ **Row 54**	Ch 1, turn; hdc2tog, hdc in next 3 sts, fpdc around next st, bpdc around next 6 sts, fpdc around next st, hdc in next 11 sts (15 hdc, 2 fpdcs, 6 bpdcs)

For your own crochet, gifts and handmade pieces you sell. Do not resell or share this PDF or copies of it.

☐ **Row 55**	Ch 1, turn; hdc in next 11 sts, bpdc around next st, fpdc around next 6 sts, bpdc around next st, hdc in next 2 sts, hdc2tog	(14 hdc, 2 bpdcs, 6 fpdcs)
☐ **Row 56**	Ch 1, turn; hdc2tog, hdc in next st, fpdc around next st, bpdc around next 6 sts, fpdc around next st, hdc in next 11 sts	(13 hdc, 2 fpdcs, 6 bpdcs)
☐ **Row 57**	Ch 1, turn; hdc in next 11 sts, bpdc around next st, c6l over next 6 sts, bpdc around next st, hdc in next 2 sts	(13 hdc, 2 bpdcs, 6 fptrs)
☐ **Row 58**	Ch 1, turn; hdc in next 5 sts, hdc2tog, hdc in next 14 sts	(20 hdc)
☐ **End**	The 20 sts left are the shoulder. Fasten off.	

Cuff rib: make 2

☐ **Foundation**	Ch 9.	
☐ **Row 1 (RS)**	Sc in 2nd ch from hook and in each ch across	(8 sc)
☐ **Rows 2 to 28**	Ch 1, turn; sc in back loop only of each st across	(8 sc)

2 3 4 5 6 7 8 9 10 11 12 13 14 15 16 17 18 19 20 21 22 23 24 25 26 27 28

☐ **End**	Fasten off.	

Sleeve: make 2

☐ **Foundation**	Hold a cuff rib with one long edge at the top. Join the yarn at the right-hand end of that edge; ch 1, sc in the end of each rib row across (28 sc). This is row 1, and a right side row.	
☐ **Row 2**	Ch 1, turn; hdc in each st across	(28 hdc)
☐ **Row 3**	Ch 1, turn; 2 hdc in first st, hdc in each st across to last st, 2 hdc in last st	(30 hdc)
☐ **Rows 4 to 25**	Repeat Rows 2 and 3, 11 more times (32, 34, 36, 38, 40, 42, 44, 46, 48, 50, 52 hdc at the ends of the repeats)	(52 hdc)

4 5 6 7 8 9 10 11 12 13 14 15 16 17 18 19 20 21 22 23 24 25

☐ **Rows 26 to 38**	Ch 1, turn; hdc in each st across	(52 hdc)

26 27 28 29 30 31 32 33 34 35 36 37 38

☐ **End**	The sleeve measures about 16 in (40.5 cm) across the top and 16¼ in (41.5 cm) long, with the cuff. Fasten off.	

For your own crochet, gifts and handmade pieces you sell. Do not resell or share this PDF or copies of it.

Neckband

☐ **Foundation**	Work this at step 2 of Assembly. With the right side facing, join the yarn in the first open st of the back neck, at the right shoulder seam (as worn); ch 1, sc in each of the 29 open sts of the back neck, sc in the end of each of the 9 rows down the left side of the neck, with 2 sc in the 3rd and 7th of them (11 sc), sc in each of the 19 sts left at the front, and sc in the end of each of the 9 rows up the right side of the neck, with 2 sc in the 3rd and 7th of them (11 sc); 70 sc in all; join with sl st in first sc. This is rnd 1.	
☐ **Rnds 2 to 5** 2 3 4 5	Ch 1; sc in each st around; join with sl st in first sc	(70 sc)
☐ **End**	Fasten off.	

Assembly

1. Shoulders: lay the front on the back with right sides together. Sew the 20 sts of each shoulder of the front to the 20 sts at that end of the top edge of the back. The middle 29 sts of the back stay open for the neck.

2. Neckband: work it now, as written above.

3. Markers: at each side edge of the back and of the front, place a marker in the end of row 37. The 22 rows from the marker to the shoulder seam, about 8 in (20.5 cm), are half of the armhole.

4. Sleeves: with right sides together, put the middle of the top edge of a sleeve at a shoulder seam and its two ends at the markers. Sew the top edge on: 26 sts of the sleeve to the 22 row ends of the front, and the other 26 sts to the 22 row ends of the back, about 7 sts to every 6 row ends.

5. Sides and sleeves: fold the sweater at the shoulders, right sides together. Sew each sleeve seam from the cuff edge to the underarm, and go on down the side seam, row end to row end, to the lower edge.

Finishing

- Weave in all the ends. Wash as the yarn label says and lay flat to the measurements to dry.

In all: 4 pieces.

Found a mistake in this pattern? Tell us at flossfield.com, under Make a request.

For your own crochet, gifts and handmade pieces you sell. Do not resell or share this PDF or copies of it.