Chevron sweater with puff stitch bands

M, to fit bust 37 in (94 cm) · US terms



Finished size
About 43½ in (110.5 cm) at the bust and about 22¾ in (58 cm) long
To fit a bust of 37 in (94 cm)

Skill
Intermediate
Ripple rows with increases and decreases, puffs, a plain yoke, seams

Yarn
Medium (4), 4 colors

Hook
5.5 mm (US I-9)

Gauge
13 stitches and 11 rows to 4 in (10 cm)
In half double crochet (UK half treble).

What you need

Yarn A: navy, main color	**about 900 yd (823 m), an estimate**
Yarn B: brick, contrast	**about 190 yd (174 m), an estimate**
Yarn C: sand, color 3	**about 150 yd (137 m), an estimate**
Yarn D: cream, color 4	**about 275 yd (251 m), an estimate**

By weight: about 760 g in all, an estimate, where 100 g is 200 yd (183 m).

Hook: 5.5 mm (US I-9), or the size that gives you the gauge. Also: yarn needle, scissors, tape measure and stitch markers.

To find how many balls: divide by the length on your yarn's label and round up. Buy them from one dye lot. The estimate is from the stitches of this size at this gauge.

Sizes

Size	To fit bust	Yarn, an estimate	Bust	Length	Armhole depth	Sleeve, from the points of the cuff	Upper sleeve	Cuff around	Back neck	Neck
XS	29 in (73.5 cm)	about 1,290 yd (1,180 m)	36 in (91.5 cm)	21¾ in (55 cm)	7 in (18 cm)	16¼ in (41.5 cm)	14¼ in (36 cm)	11¼ in (28.5 cm)	9¼ in (23.5 cm)	22¼ in (56.5 cm)
S	33 in (84 cm)	about 1,395 yd (1,276 m)	39¾ in (101 cm)	22 in (56 cm)	7½ in (19 cm)	16 in (40.5 cm)	14¾ in (37.5 cm)	11¼ in (28.5 cm)	9¼ in (23.5 cm)	22¼ in (56.5 cm)
M (this file)	**37 in (94 cm)**	**about 1,515 yd (1,385 m)**	**43½ in (110.5 cm)**	**22¾ in (58 cm)**	**8 in (20.5 cm)**	**16 in (40.5 cm)**	**16 in (40.5 cm)**	**11¼ in (28.5 cm)**	**9¼ in (23.5 cm)**	**22¼ in (56.5 cm)**

For your own crochet, gifts and handmade pieces you sell. Do not resell or share this PDF or copies of it.

L	41 in (104 cm)	about 1,715 yd (1,568 m)	48½ in (123 cm)	23½ in (59.5 cm)	8½ in (21.5 cm)	15½ in (39.5 cm)	17¼ in (44 cm)	11¼ in (28.5 cm)	9¼ in (23.5 cm)	22¼ in (56.5 cm)
1X	45 in (114.5 cm)	about 1,810 yd (1,655 m)	52¼ in (132.5 cm)	24 in (61 cm)	9 in (23 cm)	15¼ in (38.5 cm)	17¾ in (45 cm)	11¼ in (28.5 cm)	9¾ in (25 cm)	23½ in (59.5 cm)
2X	49 in (124.5 cm)	about 1,945 yd (1,779 m)	56 in (142 cm)	24¼ in (61.5 cm)	9½ in (24 cm)	15¼ in (38.5 cm)	19 in (48.5 cm)	11¼ in (28.5 cm)	9¾ in (25 cm)	23½ in (59.5 cm)
3X	53 in (134.5 cm)	about 2,075 yd (1,897 m)	59¾ in (152 cm)	24½ in (62 cm)	9¾ in (25 cm)	14½ in (37 cm)	19¾ in (50 cm)	11¼ in (28.5 cm)	9¾ in (25 cm)	23½ in (59.5 cm)
4X	57 in (145 cm)	about 2,250 yd (2,057 m)	63½ in (161.5 cm)	25¼ in (64 cm)	10½ in (26.5 cm)	14½ in (37 cm)	21 in (53.5 cm)	11¼ in (28.5 cm)	9¾ in (25 cm)	23½ in (59.5 cm)

Schematic

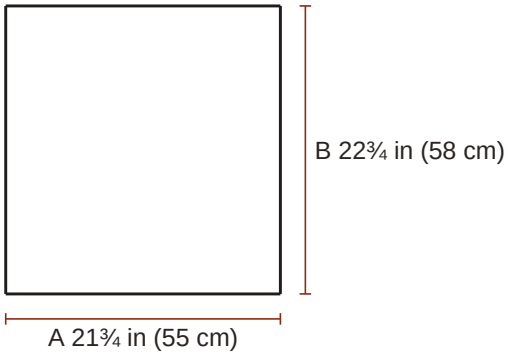

Back
A half the bust
B the length

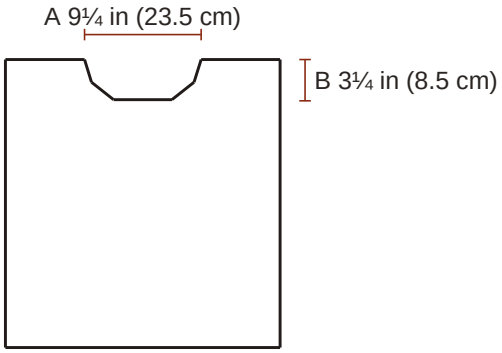

Front
A the neck
B how deep the neck is

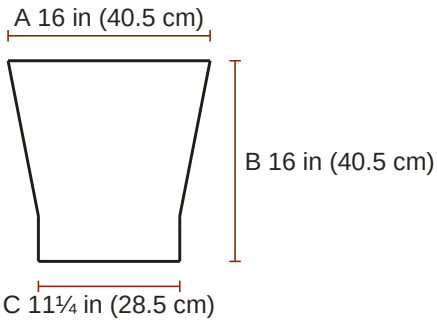

Sleeve (make 2)
A the top of the sleeve, opened flat
B the sleeve
C around the cuff

For your own crochet, gifts and handmade pieces you sell. Do not resell or share this PDF or copies of it.

Gauge

13 stitches and 11 rows to 4 in (10 cm) in half double crochet.

> **The swatch.** A test piece to measure and pull out. It is not the start of the pattern. Ch 21; begin in the 2nd ch from the hook and work 16 rows of half double crochet on 20 sts, about 6¼ in (16 cm) wide and 5¾ in (14.5 cm) high, and measure 4 in (10 cm) in the middle. Use a larger hook if your swatch is small, a smaller one if it is large. The line above is for the yoke and the sleeves. Ripple: 15 sts and 10 rows to 4 in (10 cm) in ripple stitch (count along a row over whole waves, and measure straight across). Ripple swatch: ch 29. Row 1 (RS): Hdc in 2nd ch from hook and in each ch across. Rows 2 to 15: Ch 1, turn; 2 hdc in first st, hdc in next 4 sts, hdc2tog twice, hdc in next 4 sts, 2 hdc in each of next 2 sts, hdc in next 4 sts, hdc2tog twice, hdc in next 4 sts, 2 hdc in last st. The swatch of 15 rows is about 7½ in (19 cm) wide and 6 in (15 cm) high. Check the stitches over the whole width, 2 waves, and the rows over 4 in (10 cm) in the middle. Use a larger hook if your swatch is small, a smaller one if it is large. A row of puffs is as high as a plain ripple row.

Notes

- The finished bust is from 6½ in (16.5 cm) to 7½ in (19 cm) wider than the body measurement, by the size. Choose by the finished measurement you like; no fit is promised beyond the measurements given.
- The turning chain (ch 1 for single and half double crochet) never counts as a stitch. Work the first stitch of every row into the first stitch, at the base of the turning chain.
- The chain at the start of a round never counts as a stitch. Work the first stitch of the round into the stitch at its base, where the round was joined.
- Odd-numbered rows are right side rows. Mark the right side of each piece with a stitch marker or a scrap of yarn.
- A decrease counts as one stitch, and a puff counts as one stitch. Work into the top of a puff as into any other stitch.
- The waves: the increases make the peaks and the decreases the valleys. The puffs are worked on right side rows and stand out on the right side.
- Whip stitch: put the needle in through both edges from the back to the front, take the yarn over the edge, and do the same again a short step farther on.
- Every seam is sewn in whip stitch, with the yarn needle and yarn A: where a step says sew, whip stitch is meant. Cut a length about three times as long as the seam.
- Color changes in rows: work the last yarn over of the last stitch of the row before with the new yarn. Cut the old yarn, leaving an end of about 6 in (15 cm), or, if it is needed again at the same edge within 6 rows and that edge is straight, carry it loosely up the edge.

Instructions

M, to fit bust 37 in (94 cm). US terms.

ch chain, **sl st** slip stitch, **sc** single crochet (UK double crochet), **hdc** half double crochet (UK half treble), **dc** double crochet (UK treble), **tr** treble crochet (UK double treble), **Rnd** round, **st** stitch.
RS right side, the one that shows.
2 hdc in next st: both in one stitch. **hdc in next 5 sts**: one in each.
[ ] 4 times: work what is inside 4 times in all. **( )**: all of it goes into the one place.
(80 hdc): the stitches you have when the row is done. **How to read a pattern**.

For your own crochet, gifts and handmade pieces you sell. Do not resell or share this PDF or copies of it.

Special stitches

hdc2tog (half double crochet 2 stitches together (UK half treble 2 together)): [yarn over, insert the hook in the next stitch and pull up a loop] twice (5 loops on the hook); yarn over and pull through all 5 loops.

puff (puff stitch): Yarn over, insert the hook in the stitch or space named, yarn over and pull up a tall loop; do this 3 times in the same place (7 loops on the hook); yarn over and pull through all 7 loops.

Back

Yarn A, navy.

☐ **Foundation**	In this size the first 5 sts and the last 5 sts of each row up to row 37 are a plain edge beside the waves, and the waves begin and end with half a peak. With yarn A, ch 81. Colors: rows 1 to 4 yarn A; rows 5 and 6 yarn D; rows 7 to 10 yarn B; rows 11 and 12 yarn D; rows 13 to 16 yarn C; rows 17 and 18 yarn D; rows 19 to 22 yarn A; rows 23 and 24 yarn D; rows 25 to 28 yarn B; rows 29 and 30 yarn D; rows 31 to 34 yarn C; rows 35 and 36 yarn D; rows 37 to 59 yarn A.	
☐ **Row 1 (RS)**	Hdc in 2nd ch from hook and in each ch across	(80 hdc)
☐ **Rows 2 to 4**	Ch 1, turn; hdc in next 5 sts, 2 hdc in next st, **[**hdc in next 4 sts, hdc2tog twice, hdc in next 4 sts, 2 hdc in each of next 2 sts**] 4 times**, hdc in next 4 sts, hdc2tog twice, hdc in next 4 sts, 2 hdc in next st, hdc in next 5 sts	(80 hdc)
	2 3 4	
☐ **Row 5**	Ch 1, turn; hdc in next 5 sts, 2 hdc in next st, **[**hdc in next st, puff in next st, hdc in next st, puff in next st, hdc2tog twice, puff in next st, hdc in next st, puff in next st, hdc in next st, (hdc, puff) in next st, (puff, hdc) in next st**] 4 times**, hdc in next st, puff in next st, hdc in next st, puff in next st, hdc2tog twice, puff in next st, hdc in next st, puff in next st, hdc in next st, 2 hdc in next st, hdc in next 5 sts	(52 hdc, 28 puffs)
☐ **Rows 6 to 10**	Ch 1, turn; hdc in next 5 sts, 2 hdc in next st, **[**hdc in next 4 sts, hdc2tog twice, hdc in next 4 sts, 2 hdc in each of next 2 sts**] 4 times**, hdc in next 4 sts, hdc2tog twice, hdc in next 4 sts, 2 hdc in next st, hdc in next 5 sts	(80 hdc)
	6 7 8 9 10	
☐ **Rows 11 to 34**	Repeat Rows 5 to 10, 4 more times	(80 hdc)
	11 12 13 14 15 16 17 18 19 20 21 22 23 24 25 26 27 28 29 30 31 32 33 34	
☐ **Row 35**	Ch 1, turn; hdc in next 5 sts, 2 hdc in next st, **[**hdc in next st, puff in next st, hdc in next st, puff in next st, hdc2tog twice, puff in next st, hdc in next st, puff in next st, hdc in next st, (hdc, puff) in next st, (puff, hdc) in next st**] 4 times**, hdc in next st, puff in next st, hdc in next st, puff in next st, hdc2tog twice, puff in next st, hdc in next st, puff in next st, hdc in next st, 2 hdc in next st, hdc in next 5 sts	(52 hdc, 28 puffs)

For your own crochet, gifts and handmade pieces you sell. Do not resell or share this PDF or copies of it.

☐ **Row 36**

Ch 1, turn; hdc in next 5 sts, 2 hdc in next st,
[hdc in next 4 sts, hdc2tog twice, hdc in next 4 sts, 2 hdc in each of next 2 sts**] 4 times**,
hdc in next 4 sts, hdc2tog twice, hdc in next 4 sts, 2 hdc in next st, hdc in next 5 sts
(80 hdc)

☐ **Row 37**

Ch 1, turn; sc in next 5 sts,
[sc in next 2 sts, hdc in next 2 sts, dc in next 2 sts, tr in next 2 sts,
dc in next 2 sts, hdc in next 2 sts, sc in next 2 sts**] 5 times**,
sc in next 5 sts. This row fills the waves in and makes the top edge level
(30 sc, 20 hdc, 20 dc, 10 tr)

☐ **Row 38**

Ch 1, turn; **[**hdc in next 6 sts, hdc2tog**] 10 times** (70 hdc)

☐ **Rows 39 to 59**

Ch 1, turn; hdc in each st across (70 hdc)

39 40 41 42 43 44 45 46 47 48 49 50 51 52 53 54 55 56 57 58 59

☐ **End**

The back measures about 21¾ in (55 cm) wide and 22¾ in (58 cm) long, from the points of its lower edge to row 59, its top edge. Fasten off.

Front

Yarn A, navy.

☐ **Foundation**

In this size the first 5 sts and the last 5 sts of each row up to row 37 are a plain edge beside the waves, and the waves begin and end with half a peak. With yarn A, ch 81. Colors: rows 1 to 4 yarn A; rows 5 and 6 yarn D; rows 7 to 10 yarn B; rows 11 and 12 yarn D; rows 13 to 16 yarn C; rows 17 and 18 yarn D; rows 19 to 22 yarn A; rows 23 and 24 yarn D; rows 25 to 28 yarn B; rows 29 and 30 yarn D; rows 31 to 34 yarn C; rows 35 and 36 yarn D; rows 37 to 50 yarn A.

☐ **Row 1 (RS)**

Hdc in 2nd ch from hook and in each ch across (80 hdc)

☐ **Rows 2 to 4**

Ch 1, turn; hdc in next 5 sts, 2 hdc in next st,
[hdc in next 4 sts, hdc2tog twice, hdc in next 4 sts, 2 hdc in each of next 2 sts**] 4 times**,
hdc in next 4 sts, hdc2tog twice, hdc in next 4 sts, 2 hdc in next st, hdc in next 5 sts
(80 hdc)

2 3 4

☐ **Row 5**

Ch 1, turn; hdc in next 5 sts, 2 hdc in next st,
[hdc in next st, puff in next st, hdc in next st, puff in next st, hdc2tog twice,
puff in next st, hdc in next st, puff in next st, hdc in next st,
(hdc, puff) in next st, (puff, hdc) in next st**] 4 times**,
hdc in next st, puff in next st, hdc in next st, puff in next st, hdc2tog twice,
puff in next st, hdc in next st, puff in next st, hdc in next st, 2 hdc in next st,
hdc in next 5 sts (52 hdc, 28 puffs)

☐ **Rows 6 to 10**

Ch 1, turn; hdc in next 5 sts, 2 hdc in next st,
[hdc in next 4 sts, hdc2tog twice, hdc in next 4 sts, 2 hdc in each of next 2 sts**] 4 times**,
hdc in next 4 sts, hdc2tog twice, hdc in next 4 sts, 2 hdc in next st, hdc in next 5 sts
(80 hdc)

6 7 8 9 10

For your own crochet, gifts and handmade pieces you sell. Do not resell or share this PDF or copies of it.

☐ **Rows 11 to 34**	Repeat Rows 5 to 10, 4 more times	(80 hdc)

11 12 13 14 15 16 17 18 19 20 21 22 23 24 25 26 27 28 29 30 31 32 33 34

☐ **Row 35**	Ch 1, turn; hdc in next 5 sts, 2 hdc in next st, **[**hdc in next st, puff in next st, hdc in next st, puff in next st, hdc2tog twice, puff in next st, hdc in next st, puff in next st, hdc in next st, (hdc, puff) in next st, (puff, hdc) in next st**] 4 times**, hdc in next st, puff in next st, hdc in next st, puff in next st, hdc2tog twice, puff in next st, hdc in next st, puff in next st, hdc in next st, 2 hdc in next st, hdc in next 5 sts	(52 hdc, 28 puffs)
☐ **Row 36**	Ch 1, turn; hdc in next 5 sts, 2 hdc in next st, **[**hdc in next 4 sts, hdc2tog twice, hdc in next 4 sts, 2 hdc in each of next 2 sts**] 4 times**, hdc in next 4 sts, hdc2tog twice, hdc in next 4 sts, 2 hdc in next st, hdc in next 5 sts	(80 hdc)
☐ **Row 37**	Ch 1, turn; sc in next 5 sts, **[**sc in next 2 sts, hdc in next 2 sts, dc in next 2 sts, tr in next 2 sts, dc in next 2 sts, hdc in next 2 sts, sc in next 2 sts**] 5 times**, sc in next 5 sts. This row fills the waves in and makes the top edge level	(30 sc, 20 hdc, 20 dc, 10 tr)
☐ **Row 38**	Ch 1, turn; **[**hdc in next 6 sts, hdc2tog**] 10 times**	(70 hdc)
☐ **Rows 39 to 50**	Ch 1, turn; hdc in each st across	(70 hdc)

39 40 41 42 43 44 45 46 47 48 49 50

☐ **End**	Do not fasten off.	

Front, first side of the neck

Yarn A, navy.

☐ **Foundation**	Go on from row 50 of the front. This is the left side as worn. The neck edge is at the end of the next row.	
☐ **Row 51**	Ch 1, turn; hdc in next 26 sts, leave the last 44 sts unworked	(26 hdc)
☐ **Row 52**	Ch 1, turn; hdc2tog, hdc in each st across	(25 hdc)
☐ **Row 53**	Ch 1, turn; hdc in each st across to last 2 sts, hdc2tog	(24 hdc)
☐ **Rows 54 to 57**	Repeat Rows 52 and 53, 2 more times (22, 20 hdc at the ends of the repeats)	(20 hdc)

54 55 56 57

☐ **Rows 58 to 59**	Ch 1, turn; hdc in each st across	(20 hdc)

58 59

☐ **End**	The 20 sts left are the shoulder. Fasten off.	

For your own crochet, gifts and handmade pieces you sell. Do not resell or share this PDF or copies of it.

Front, second side of the neck

Yarn A, navy.

☐ **Foundation**	Go back to row 50 of the front, with the same side facing you as for row 51 of the first side. Skip the next 18 unworked sts of row 50 for the neck and join yarn A in the next st. This is the right side as worn. The first st of row 51 goes in the joining st. The neck edge is at the beginning of that row.	
☐ **Row 51**	Ch 1; hdc in each st across	(26 hdc)
☐ **Row 52**	Ch 1, turn; hdc in each st across to last 2 sts, hdc2tog	(25 hdc)
☐ **Row 53**	Ch 1, turn; hdc2tog, hdc in each st across	(24 hdc)
☐ **Rows 54 to 57** 54 55 56 57	Repeat Rows 52 and 53, 2 more times (22, 20 hdc at the ends of the repeats)	(20 hdc)
☐ **Rows 58 to 59** 58 59	Ch 1, turn; hdc in each st across	(20 hdc)
☐ **End**	The 20 sts left are the shoulder. Fasten off.	

Sleeve: make 2

Yarn B, brick.

☐ **Foundation**	The waves of rows 2 to 6 begin and end with half a peak, at the side edges. With yarn B, ch 43. Colors: rows 1 to 4 yarn B; rows 5 and 6 yarn D; rows 7 to 43 yarn A.	
☐ **Row 1 (RS)**	Hdc in 2nd ch from hook and in each ch across	(42 hdc)
☐ **Rows 2 to 4** 2 3 4	Ch 1, turn; 2 hdc in first st, [hdc in next 4 sts, hdc2tog twice, hdc in next 4 sts, 2 hdc in each of next 2 sts] twice, hdc in next 4 sts, hdc2tog twice, hdc in next 4 sts, 2 hdc in last st	(42 hdc)
☐ **Row 5**	Ch 1, turn; 2 hdc in first st, [hdc in next st, puff in next st, hdc in next st, puff in next st, hdc2tog twice, puff in next st, hdc in next st, puff in next st, hdc in next st, (hdc, puff) in next st, (puff, hdc) in next st] twice, hdc in next st, puff in next st, hdc in next st, puff in next st, hdc2tog twice, puff in next st, hdc in next st, puff in next st, hdc in next st, 2 hdc in last st	(26 hdc, 16 puffs)
☐ **Row 6**	Ch 1, turn; 2 hdc in first st, [hdc in next 4 sts, hdc2tog twice, hdc in next 4 sts, 2 hdc in each of next 2 sts] twice, hdc in next 4 sts, hdc2tog twice, hdc in next 4 sts, 2 hdc in last st	(42 hdc)
☐ **Row 7**	Ch 1, turn; [sc in next 2 sts, hdc in next 2 sts, dc in next 2 sts, tr in next 2 sts, dc in next 2 sts, hdc in next 2 sts, sc in next 2 sts] 3 times. This row fills the waves in and makes the top edge level	(12 sc, 12 hdc, 12 dc, 6 tr)
☐ **Row 8**	Ch 1, turn; **[**hdc in next 5 sts, hdc2tog**] 6 times**	(36 hdc)
☐ **Row 9**	Ch 1, turn; 2 hdc in first st, hdc in each st across to last st, 2 hdc in last st	(38 hdc)

For your own crochet, gifts and handmade pieces you sell. Do not resell or share this PDF or copies of it.

☐ **Rows 10 to 12** 10 11 12	Ch 1, turn; hdc in each st across	(38 hdc)
☐ **Rows 13 to 40** 13 14 15 16 17 18 19 20 21 22 23 24 25 26 27 28 29 30 31 32 33 34 35 36 37 38 39 40	Repeat Rows 9 to 12, 7 more times (40, 42, 44, 46, 48, 50, 52 hdc at the ends of the repeats)	(52 hdc)
☐ **Rows 41 to 43** 41 42 43	Ch 1, turn; hdc in each st across	(52 hdc)
☐ **End**	The sleeve measures about 16 in (40.5 cm) across the top and 16 in (40.5 cm) long, from the points of its lower edge. Rows 1 to 7 are the chevron cuff. Fasten off.	

Neckband

Yarn A, navy.

☐ **Foundation**	Work this at step 2 of Assembly. With the right side facing, join yarn A in the first open st of the back neck, at the right shoulder seam (as worn); ch 1, sc in each of the 30 open sts of the back neck, sc in the end of each of the 9 rows down the left side of the neck, with 2 sc in the 2nd, 5th and 8th of them (12 sc), sc in each of the 18 sts left at the front, and sc in the end of each of the 9 rows up the right side of the neck, with 2 sc in the 2nd, 5th and 8th of them (12 sc); 72 sc in all; join with sl st in first sc. This is rnd 1.	
☐ **Rnds 2 to 4** 2 3 4	Ch 1; sc in each st around; join with sl st in first sc	(72 sc)
☐ **End**	Fasten off.	

Assembly

1. Shoulders: lay the front on the back with right sides together. Sew the 20 sts of each shoulder of the front to the 20 sts at that end of the top edge of the back. The middle 30 sts of the back stay open for the neck.

2. Neckband: work it now, as written above.

3. Markers: at each side edge of the back and of the front, place a marker in the end of row 38. The 22 rows from the marker to the shoulder seam, about 8 in (20.5 cm), are half of the armhole.

4. Sleeves: with right sides together, put the middle of the top edge of a sleeve at a shoulder seam and its two ends at the markers. Sew the top edge on: 26 sts of the sleeve to the 22 row ends of the front, and the other 26 sts to the 22 row ends of the back, about 7 sts to every 6 row ends.

5. Sides and sleeves: fold the sweater at the shoulders, right sides together. The side edges of the back and the front are the 5 plain sts beside the waves, and those of the cuffs are half a peak: the two edges of a seam are alike, so their rows meet. Sew each sleeve seam from the lower edge of the cuff to the underarm, and go on down the side seam to the lower edge, row end to row end and stripe to stripe. Turn the sweater right side out.

Finishing

- Weave in all the ends. Wash as the yarn label says and lay flat to the measurements to dry.

Found a mistake in this pattern? Tell us at flossfield.com, under Make a request.

For your own crochet, gifts and handmade pieces you sell. Do not resell or share this PDF or copies of it.