Christmas stripe sweater

Size M · US terms



Finished size

About 44¼ in (112.5 cm) at the bust and about 22¾ in (58 cm) long

To fit a bust of 37 in (94 cm)

Skill

Easy

Basic stitches, simple shaping and seams.

Yarn

Medium (4), 3 colors

Hook

5.5 mm (US I-9)

Gauge

13 stitches and 11 rows to 4 in (10 cm)

In half double crochet.

You will need

Yarn A: cherry, the main color	**about 775 yd (709 m), an estimate**
Yarn B: cream, the second color	**about 375 yd (343 m), an estimate**
Yarn C: forest, the third color	**about 225 yd (206 m), an estimate**

Hook: 5.5 mm (US I-9). Also: yarn needle, scissors, tape measure and stitch markers.

To find how many balls: divide by the length on your yarn's label and round up. The estimate is from the stitches of this size at this gauge.

Sizes

Size	To fit bust	Bust	Length	Armhole depth	Sleeve	Upper sleeve	Back neck	Yarn, an estimate
XS	29 in (73.5 cm)	35¾ in (91 cm)	22 in (56 cm)	7 in (18 cm)	16¼ in (41.5 cm)	14¼ in (36 cm)	9¼ in (23.5 cm)	about 1,135 yd (1,038 m)
Size S	33 in (84 cm)	39½ in (100.5 cm)	22 in (56 cm)	7½ in (19 cm)	16¼ in (41.5 cm)	14¾ in (37.5 cm)	9¼ in (23.5 cm)	about 1,225 yd (1,120 m)
Size M (this file)	**37 in (94 cm)**	**44¼ in (112.5 cm)**	**22¾ in (58 cm)**	**8 in (20.5 cm)**	**15½ in (39.5 cm)**	**16 in (40.5 cm)**	**9¼ in (23.5 cm)**	**about 1,375 yd (1,258 m)**
Size L	41 in (104 cm)	48 in (122 cm)	22¾ in (58 cm)	8½ in (21.5 cm)	16¼ in (41.5 cm)	17¼ in (44 cm)	9¼ in (23.5 cm)	about 1,500 yd (1,372 m)
1X	45 in (114.5 cm)	51¾ in (131.5 cm)	22¾ in (58 cm)	9 in (23 cm)	15½ in (39.5 cm)	17¾ in (45 cm)	9¼ in (23.5 cm)	about 1,575 yd (1,441 m)

For your own crochet, gifts and handmade pieces you sell. Do not resell or share this PDF.

2X	49 in (124.5 cm)	56½ in (143.5 cm)	23½ in (59.5 cm)	9½ in (24 cm)	15½ in (39.5 cm)	19 in (48.5 cm)	9¼ in (23.5 cm)	about 1,725 yd (1,577 m)
3X	53 in (134.5 cm)	60¼ in (153 cm)	23½ in (59.5 cm)	9¾ in (25 cm)	14¾ in (37.5 cm)	19¾ in (50 cm)	9¾ in (25 cm)	about 1,850 yd (1,691 m)
4X	57 in (145 cm)	64 in (162.5 cm)	23½ in (59.5 cm)	10½ in (26.5 cm)	14¾ in (37.5 cm)	21 in (53.5 cm)	9¾ in (25 cm)	about 1,925 yd (1,760 m)
5X	61 in (155 cm)	67¾ in (172 cm)	24¼ in (61.5 cm)	11 in (28 cm)	14 in (35.5 cm)	22¼ in (56.5 cm)	9¾ in (25 cm)	about 2,050 yd (1,875 m)

Schematic

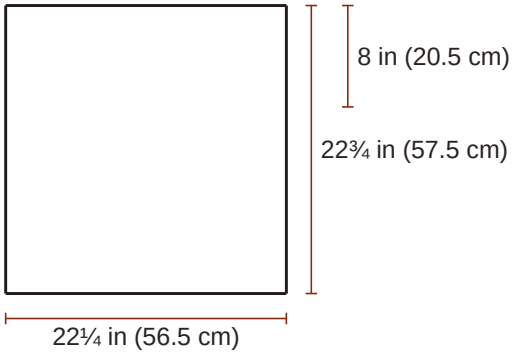

Back

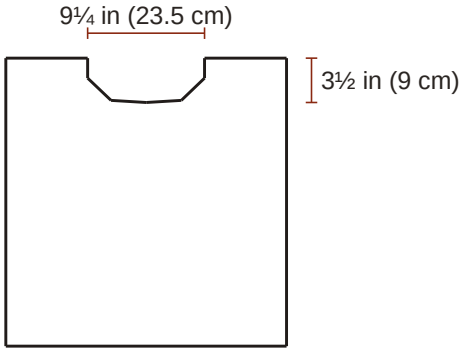

Front

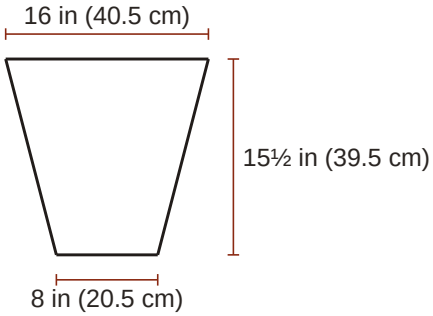

Sleeve (make 2)

For your own crochet, gifts and handmade pieces you sell. Do not resell or share this PDF.

Abbreviations

Written in US terms. Where the UK name differs it is given beside the US one.

ch	chain
sl st	slip stitch (UK ss, slip stitch)
sc	single crochet (UK dc, double crochet)
hdc	half double crochet (UK htr, half treble)
st	stitch
rnd	round
RS	right side

Special stitches

hdc2tog (half double crochet 2 stitches together (UK half treble 2 together)): [Yarn over, insert the hook in the next stitch and pull up a loop] twice (5 loops on the hook); yarn over and pull through all 5 loops. It leaves 1 hdc2tog for the next row.

Gauge

13 stitches and 11 rows to 4 in (10 cm) in half double crochet.

Ribs: worked sideways, 14 rows and 13 sts to 4 in (10 cm), so a rib of 8 sts is about 2½ in (6.5 cm) deep.

> **The swatch.** A test piece to measure and pull out. It is not the start of the pattern. Ch 21; begin in the 2nd ch from the hook and work 16 rows of half double crochet on 20 sts, about 6¼ in (16 cm) wide and 5¾ in (14.5 cm) high, and measure 4 in (10 cm) in the middle. Use a larger hook if your swatch is small, a smaller one if it is large. Ribs: worked sideways, 14 rows and 13 sts to 4 in (10 cm), so a rib of 8 sts is about 2½ in (6.5 cm) deep.

Before you start

- Women's sizes.
- The finished bust is from 6½ in (16.5 cm) to 7½ in (19 cm) wider than the body measurement, by the size. Choose by the finished measurement you like; no fit is promised beyond the measurements given.
- In back loop only: insert the hook under the loop of the stitch that is farther from you, and leave the nearer loop free.
- The turning chain (ch 1 for single and half double crochet) never counts as a stitch. Work the first stitch of every row into the first stitch, at the base of the turning chain.
- The chain at the start of a round never counts as a stitch. Work the first stitch of the round into the stitch at its base, where the round was joined.
- Odd-numbered rows are right side rows. Mark the right side of each piece with a stitch marker or a scrap of yarn.
- A decrease counts as one stitch.
- The ribs are worked sideways in back-loop single crochet (UK: double crochet). The body and sleeves are worked up from a long edge, one stitch in the end of each rib row. The rib draws in: it is a little narrower than the body above it.
- Stitches worked evenly along row ends: about 7 sc in every 6 rows.
- Sew every seam with the yarn needle and yarn A.
- Color changes in rows: work the last yarn over of the last stitch of the row before with the new yarn. Cut the old yarn, leaving an end of about 6 in (15 cm), or, if it is needed again at the same edge within 6 rows and that edge is straight, carry it loosely up the edge.

For your own crochet, gifts and handmade pieces you sell. Do not resell or share this PDF.

Instructions

Chosen: Size M. The count in round brackets at the end of a line is what that line leaves. Tick the box when a row is done. In UK terms sl st is slip stitch, sc is double crochet and hdc is half treble.

Hem rib: make 2, one for the back and one for the front

Yarn B, cream.

☐ **Foundation**	With yarn B, ch 9.	
☐ **Row 1 (RS)**	Sc in 2nd ch from hook and in each ch across	**(8 sc)**
☐ **Rows 2 to 72**	Ch 1, turn; sc in back loop only of each st across	**(8 sc)**

A box for each row, 2 to 72: tick them off as you go.

2 3 4 5 6 7 8 9 10 11 12 13 14 15 16 17 18 19 20 21 22 23 24 25 26 27 28 29 30
31 32 33 34 35 36 37 38 39 40 41 42 43 44 45 46 47 48 49 50 51 52 53 54 55 56 57 58 59
60 61 62 63 64 65 66 67 68 69 70 71 72

☐ **End** Fasten off.

Back

Yarns in order of use: A, cherry; B, cream; C, forest.

Colors, counted from row 1: 6 rows yarn A, 1 row yarn B, 2 rows yarn C, 1 row yarn B; repeat these 10 rows to the end (the last repeat may stop part way).

☐ **Foundation**	Hold a hem rib with one long edge at the top. Join yarn A at the right-hand end of that edge.	
☐ **Row 1 (RS)**	Ch 1, sc in the end of each rib row across	**(72 sc)**
☐ **Rows 2 to 6**	Ch 1, turn; hdc in each st across	**(72 hdc)**

A box for each row, 2 to 6: tick them off as you go.

2 3 4 5 6

☐ **Row 7**	**Yarn B.** Ch 1, turn; hdc in each st across	**(72 hdc)**
☐ **Rows 8 to 9**	**Yarn C.** Ch 1, turn; hdc in each st across	**(72 hdc)**

A box for each row, 8 to 9: tick them off as you go.

8 9

☐ **Row 10**	**Yarn B.** Ch 1, turn; hdc in each st across	**(72 hdc)**
☐ **Rows 11 to 16**	**Yarn A.** Ch 1, turn; hdc in each st across	**(72 hdc)**

A box for each row, 11 to 16: tick them off as you go.

11 12 13 14 15 16

☐ **Row 17**	**Yarn B.** Ch 1, turn; hdc in each st across	**(72 hdc)**
☐ **Rows 18 to 19**	**Yarn C.** Ch 1, turn; hdc in each st across	**(72 hdc)**

A box for each row, 18 to 19: tick them off as you go.

18 19

☐ **Row 20**	**Yarn B.** Ch 1, turn; hdc in each st across	**(72 hdc)**
☐ **Rows 21 to 26**	**Yarn A.** Ch 1, turn; hdc in each st across	**(72 hdc)**

A box for each row, 21 to 26: tick them off as you go.

21 22 23 24 25 26

For your own crochet, gifts and handmade pieces you sell. Do not resell or share this PDF.

☐	**Row 27**	**Yarn B.** Ch 1, turn; hdc in each st across	**(72 hdc)**
☐	**Rows 28 to 29**	**Yarn C.** Ch 1, turn; hdc in each st across	**(72 hdc)**

A box for each row, 28 to 29: tick them off as you go.

28 29

☐	**Row 30**	**Yarn B.** Ch 1, turn; hdc in each st across	**(72 hdc)**
☐	**Rows 31 to 36**	**Yarn A.** Ch 1, turn; hdc in each st across	**(72 hdc)**

A box for each row, 31 to 36: tick them off as you go.

31 32 33 34 35 36

☐	**Row 37**	**Yarn B.** Ch 1, turn; hdc in each st across	**(72 hdc)**
☐	**Rows 38 to 39**	**Yarn C.** Ch 1, turn; hdc in each st across	**(72 hdc)**

A box for each row, 38 to 39: tick them off as you go.

38 39

☐	**Row 40**	**Yarn B.** Ch 1, turn; hdc in each st across	**(72 hdc)**
☐	**Rows 41 to 46**	**Yarn A.** Ch 1, turn; hdc in each st across	**(72 hdc)**

A box for each row, 41 to 46: tick them off as you go.

41 42 43 44 45 46

☐	**Row 47**	**Yarn B.** Ch 1, turn; hdc in each st across	**(72 hdc)**
☐	**Rows 48 to 49**	**Yarn C.** Ch 1, turn; hdc in each st across	**(72 hdc)**

A box for each row, 48 to 49: tick them off as you go.

48 49

☐	**Row 50**	**Yarn B.** Ch 1, turn; hdc in each st across	**(72 hdc)**
☐	**Rows 51 to 56**	**Yarn A.** Ch 1, turn; hdc in each st across	**(72 hdc)**

A box for each row, 51 to 56: tick them off as you go.

51 52 53 54 55 56

☐	**End**	The back measures about 22¼ in (56.5 cm) wide and 22¾ in (58 cm) long. Fasten off.

Front

Yarns in order of use: A, cherry; B, cream; C, forest.

Colors, counted from row 1: 6 rows yarn A, 1 row yarn B, 2 rows yarn C, 1 row yarn B; repeat these 10 rows to the end (the last repeat may stop part way).

☐	**Foundation**	Hold a hem rib with one long edge at the top. Join yarn A at the right-hand end of that edge.	
☐	**Row 1 (RS)**	Ch 1, sc in the end of each rib row across	**(72 sc)**
☐	**Rows 2 to 6**	Ch 1, turn; hdc in each st across	**(72 hdc)**

A box for each row, 2 to 6: tick them off as you go.

2 3 4 5 6

☐	**Row 7**	**Yarn B.** Ch 1, turn; hdc in each st across	**(72 hdc)**
☐	**Rows 8 to 9**	**Yarn C.** Ch 1, turn; hdc in each st across	**(72 hdc)**

A box for each row, 8 to 9: tick them off as you go.

8 9

For your own crochet, gifts and handmade pieces you sell. Do not resell or share this PDF.

☐	**Row 10**	**Yarn B.** Ch 1, turn; hdc in each st across	**(72 hdc)**
☐	**Rows 11 to 16**	**Yarn A.** Ch 1, turn; hdc in each st across	**(72 hdc)**

A box for each row, 11 to 16: tick them off as you go.

☐ 11 ☐ 12 ☐ 13 ☐ 14 ☐ 15 ☐ 16

☐	**Row 17**	**Yarn B.** Ch 1, turn; hdc in each st across	**(72 hdc)**
☐	**Rows 18 to 19**	**Yarn C.** Ch 1, turn; hdc in each st across	**(72 hdc)**

A box for each row, 18 to 19: tick them off as you go.

☐ 18 ☐ 19

☐	**Row 20**	**Yarn B.** Ch 1, turn; hdc in each st across	**(72 hdc)**
☐	**Rows 21 to 26**	**Yarn A.** Ch 1, turn; hdc in each st across	**(72 hdc)**

A box for each row, 21 to 26: tick them off as you go.

☐ 21 ☐ 22 ☐ 23 ☐ 24 ☐ 25 ☐ 26

☐	**Row 27**	**Yarn B.** Ch 1, turn; hdc in each st across	**(72 hdc)**
☐	**Rows 28 to 29**	**Yarn C.** Ch 1, turn; hdc in each st across	**(72 hdc)**

A box for each row, 28 to 29: tick them off as you go.

☐ 28 ☐ 29

☐	**Row 30**	**Yarn B.** Ch 1, turn; hdc in each st across	**(72 hdc)**
☐	**Rows 31 to 36**	**Yarn A.** Ch 1, turn; hdc in each st across	**(72 hdc)**

A box for each row, 31 to 36: tick them off as you go.

☐ 31 ☐ 32 ☐ 33 ☐ 34 ☐ 35 ☐ 36

☐	**Row 37**	**Yarn B.** Ch 1, turn; hdc in each st across	**(72 hdc)**
☐	**Rows 38 to 39**	**Yarn C.** Ch 1, turn; hdc in each st across	**(72 hdc)**

A box for each row, 38 to 39: tick them off as you go.

☐ 38 ☐ 39

☐	**Row 40**	**Yarn B.** Ch 1, turn; hdc in each st across	**(72 hdc)**
☐	**Rows 41 to 46**	**Yarn A.** Ch 1, turn; hdc in each st across	**(72 hdc)**

A box for each row, 41 to 46: tick them off as you go.

☐ 41 ☐ 42 ☐ 43 ☐ 44 ☐ 45 ☐ 46

☐	**End**	Do not fasten off.

Front, first side of the neck

Yarns in order of use: B, cream; C, forest; A, cherry.

Colors: row 47 yarn B; rows 48 and 49 yarn C; row 50 yarn B; rows 51 to 56 yarn A.

☐	**Foundation**	Go on from row 46 of the front. This is the left side as worn. The neck edge is at the end of the next row.	
☐	**Row 47**	Ch 1, turn; hdc in next 28 sts, leave the last 44 sts unworked	**(28 hdc)**
☐	**Row 48**	**Yarn C.** Ch 1, turn; hdc2tog, hdc in each st across	**(27 hdc)**
☐	**Row 49**	Ch 1, turn; hdc in each st across to last 2 sts, hdc2tog	**(26 hdc)**

For your own crochet, gifts and handmade pieces you sell. Do not resell or share this PDF.

☐ **Row 50**	**Yarn B.** Ch 1, turn; hdc2tog, hdc in each st across	**(25 hdc)**
☐ **Row 51**	**Yarn A.** Ch 1, turn; hdc in each st across to last 2 sts, hdc2tog	**(24 hdc)**
☐ **Row 52**	Ch 1, turn; hdc2tog, hdc in each st across	**(23 hdc)**
☐ **Row 53**	Ch 1, turn; hdc in each st across to last 2 sts, hdc2tog	**(22 hdc)**
☐ **Row 54**	Ch 1, turn; hdc2tog, hdc in each st across	**(21 hdc)**
☐ **Rows 55 to 56**	Ch 1, turn; hdc in each st across	**(21 hdc)**

A box for each row, 55 to 56: tick them off as you go.

55 56

☐ **End**	The 21 sts left are the shoulder. Fasten off.	

Front, second side of the neck

Yarns in order of use: B, cream; C, forest; A, cherry.

Colors: row 47 yarn B; rows 48 and 49 yarn C; row 50 yarn B; rows 51 to 56 yarn A.

☐ **Foundation**	Go back to row 46 of the front, with the same side facing you as for row 47 of the first side. Skip the next 16 unworked sts of row 46 for the neck and join yarn B in the next st. This is the right side as worn. The first st of row 47 goes in the joining st. The neck edge is at the beginning of that row.	
☐ **Row 47**	Ch 1; hdc in each st across	**(28 hdc)**
☐ **Row 48**	**Yarn C.** Ch 1, turn; hdc in each st across to last 2 sts, hdc2tog	**(27 hdc)**
☐ **Row 49**	Ch 1, turn; hdc2tog, hdc in each st across	**(26 hdc)**
☐ **Row 50**	**Yarn B.** Ch 1, turn; hdc in each st across to last 2 sts, hdc2tog	**(25 hdc)**
☐ **Row 51**	**Yarn A.** Ch 1, turn; hdc2tog, hdc in each st across	**(24 hdc)**
☐ **Row 52**	Ch 1, turn; hdc in each st across to last 2 sts, hdc2tog	**(23 hdc)**
☐ **Row 53**	Ch 1, turn; hdc2tog, hdc in each st across	**(22 hdc)**
☐ **Row 54**	Ch 1, turn; hdc in each st across to last 2 sts, hdc2tog	**(21 hdc)**
☐ **Rows 55 to 56**	Ch 1, turn; hdc in each st across	**(21 hdc)**

A box for each row, 55 to 56: tick them off as you go.

55 56

☐ **End**	The 21 sts left are the shoulder. Fasten off.	

Cuff rib: make 2

Yarn B, cream.

☐ **Foundation**	With yarn B, ch 9.	
☐ **Row 1 (RS)**	Sc in 2nd ch from hook and in each ch across	**(8 sc)**
☐ **Rows 2 to 26**	Ch 1, turn; sc in back loop only of each st across	**(8 sc)**

A box for each row, 2 to 26: tick them off as you go.

2 3 4 5 6 7 8 9 10 11 12 13 14 15 16 17 18 19 20 21 22 23 24 25 26

☐ **End**	Fasten off.	

For your own crochet, gifts and handmade pieces you sell. Do not resell or share this PDF.

Sleeve: make 2

Yarns in order of use: A, cherry; B, cream; C, forest.

Colors, counted from row 1: 6 rows yarn A, 1 row yarn B, 2 rows yarn C, 1 row yarn B; repeat these 10 rows to the end (the last repeat may stop part way).

☐ **Foundation**	Hold a cuff rib with one long edge at the top. Join yarn A at the right-hand end of that edge.	
☐ **Row 1 (RS)**	Ch 1, sc in the end of each rib row across	**(26 sc)**
☐ **Row 2**	Ch 1, turn; hdc in each st across	**(26 hdc)**
☐ **Row 3**	Ch 1, turn; 2 hdc in first st, hdc in each st across to last st, 2 hdc in last st	**(28 hdc)**
☐ **Row 4**	Ch 1, turn; hdc in each st across	**(28 hdc)**
☐ **Row 5**	Ch 1, turn; 2 hdc in first st, hdc in each st across to last st, 2 hdc in last st	**(30 hdc)**
☐ **Row 6**	Ch 1, turn; hdc in each st across	**(30 hdc)**
☐ **Row 7**	**Yarn B.** Ch 1, turn; 2 hdc in first st, hdc in each st across to last st, 2 hdc in last st	**(32 hdc)**
☐ **Row 8**	**Yarn C.** Ch 1, turn; hdc in each st across	**(32 hdc)**
☐ **Row 9**	Ch 1, turn; 2 hdc in first st, hdc in each st across to last st, 2 hdc in last st	**(34 hdc)**
☐ **Row 10**	**Yarn B.** Ch 1, turn; hdc in each st across	**(34 hdc)**
☐ **Row 11**	**Yarn A.** Ch 1, turn; 2 hdc in first st, hdc in each st across to last st, 2 hdc in last st	**(36 hdc)**
☐ **Row 12**	Ch 1, turn; hdc in each st across	**(36 hdc)**
☐ **Row 13**	Ch 1, turn; 2 hdc in first st, hdc in each st across to last st, 2 hdc in last st	**(38 hdc)**
☐ **Row 14**	Ch 1, turn; hdc in each st across	**(38 hdc)**
☐ **Row 15**	Ch 1, turn; 2 hdc in first st, hdc in each st across to last st, 2 hdc in last st	**(40 hdc)**
☐ **Row 16**	Ch 1, turn; hdc in each st across	**(40 hdc)**
☐ **Row 17**	**Yarn B.** Ch 1, turn; 2 hdc in first st, hdc in each st across to last st, 2 hdc in last st	**(42 hdc)**
☐ **Row 18**	**Yarn C.** Ch 1, turn; hdc in each st across	**(42 hdc)**
☐ **Row 19**	Ch 1, turn; 2 hdc in first st, hdc in each st across to last st, 2 hdc in last st	**(44 hdc)**
☐ **Row 20**	**Yarn B.** Ch 1, turn; hdc in each st across	**(44 hdc)**
☐ **Row 21**	**Yarn A.** Ch 1, turn; 2 hdc in first st, hdc in each st across to last st, 2 hdc in last st	**(46 hdc)**
☐ **Row 22**	Ch 1, turn; hdc in each st across	**(46 hdc)**
☐ **Row 23**	Ch 1, turn; 2 hdc in first st, hdc in each st across to last st, 2 hdc in last st	**(48 hdc)**
☐ **Row 24**	Ch 1, turn; hdc in each st across	**(48 hdc)**
☐ **Row 25**	Ch 1, turn; 2 hdc in first st, hdc in each st across to last st, 2 hdc in last st	**(50 hdc)**
☐ **Row 26**	Ch 1, turn; hdc in each st across	**(50 hdc)**
☐ **Row 27**	**Yarn B.** Ch 1, turn; 2 hdc in first st, hdc in each st across to last st, 2 hdc in last st	**(52 hdc)**

For your own crochet, gifts and handmade pieces you sell. Do not resell or share this PDF.

☐	**Rows 28 to 29**	**Yarn C.** Ch 1, turn; hdc in each st across	**(52 hdc)**

A box for each row, 28 to 29: tick them off as you go.

28 29

☐	**Row 30**	**Yarn B.** Ch 1, turn; hdc in each st across	**(52 hdc)**
☐	**Rows 31 to 36**	**Yarn A.** Ch 1, turn; hdc in each st across	**(52 hdc)**

A box for each row, 31 to 36: tick them off as you go.

31 32 33 34 35 36

☐	**End**	The sleeve measures about 16 in (40.5 cm) across the top and 15½ in (39.5 cm) long. Fasten off.

Neckband

Yarn B, cream.

Work this at step 2 under Assembly.

☐	**Foundation**	With the right side facing, join yarn B at the right shoulder seam (as worn).	
☐	**Rnd 1**	Ch 1, sc in each of the 30 open sts of the back neck, 12 sc evenly along the 10 row ends down the left side of the neck, sc in each of the 16 sts left at the front, 12 sc evenly along the 10 row ends up the right side; join with sl st in first sc	**(70 sc)**
☐	**Rnds 2 to 4**	Ch 1; sc in each st around; join with sl st in first sc	**(70 sc)**

A box for each round, 2 to 4: tick them off as you go.

2 3 4

☐	**End**	Fasten off.

Assembly

1. Shoulders: lay the front on the back with right sides together. Sew the 21 sts at each end of the top edge together, and leave the middle 30 sts of the back open for the neck.

2. Neckband: work it now, as written above.

3. Sleeves: place a marker on each side edge of the body 8 in (20.5 cm) below the shoulder seam (about 22 rows), front and back; this is half the top edge of the sleeve. With right sides together, put the middle of the top edge of a sleeve at each shoulder seam and sew the top edge to the body between the markers.

4. Sides and sleeves: sew each side seam from the marker down to the hem, and each sleeve seam from the underarm to the cuff edge.

Finishing

- Weave in all the ends. Wash as the yarn label says and lay flat to the measurements to dry.

In all: 11 pieces; 12,684 stitches (576 in each hem rib, 4,032 in the back, 3,312 in the front, 238 in the front, first side of the neck, 238 in the front, second side of the neck, 208 in each cuff rib, 1,508 in each sleeve, 280 in the neckband); 64 ends to weave in.

Found a mistake in this pattern? Tell us at flossfield.com, under Make a request.

For your own crochet, gifts and handmade pieces you sell. Do not resell or share this PDF.