# Chunky weekend sweater

Size M · US terms



Finished size
**About 46½ in (118 cm) at the bust and about 22¾ in (58 cm) long**
To fit a bust of 37 in (94 cm)

Skill
**Easy**
Basic stitches, simple shaping and seams.

Yarn
**Bulky (5)**

Hook
**8 mm (US L-11)**

Gauge
**10 stitches and 8½ rows to 4 in (10 cm)**
In half double crochet.

## You will need

Yarn: oat, bulky (5) **about 1,075 yd (983 m), an estimate**

Hook: 8 mm (US L-11). Also: yarn needle, scissors, tape measure and stitch markers.

To find how many balls: divide by the length on your yarn's label and round up. The estimate is from the stitches of this size at this gauge.

## Sizes

| Size | To fit bust | Bust | Length | Armhole depth | Sleeve | Upper sleeve | Back neck | Yarn, an estimate |
|---|---|---|---|---|---|---|---|---|
| **XS** | 29 in (73.5 cm) | 38½ in (98 cm) | 22 in (56 cm) | 7¼ in (18.5 cm) | 16¼ in (41.5 cm) | 14½ in (37 cm) | 8¾ in (22 cm) | about 900 yd (823 m) |
| **Size S** | 33 in (84 cm) | 41½ in (105.5 cm) | 22 in (56 cm) | 7½ in (19 cm) | 16¼ in (41.5 cm) | 15¼ in (38.5 cm) | 8¾ in (22 cm) | about 975 yd (892 m) |
| **Size M (this file)** | **37 in (94 cm)** | **46½ in (118 cm)** | **22¾ in (58 cm)** | **8 in (20.5 cm)** | **15¼ in (38.5 cm)** | **16 in (40.5 cm)** | **8¾ in (22 cm)** | **about 1,075 yd (983 m)** |
| **Size L** | 41 in (104 cm) | 49½ in (125.5 cm) | 22¾ in (58 cm) | 8½ in (21.5 cm) | 16¼ in (41.5 cm) | 16¾ in (42.5 cm) | 9½ in (24 cm) | about 1,175 yd (1,074 m) |
| **1X** | 45 in (114.5 cm) | 54½ in (138.5 cm) | 22¾ in (58 cm) | 8¾ in (22 cm) | 15¼ in (38.5 cm) | 17½ in (44.5 cm) | 9½ in (24 cm) | about 1,225 yd (1,120 m) |
| **2X** | 49 in (124.5 cm) | 57½ in (146 cm) | 23¾ in (60.5 cm) | 9½ in (24 cm) | 15¼ in (38.5 cm) | 19¼ in (49 cm) | 9½ in (24 cm) | about 1,375 yd (1,257 m) |


For your own crochet, gifts and handmade pieces you sell. Do not resell or share this PDF.

| | | | | | | | | |
|---|---|---|---|---|---|---|---|---|
| **3X** | 53 in (134.5 cm) | 62½ in (159 cm) | 23¾ in (60.5 cm) | 10 in (25.5 cm) | 14¼ in (36 cm) | 20 in (51 cm) | 9½ in (24 cm) | about 1,425 yd (1,303 m) |
| **4X** | 57 in (145 cm) | 65½ in (166.5 cm) | 23¾ in (60.5 cm) | 10½ in (26.5 cm) | 14¼ in (36 cm) | 20¾ in (52.5 cm) | 9½ in (24 cm) | about 1,500 yd (1,372 m) |
| **5X** | 61 in (155 cm) | 70½ in (179 cm) | 23¾ in (60.5 cm) | 11¼ in (28.5 cm) | 13½ in (34.5 cm) | 22½ in (57 cm) | 9½ in (24 cm) | about 1,550 yd (1,417 m) |

## Schematic

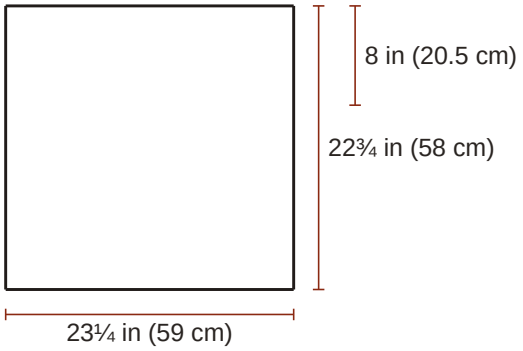


**Back**

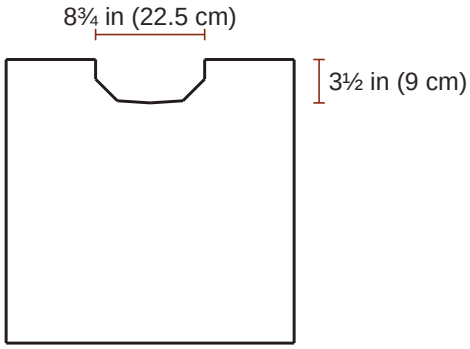


**Front**

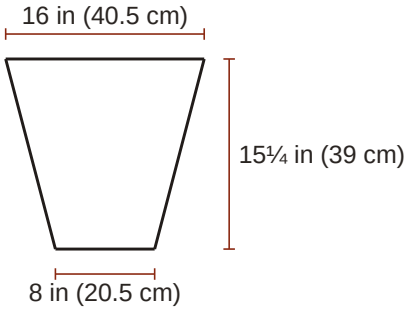


**Sleeve (make 2)**

## Abbreviations

Written in US terms. Where the UK name differs it is given beside the US one.

| | |
|---|---|
| **ch** | chain |
| **sl st** | slip stitch (UK ss, slip stitch) |
| **sc** | single crochet (UK dc, double crochet) |
| **hdc** | half double crochet (UK htr, half treble) |
| **st** | stitch |
| **rnd** | round |
| **RS** | right side |

### Special stitches

**hdc2tog (half double crochet 2 stitches together (UK half treble 2 together)):** [Yarn over, insert the hook in the next stitch and pull up a loop] twice (5 loops on the hook); yarn over and pull through all 5 loops. It leaves 1 hdc2tog for the next row.


For your own crochet, gifts and handmade pieces you sell. Do not resell or share this PDF.

## Gauge

**10 stitches and 8½ rows to 4 in (10 cm)** in half double crochet.

Ribs: worked sideways, 10.5 rows and 10 sts to 4 in (10 cm), so a rib of 8 sts is about 3¼ in (8.5 cm) deep.

> **The swatch.** A test piece to measure and pull out. It is not the start of the pattern. Ch 16; begin in the 2nd ch from the hook and work 13 rows of half double crochet on 15 sts, about 6 in (15 cm) wide and 6 in (15 cm) high, and measure 4 in (10 cm) in the middle. Use a larger hook if your swatch is small, a smaller one if it is large. Ribs: worked sideways, 10.5 rows and 10 sts to 4 in (10 cm), so a rib of 8 sts is about 3¼ in (8.5 cm) deep.

## Before you start

- Women's sizes.
- The finished bust is from 8½ in (21.5 cm) to 9½ in (24 cm) wider than the body measurement, by the size. Choose by the finished measurement you like; no fit is promised beyond the measurements given.
- In back loop only: insert the hook under the loop of the stitch that is farther from you, and leave the nearer loop free.
- The turning chain (ch 1 for single and half double crochet) never counts as a stitch. Work the first stitch of every row into the first stitch, at the base of the turning chain.
- The chain at the start of a round never counts as a stitch. Work the first stitch of the round into the stitch at its base, where the round was joined.
- Odd-numbered rows are right side rows. Mark the right side of each piece with a stitch marker or a scrap of yarn.
- A decrease counts as one stitch.
- The ribs are worked sideways in back-loop single crochet (UK: double crochet). The body and sleeves are worked up from a long edge, one stitch in the end of each rib row. The rib draws in: it is a little narrower than the body above it.
- Stitches worked evenly along row ends: about 7 sc in every 6 rows.
- Sew every seam with the yarn needle and the same yarn.

## Instructions

Chosen: Size M. The count in round brackets at the end of a line is what that line leaves. Tick the box when a row is done. In UK terms sl st is slip stitch, sc is double crochet and hdc is half treble.

### Hem rib: make 2, one for the back and one for the front

| | | |
|---|---|---|
| ☐ **Foundation** | Ch 9. | |
| ☐ **Row 1 (RS)** | Sc in 2nd ch from hook and in each ch across | **(8 sc)** |
| ☐ **Rows 2 to 58** | Ch 1, turn; sc in back loop only of each st across | **(8 sc)** |

A box for each row, 2 to 58: tick them off as you go.

☐ 2 ☐ 3 ☐ 4 ☐ 5 ☐ 6 ☐ 7 ☐ 8 ☐ 9 ☐ 10 ☐ 11 ☐ 12 ☐ 13 ☐ 14 ☐ 15 ☐ 16 ☐ 17 ☐ 18 ☐ 19 ☐ 20 ☐ 21 ☐ 22 ☐ 23 ☐ 24 ☐ 25 ☐ 26 ☐ 27 ☐ 28 ☐ 29 ☐ 30
☐ 31 ☐ 32 ☐ 33 ☐ 34 ☐ 35 ☐ 36 ☐ 37 ☐ 38 ☐ 39 ☐ 40 ☐ 41 ☐ 42 ☐ 43 ☐ 44 ☐ 45 ☐ 46 ☐ 47 ☐ 48 ☐ 49 ☐ 50 ☐ 51 ☐ 52 ☐ 53 ☐ 54 ☐ 55 ☐ 56 ☐ 57 ☐ 58

| | | |
|---|---|---|
| ☐ **End** | Fasten off. | |

### Back

| | | |
|---|---|---|
| ☐ **Foundation** | Hold a hem rib with one long edge at the top. Join the yarn at the right-hand end of that edge. | |
| ☐ **Row 1 (RS)** | Ch 1, sc in the end of each rib row across | **(58 sc)** |


For your own crochet, gifts and handmade pieces you sell. Do not resell or share this PDF.

| | | |
|---|---|---|
| ☐ **Rows 2 to 42** | Ch 1, turn; hdc in each st across | **(58 hdc)** |

A box for each row, 2 to 42: tick them off as you go.

2 3 4 5 6 7 8 9 10 11 12 13 14 15 16 17 18 19 20 21 22 23 24 25 26 27 28 29 30
31 32 33 34 35 36 37 38 39 40 41 42

| | | |
|---|---|---|
| ☐ **End** | The back measures about 23¼ in (59 cm) wide and 22¾ in (58 cm) long. Fasten off. | |

## Front

| | | |
|---|---|---|
| ☐ **Foundation** | Hold a hem rib with one long edge at the top. Join the yarn at the right-hand end of that edge. | |
| ☐ **Row 1 (RS)** | Ch 1, sc in the end of each rib row across | **(58 sc)** |
| ☐ **Rows 2 to 35** | Ch 1, turn; hdc in each st across | **(58 hdc)** |

A box for each row, 2 to 35: tick them off as you go.

2 3 4 5 6 7 8 9 10 11 12 13 14 15 16 17 18 19 20 21 22 23 24 25 26 27 28 29 30
31 32 33 34 35

| | | |
|---|---|---|
| ☐ **End** | Do not fasten off. | |

## Front, first side of the neck

| | | |
|---|---|---|
| ☐ **Foundation** | Go on from row 35 of the front. This is the right side as worn. The neck edge is at the end of the next row. | |
| ☐ **Row 36** | Ch 1, turn; hdc in next 23 sts, leave the last 35 sts unworked | **(23 hdc)** |
| ☐ **Row 37** | Ch 1, turn; hdc2tog, hdc in each st across | **(22 hdc)** |
| ☐ **Row 38** | Ch 1, turn; hdc in each st across to last 2 sts, hdc2tog | **(21 hdc)** |
| ☐ **Row 39** | Ch 1, turn; hdc2tog, hdc in each st across | **(20 hdc)** |
| ☐ **Row 40** | Ch 1, turn; hdc in each st across to last 2 sts, hdc2tog | **(19 hdc)** |
| ☐ **Row 41** | Ch 1, turn; hdc2tog, hdc in each st across | **(18 hdc)** |
| ☐ **Row 42** | Ch 1, turn; hdc in each st across | **(18 hdc)** |
| ☐ **End** | The 18 sts left are the shoulder. Fasten off. | |

## Front, second side of the neck

| | | |
|---|---|---|
| ☐ **Foundation** | Go back to row 35 of the front, with the same side facing you as for row 36 of the first side. Skip the next 12 unworked sts of row 35 for the neck and join the yarn in the next st. This is the left side as worn. The first st of row 36 goes in the joining st. The neck edge is at the beginning of that row. | |
| ☐ **Row 36** | Ch 1; hdc in each st across | **(23 hdc)** |
| ☐ **Row 37** | Ch 1, turn; hdc in each st across to last 2 sts, hdc2tog | **(22 hdc)** |
| ☐ **Row 38** | Ch 1, turn; hdc2tog, hdc in each st across | **(21 hdc)** |
| ☐ **Row 39** | Ch 1, turn; hdc in each st across to last 2 sts, hdc2tog | **(20 hdc)** |
| ☐ **Row 40** | Ch 1, turn; hdc2tog, hdc in each st across | **(19 hdc)** |
| ☐ **Row 41** | Ch 1, turn; hdc in each st across to last 2 sts, hdc2tog | **(18 hdc)** |
| ☐ **Row 42** | Ch 1, turn; hdc in each st across | **(18 hdc)** |
| ☐ **End** | The 18 sts left are the shoulder. Fasten off. | |


For your own crochet, gifts and handmade pieces you sell. Do not resell or share this PDF.

## Cuff rib: make 2

| | | |
|---|---|---|
| ☐ **Foundation** | Ch 9. | |
| ☐ **Row 1 (RS)** | Sc in 2nd ch from hook and in each ch across | **(8 sc)** |
| ☐ **Rows 2 to 20** | Ch 1, turn; sc in back loop only of each st across | **(8 sc)** |

A box for each row, 2 to 20: tick them off as you go.

☐ 2 ☐ 3 ☐ 4 ☐ 5 ☐ 6 ☐ 7 ☐ 8 ☐ 9 ☐ 10 ☐ 11 ☐ 12 ☐ 13 ☐ 14 ☐ 15 ☐ 16 ☐ 17 ☐ 18 ☐ 19 ☐ 20

| | | |
|---|---|---|
| ☐ **End** | Fasten off. | |

## Sleeve: make 2

| | | |
|---|---|---|
| ☐ **Foundation** | Hold a cuff rib with one long edge at the top. Join the yarn at the right-hand end of that edge. | |
| ☐ **Row 1 (RS)** | Ch 1, sc in the end of each rib row across | **(20 sc)** |
| ☐ **Row 2** | Ch 1, turn; hdc in each st across | **(20 hdc)** |
| ☐ **Row 3** | Ch 1, turn; 2 hdc in first st, hdc in each st across to last st, 2 hdc in last st | **(22 hdc)** |
| ☐ **Row 4** | Ch 1, turn; hdc in each st across | **(22 hdc)** |
| ☐ **Row 5** | Ch 1, turn; 2 hdc in first st, hdc in each st across to last st, 2 hdc in last st | **(24 hdc)** |
| ☐ **Row 6** | Ch 1, turn; hdc in each st across | **(24 hdc)** |
| ☐ **Row 7** | Ch 1, turn; 2 hdc in first st, hdc in each st across to last st, 2 hdc in last st | **(26 hdc)** |
| ☐ **Row 8** | Ch 1, turn; hdc in each st across | **(26 hdc)** |
| ☐ **Row 9** | Ch 1, turn; 2 hdc in first st, hdc in each st across to last st, 2 hdc in last st | **(28 hdc)** |
| ☐ **Row 10** | Ch 1, turn; hdc in each st across | **(28 hdc)** |
| ☐ **Row 11** | Ch 1, turn; 2 hdc in first st, hdc in each st across to last st, 2 hdc in last st | **(30 hdc)** |
| ☐ **Row 12** | Ch 1, turn; hdc in each st across | **(30 hdc)** |
| ☐ **Row 13** | Ch 1, turn; 2 hdc in first st, hdc in each st across to last st, 2 hdc in last st | **(32 hdc)** |
| ☐ **Row 14** | Ch 1, turn; hdc in each st across | **(32 hdc)** |
| ☐ **Row 15** | Ch 1, turn; 2 hdc in first st, hdc in each st across to last st, 2 hdc in last st | **(34 hdc)** |
| ☐ **Row 16** | Ch 1, turn; hdc in each st across | **(34 hdc)** |
| ☐ **Row 17** | Ch 1, turn; 2 hdc in first st, hdc in each st across to last st, 2 hdc in last st | **(36 hdc)** |
| ☐ **Row 18** | Ch 1, turn; hdc in each st across | **(36 hdc)** |
| ☐ **Row 19** | Ch 1, turn; 2 hdc in first st, hdc in each st across to last st, 2 hdc in last st | **(38 hdc)** |
| ☐ **Row 20** | Ch 1, turn; hdc in each st across | **(38 hdc)** |
| ☐ **Row 21** | Ch 1, turn; 2 hdc in first st, hdc in each st across to last st, 2 hdc in last st | **(40 hdc)** |
| ☐ **Rows 22 to 26** | Ch 1, turn; hdc in each st across | **(40 hdc)** |

A box for each row, 22 to 26: tick them off as you go.

☐ 22 ☐ 23 ☐ 24 ☐ 25 ☐ 26

| | | |
|---|---|---|
| ☐ **End** | The sleeve measures about 16 in (40.5 cm) across the top and 15¼ in (38.5 cm) long. Fasten off. | |


For your own crochet, gifts and handmade pieces you sell. Do not resell or share this PDF.

### Neckband

Work this at step 2 under Assembly.

| | | |
|---|---|---|
| ☐ **Foundation** | With the right side facing, join the yarn at the right shoulder seam (as worn). | |
| ☐ **Rnd 1** | Ch 1, sc in each of the 22 open sts of the back neck,<br>8 sc evenly along the 7 row ends down the left side of the neck,<br>sc in each of the 12 sts left at the front,<br>8 sc evenly along the 7 row ends up the right side; join with sl st in first sc | **(50 sc)** |
| ☐ **Rnds 2 to 5** | Ch 1; sc in each st around; join with sl st in first sc | **(50 sc)** |

A box for each round, 2 to 5: tick them off as you go.

2 3 4 5

☐ **End** Fasten off.

### Assembly

**1.** Shoulders: lay the front on the back with right sides together. Sew the 18 sts at each end of the top edge together, and leave the middle 22 sts of the back open for the neck.

**2.** Neckband: work it now, as written above.

**3.** Sleeves: place a marker on each side edge of the body 8 in (20.5 cm) below the shoulder seam (about 17 rows), front and back; this is half the top edge of the sleeve. With right sides together, put the middle of the top edge of a sleeve at each shoulder seam and sew the top edge to the body between the markers.

**4.** Sides and sleeves: sew each side seam from the marker down to the hem, and each sleeve seam from the underarm to the cuff edge.

## Finishing

- Weave in all the ends. Wash as the yarn label says and lay flat to the measurements to dry.

In all: 11 pieces; 7,886 stitches (464 in each hem rib, 2,436 in the back, 2,030 in the front, 141 in the front, first side of the neck, 141 in the front, second side of the neck, 160 in each cuff rib, 820 in each sleeve, 250 in the neckband); 20 ends to weave in.

Found a mistake in this pattern? Tell us at flossfield.com, under Make a request.


For your own crochet, gifts and handmade pieces you sell. Do not resell or share this PDF.