Color block baby bib

Small · US terms



Finished size
About 8¾ in (22 cm) wide and about 8 in (20.5 cm) at the height below the neck with

Skill
Easy
Basic stitches, simple shaping and an edging all round.

Yarn
Medium (4), 3 colors

Hook
5.5 mm (US I-9)

Gauge
13 stitches and 11 rows to 4 in (10 cm)
In half double crochet.

You will need

Yarn A: teal, the main color	**about 60 yd (55 m), an estimate**
Yarn B: mustard, the second color	**about 15 yd (14 m), an estimate**
Yarn C: cream, the third color	**about 15 yd (14 m), an estimate**

Hook: 5.5 mm (US I-9). Also: yarn needle, scissors, tape measure, 1 button, 5/8 in (15 mm) across and sewing thread and a sewing needle.

To find how many balls: divide by the length on your yarn's label and round up. The estimate is from the stitches of this size at this gauge.

Sizes

Size	Width with the edging	Height below the neck with	Neck opening when buttoned	Yarn, an estimate
Small (this file)	**8¾ in (22 cm)**	**8 in (20.5 cm)**	**12¼ in (31 cm)**	**about 90 yd (83 m)**
Large	10 in (25.5 cm)	9½ in (24 cm)	15½ in (39.5 cm)	about 125 yd (114 m)

For your own crochet, gifts and handmade pieces you sell. Do not resell or share this PDF.

Schematic

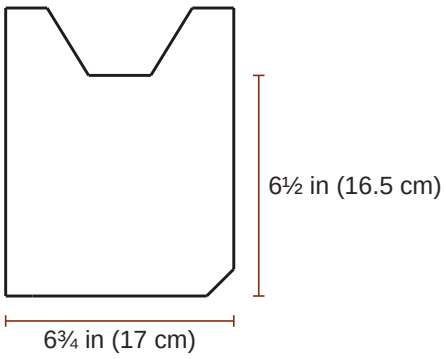

Bib

Abbreviations

Written in US terms. Where the UK name differs it is given beside the US one.

ch	chain
sl st	slip stitch (UK ss, slip stitch)
sc	single crochet (UK dc, double crochet)
hdc	half double crochet (UK htr, half treble)
dc	double crochet (UK tr, treble)
sp	space
st	stitch
rnd	round
RS	right side

Special stitches

sc2tog (single crochet 2 stitches together (UK double crochet 2 together)): Insert the hook in the next stitch and pull up a loop, insert the hook in the following stitch and pull up a loop (3 loops on the hook); yarn over and pull through all 3 loops. It leaves 1 sc2tog for the next row.

Gauge

13 stitches and 11 rows to 4 in (10 cm) in half double crochet.

> **The swatch.** A test piece to measure and pull out. It is not the start of the pattern. Ch 21; begin in the 2nd ch from the hook and work 16 rows of half double crochet on 20 sts, about 6¼ in (16 cm) wide and 5¾ in (14.5 cm) high, and measure 4 in (10 cm) in the middle. Use a larger hook if your swatch is small, a smaller one if it is large. Straps and edging: 13 sts and 15 rows to 4 in (10 cm) in single crochet (UK: double crochet).

Before you start

- Two sizes. This sheet is for the one size named at PATTERN below: its rows and its yarn amounts. Each other size is written out on a sheet of its own.
- The bib buttons at the side of the neck, over the short strap. No fit is promised beyond the measurements given. A bib is for mealtimes, with someone watching.

For your own crochet, gifts and handmade pieces you sell. Do not resell or share this PDF.

- The turning chain (ch 1 for single and half double crochet) never counts as a stitch. Work the first stitch of every row into the first stitch, at the base of the turning chain.
- The edging is worked in rounds that are not turned; the right side always faces you. The ch 1 at the start of a round does not count as a stitch. Work the first stitch of the round into the stitch at its base, where the round was joined.
- A decrease counts as one stitch.
- Row 1 is a right side row, and so is every odd row. With the right side up and the straps at the top, the short strap is on the right and the long strap on the left.
- Stitches worked evenly along the row ends of the straps: about 6 sc in every 7 rows.
- Color changes in rows: work the last yarn over of the last stitch of the row before with the new yarn. Cut the old yarn, leaving an end of about 6 in (15 cm), or, if it is needed again at the same edge within 6 rows and that edge is straight, carry it loosely up the edge.

Instructions

Chosen: Small. Square brackets [ ] hold a repeat: work what is inside as many times as it says. The count in round brackets at the end of a line is what that line leaves. Tick the box when a row is done. In UK terms sl st is slip stitch, sc is double crochet, hdc is half treble and dc is treble.

Bib

Yarns in order of use: A, teal; B, mustard; C, cream.

Colors: rows 1 to 6 yarn A; rows 7 to 12 yarn B; rows 13 to 18 yarn C.

☐ **Foundation**	With yarn A, ch 15.	
☐ **Row 1 (RS)**	Hdc in 2nd ch from hook and in each ch across	**(14 hdc)**
☐ **Row 2**	Ch 1, turn; 2 hdc in first st, hdc in each st across to last st, 2 hdc in last st	**(16 hdc)**
☐ **Row 3**	Ch 1, turn; 2 hdc in first st, hdc in each st across to last st, 2 hdc in last st	**(18 hdc)**
☐ **Row 4**	Ch 1, turn; 2 hdc in first st, hdc in each st across to last st, 2 hdc in last st	**(20 hdc)**
☐ **Row 5**	Ch 1, turn; 2 hdc in first st, hdc in each st across to last st, 2 hdc in last st	**(22 hdc)**
☐ **Row 6**	Ch 1, turn; hdc in each st across	**(22 hdc)**
☐ **Rows 7 to 12**	**Yarn B.** Ch 1, turn; hdc in each st across	**(22 hdc)**

A box for each row, 7 to 12: tick them off as you go.

☐ 7 ☐ 8 ☐ 9 ☐ 10 ☐ 11 ☐ 12

☐ **Rows 13 to 18**	**Yarn C.** Ch 1, turn; hdc in each st across	**(22 hdc)**

A box for each row, 13 to 18: tick them off as you go.

☐ 13 ☐ 14 ☐ 15 ☐ 16 ☐ 17 ☐ 18

☐ **End** Do not fasten off.

For your own crochet, gifts and handmade pieces you sell. Do not resell or share this PDF.

Neck strap, first side

Yarn C, cream.

☐ **Foundation**	Go on from row 18 of the bib. Both straps are in yarn A from end to end: change to it in the last yarn over of row 18, where the blocks stop.	
☐ **Row 19**	Ch 1, turn; sc in next 8 sts, leave the last 14 sts unworked	**(8 sc)**
☐ **Row 20**	Ch 1, turn; sc2tog, sc in each st across	**(7 sc)**
☐ **Row 21**	Ch 1, turn; sc in each st across to last 2 sts, sc2tog	**(6 sc)**
☐ **Row 22**	Ch 1, turn; sc2tog, sc in each st across	**(5 sc)**
☐ **Row 23**	Ch 1, turn; sc in each st across to last 2 sts, sc2tog	**(4 sc)**
☐ **Rows 24 to 26**	Ch 1, turn; sc in each st across	**(4 sc)**

A box for each row, 24 to 26: tick them off as you go.

24 25 26

☐ **End** Fasten off.

Neck strap, second side

Yarn A, teal.

☐ **Foundation**	Skip the next 6 unworked sts of row 18 for the neck and join yarn A in the next st, with the same side facing as for row 19 of the first side.	
☐ **Row 19**	Ch 1; sc in each st across	**(8 sc)**
☐ **Row 20**	Ch 1, turn; sc in each st across to last 2 sts, sc2tog	**(7 sc)**
☐ **Row 21**	Ch 1, turn; sc2tog, sc in each st across	**(6 sc)**
☐ **Row 22**	Ch 1, turn; sc in each st across to last 2 sts, sc2tog	**(5 sc)**
☐ **Row 23**	Ch 1, turn; sc2tog, sc in each st across	**(4 sc)**
☐ **Rows 24 to 53**	Ch 1, turn; sc in each st across	**(4 sc)**

A box for each row, 24 to 53: tick them off as you go.

24 25 26 27 28 29 30 31 32 33 34 35 36 37 38 39 40 41 42 43 44 45 46 47 48 49 50 51 52 53

☐ **Row 54**	Ch 1, turn; sc in next st, ch 2, skip next 2 sts, sc in next st	**(2 sc, 1 ch-2 sp)**
☐ **Row 55**	Ch 1, turn; sc in next st, 2 sc in next ch-2 sp, sc in next st	**(4 sc)**
☐ **Rows 56 to 57**	Ch 1, turn; sc in each st across	**(4 sc)**

A box for each row, 56 to 57: tick them off as you go.

56 57

☐ **End** Fasten off.

For your own crochet, gifts and handmade pieces you sell. Do not resell or share this PDF.

Edging

Yarn A, teal.

☐ **Foundation**	With the right side facing, join yarn A in the left-hand end of the foundation chain (left and right are those of the bib as it hangs, right side toward you and straps at the top).
☐ **Rnd 1**	Ch 1, sc in each of the 14 chs along the bottom, 21 sc evenly up the 18 row ends of the right-hand side, 7 sc evenly up the outer edge of the short strap, 6 sc evenly across its end (two in the first st and two in the last), 7 sc evenly down its inner edge, sc in each of the 6 skipped sts of the neck, 34 sc evenly up the inner edge of the long strap, 6 sc evenly across its end (two in the first st and two in the last), 34 sc evenly down its outer edge and 21 sc evenly down the 18 row ends of the left-hand side; join with sl st in first sc **(156 sc)**
☐ **Rnd 2**	Ch 1; 2 sc in next st, sc in next 12 sts, 2 sc in next st, sc in each st around; join with sl st in first sc **(158 sc)**
☐ **End**	Fasten off.

Scalloped edge

Yarn A, teal.

☐ **Foundation**	With the right side facing, count 20 sts back from the first sc of rnd 2 of the edging (the last st of the rnd is the first one counted; they lie up the left-hand side, and the last one counted lies just below the strap) and join yarn A in that st. Row 1 begins in that st and goes the same way as rnd 2; this edge goes round the two sides and the bottom only.
☐ **Row 1**	Ch 1; sc in next st, **[**skip next 2 sts, 5 dc in next st, skip next 2 sts, sc in next st**] 9 times**, sc in next st, leave the last 102 sts unworked **(11 sc, 45 dc)**
☐ **End**	Fasten off.

Putting it together

Lay the bib with the right side up. Sew a button, 5/8 in (15 mm) across, to the right side of the short strap, in the middle of its width and about 3/4 in (2 cm) from its end. Sew it on very firmly, with the sewing thread. The end of the long strap goes over it.

Finishing

- Weave in all the ends. Wash as the yarn label says and lay flat to the measurements to dry.

In all: 5 pieces; 952 stitches (376 in the bib, 42 in the neck strap, first side, 164 in the neck strap, second side, 314 in the edging, 56 in the scalloped edge); 12 ends to weave in.

Found a mistake in this pattern? Tell us at flossfield.com, under Make a request.

For your own crochet, gifts and handmade pieces you sell. Do not resell or share this PDF.