Textured cotton bib

Small · US terms



Finished size
About 7¾ in (19.5 cm) wide and about 6¾ in (17 cm) at the height below the neck with

Skill
Easy
Basic stitches, simple shaping and an edging all round.

Yarn
Medium (4), 2 colors

Hook
5.5 mm (US I-9)

Gauge
13 stitches and 10 rows to 4 in (10 cm)
In griddle stitch.

You will need

Yarn A: aqua, the main color **about 50 yd (46 m), an estimate**
Yarn B: ivory, the second color **about 25 yd (23 m), an estimate**
Hook: 5.5 mm (US I-9). Also: yarn needle, scissors, tape measure, 1 button, 5/8 in (15 mm) across and sewing thread and a sewing needle.

To find how many balls: divide by the length on your yarn's label and round up. The estimate is from the stitches of this size at this gauge.

Sizes

Size	Width with the edging	Height below the neck with	Neck opening when buttoned	Yarn, an estimate
Small (this file)	**7¾ in (19.5 cm)**	**6¾ in (17 cm)**	**12¼ in (31 cm)**	**about 75 yd (69 m)**
Large	9 in (23 cm)	8½ in (21.5 cm)	15½ in (39.5 cm)	about 100 yd (91 m)

For your own crochet, gifts and handmade pieces you sell. Do not resell or share this PDF.

Schematic

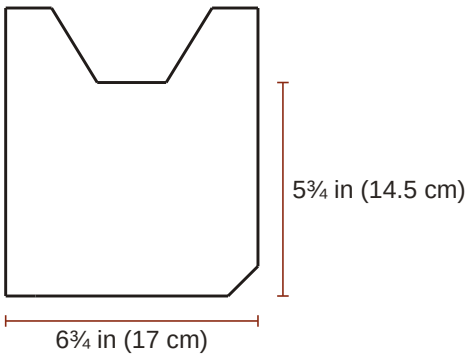

Bib

Abbreviations

Written in US terms. Where the UK name differs it is given beside the US one.

ch	chain
sl st	slip stitch (UK ss, slip stitch)
sc	single crochet (UK dc, double crochet)
dc	double crochet (UK tr, treble)
sp	space
st	stitch
rnd	round
RS	right side

Special stitches

sc2tog (single crochet 2 stitches together (UK double crochet 2 together)): Insert the hook in the next stitch and pull up a loop, insert the hook in the following stitch and pull up a loop (3 loops on the hook); yarn over and pull through all 3 loops. It leaves 1 sc2tog for the next row.

Gauge

13 stitches and 10 rows to 4 in (10 cm) in griddle stitch.

> **The swatch.** A test piece to measure and pull out. It is not the start of the pattern. Ch 21. Row 1 (RS): Sc in 2nd ch from hook and in each ch across. Rows 2 to 15: Ch 1, turn; [sc in next st, dc in next st] 10 times. The swatch of 15 rows is about 6¼ in (16 cm) wide and 5¾ in (14.5 cm) high. Measure 4 in (10 cm) in the middle. Use a larger hook if your swatch is small, a smaller one if it is large. Straps and edging: 13 sts and 15 rows to 4 in (10 cm) in single crochet (UK: double crochet).

Before you start

- Two sizes. This sheet is for the one size named at PATTERN below: its rows and its yarn amounts. Each other size is written out on a sheet of its own.
- The bib buttons at the side of the neck, over the short strap. No fit is promised beyond the measurements given. A bib is for mealtimes, with someone watching.

For your own crochet, gifts and handmade pieces you sell. Do not resell or share this PDF.

- The turning chain (ch 1 for single crochet) never counts as a stitch. Work the first stitch of every row into the first stitch, at the base of the turning chain.
- The edging is worked in rounds that are not turned; the right side always faces you. The ch 1 at the start of a round does not count as a stitch. Work the first stitch of the round into the stitch at its base, where the round was joined.
- A decrease counts as one stitch.
- Row 1 is a right side row, and so is every odd row. With the right side up and the straps at the top, the short strap is on the right and the long strap on the left.
- Stitches worked evenly along the row ends of the straps: about 6 sc in every 7 rows.

Instructions

Chosen: Small. Square brackets [ ] hold a repeat: work what is inside as many times as it says. The count in round brackets at the end of a line is what that line leaves. Tick the box when a row is done. In UK terms sl st is slip stitch, sc is double crochet and dc is treble.

Bib

Yarn A, aqua.

☐ **Foundation**	With yarn A, ch 15.	
☐ **Row 1 (RS)**	Sc in 2nd ch from hook and in each ch across	**(14 sc)**
☐ **Row 2**	Ch 1, turn; 2 sc in first st, sc in each st across to last st, 2 sc in last st	**(16 sc)**
☐ **Row 3**	Ch 1, turn; 2 sc in first st, sc in each st across to last st, 2 sc in last st	**(18 sc)**
☐ **Row 4**	Ch 1, turn; 2 sc in first st, sc in each st across to last st, 2 sc in last st	**(20 sc)**
☐ **Row 5**	Ch 1, turn; 2 sc in first st, sc in each st across to last st, 2 sc in last st	**(22 sc)**
☐ **Rows 6 to 16**	Ch 1, turn; **[**sc in next st, dc in next st**] 11 times**	**(11 sc, 11 dc)**

A box for each row, 6 to 16: tick them off as you go.

☐ 6 ☐ 7 ☐ 8 ☐ 9 ☐ 10 ☐ 11 ☐ 12 ☐ 13 ☐ 14 ☐ 15 ☐ 16

☐ **End**	Do not fasten off.	

Neck strap, first side

Yarn A, aqua.

☐ **Foundation**	Go on from row 16 of the bib. Both straps are in yarn A from end to end.	
☐ **Row 17**	Ch 1, turn; sc in next 8 sts, leave the last 14 sts unworked	**(8 sc)**
☐ **Row 18**	Ch 1, turn; sc2tog, sc in each st across	**(7 sc)**
☐ **Row 19**	Ch 1, turn; sc in each st across to last 2 sts, sc2tog	**(6 sc)**
☐ **Row 20**	Ch 1, turn; sc2tog, sc in each st across	**(5 sc)**
☐ **Row 21**	Ch 1, turn; sc in each st across to last 2 sts, sc2tog	**(4 sc)**

For your own crochet, gifts and handmade pieces you sell. Do not resell or share this PDF.

☐ **Rows 22 to 24**	Ch 1, turn; sc in each st across	**(4 sc)**

A box for each row, 22 to 24: tick them off as you go.

22 23 24

☐ **End**	Fasten off.	

Neck strap, second side

Yarn A, aqua.

☐ **Foundation**	Skip the next 6 unworked sts of row 16 for the neck and join yarn A in the next st, with the same side facing as for row 17 of the first side.	
☐ **Row 17**	Ch 1; sc in each st across	**(8 sc)**
☐ **Row 18**	Ch 1, turn; sc in each st across to last 2 sts, sc2tog	**(7 sc)**
☐ **Row 19**	Ch 1, turn; sc2tog, sc in each st across	**(6 sc)**
☐ **Row 20**	Ch 1, turn; sc in each st across to last 2 sts, sc2tog	**(5 sc)**
☐ **Row 21**	Ch 1, turn; sc2tog, sc in each st across	**(4 sc)**
☐ **Rows 22 to 51**	Ch 1, turn; sc in each st across	**(4 sc)**

A box for each row, 22 to 51: tick them off as you go.

22 23 24 25 26 27 28 29 30 31 32 33 34 35 36 37 38 39 40 41 42 43 44 45 46 47 48 49 50 51

☐ **Row 52**	Ch 1, turn; sc in next st, ch 2, skip next 2 sts, sc in next st	**(2 sc, 1 ch-2 sp)**
☐ **Row 53**	Ch 1, turn; sc in next st, 2 sc in next ch-2 sp, sc in next st	**(4 sc)**
☐ **Rows 54 to 55**	Ch 1, turn; sc in each st across	**(4 sc)**

A box for each row, 54 to 55: tick them off as you go.

54 55

☐ **End**	Fasten off.	

Edging

Yarn B, ivory.

☐ **Foundation**	With the right side facing, join yarn B in the left-hand end of the foundation chain (left and right are those of the bib as it hangs, right side toward you and straps at the top).	
☐ **Rnd 1**	Ch 1, sc in each of the 14 chs along the bottom, 19 sc evenly up the 16 row ends of the right-hand side, 7 sc evenly up the outer edge of the short strap, 6 sc evenly across its end (two in the first st and two in the last), 7 sc evenly down its inner edge, sc in each of the 6 skipped sts of the neck, 34 sc evenly up the inner edge of the long strap, 6 sc evenly across its end (two in the first st and two in the last), 34 sc evenly down its outer edge and 19 sc evenly down the 16 row ends of the left-hand side; join with sl st in first sc	**(152 sc)**

For your own crochet, gifts and handmade pieces you sell. Do not resell or share this PDF.

☐ **Rnd 2**	Ch 1; 2 sc in next st, sc in next 12 sts, 2 sc in next st, sc in each st around; join with sl st in first sc	**(154 sc)**
☐ **End**	Fasten off.	

Putting it together

Lay the bib with the right side up. Sew a button, 5/8 in (15 mm) across, to the right side of the short strap, in the middle of its width and about 3/4 in (2 cm) from its end. Sew it on very firmly, with the sewing thread. The end of the long strap goes over it.

Finishing

- Weave in all the ends. Wash as the yarn label says and lay flat to the measurements to dry.

In all: 4 pieces; 844 stitches (332 in the bib, 42 in the neck strap, first side, 164 in the neck strap, second side, 306 in the edging); 6 ends to weave in.

Found a mistake in this pattern? Tell us at flossfield.com, under Make a request.

For your own crochet, gifts and handmade pieces you sell. Do not resell or share this PDF.