Doll coat with a hood

Doll, 18 in (45.5 cm) · US terms



Finished size
About 13¼ in (33.5 cm) at the chest and about 7¼ in (18.5 cm) at the neck

Skill
Intermediate
Basic stitches, bobbles and one piece from the neck down

Yarn
Light (3), 2 colors

Hook
4.5 mm (US 7)

Gauge
16 stitches and 13½ rows to 4 in (10 cm)
In half double crochet.

You will need

Yarn A: red, main — **about 250 yd (229 m), an estimate**
Yarn B: white, contrast — **about 55 yd (50 m), an estimate**
Hook: 4.5 mm (US 7), or the size that gives you the gauge. Also: yarn needle, scissors, tape measure, 4 buttons, ½ in (12 mm) across and sewing thread and a sewing needle.

To find how many balls: divide by the length on your yarn's label and round up. Buy them from one dye lot. The estimate is from the stitches of this size at this gauge.

Sizes

Size	Chest (buttoned)	Neck around (buttoned)	Length from the neck to the hem	Sleeve from the underarm	Height of the hood	Around the hem (buttoned)	Yarn, an estimate
Doll, 13 in (33 cm)	10¼ in (26 cm)	5¾ in (14.5 cm)	6 in (15 cm)	3 in (7.5 cm)	3½ in (9 cm)	13½ in (34.5 cm)	about 180 yd (165 m)
Doll, 14 to 15 in (35.5 to 38 cm)	11¾ in (30 cm)	6¾ in (17 cm)	6½ in (16.5 cm)	3½ in (9 cm)	4¼ in (11 cm)	15½ in (39.5 cm)	about 230 yd (210 m)
Doll, 18 in (45.5 cm) (this file)	**13¼ in (33.5 cm)**	**7¼ in (18.5 cm)**	**7¾ in (19.5 cm)**	**4¾ in (12 cm)**	**5 in (12.5 cm)**	**17½ in (44.5 cm)**	**about 305 yd (279 m)**

For your own crochet, gifts and handmade pieces you sell. Do not resell or share this PDF or copies of it.

Schematic

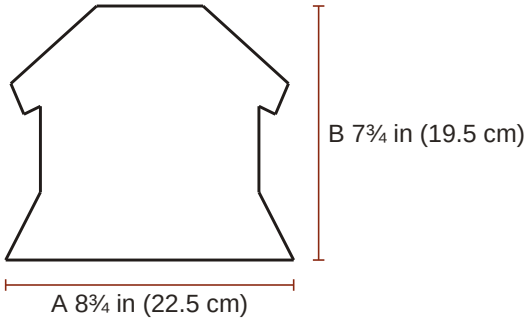

Coat, buttoned
A half the around the hem (buttoned)
B the length from the neck to the hem

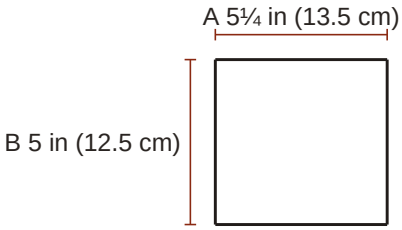

Hood, folded at the back
A the height of the hood
B the sleeve from the underarm

Abbreviations

Written in US terms. Where the UK name differs it is given beside the US one.

hdc	half double crochet (UK htr, half treble)
sc	single crochet (UK dc, double crochet)
sl st	slip stitch (UK ss, slip stitch)
ch	chain stitch
RS	right side
WS	wrong side
Rnd	round
st	stitch
sp	space

Special stitches

hdc2tog (half double crochet 2 stitches together (UK half treble 2 together)): [yarn over, insert the hook in the next stitch and pull up a loop] twice (5 loops on the hook); yarn over and pull through all 5 loops. It leaves 1 hdc2tog for the next row or round.

bob (bobble): [yarn over, insert the hook in the stitch named, yarn over and pull up a loop, yarn over and pull through 2 loops] 5 times in the same stitch (6 loops on the hook); yarn over and pull through all 6 loops. Worked on a wrong side row, it stands out on the right side. It leaves 1 bob for the next row or round.

Gauge

16 stitches and 13½ rows to 4 in (10 cm) in half double crochet.

> **The swatch.** A test piece to measure and pull out. It is not the start of the pattern. Ch 25; begin in the 2nd ch from the hook and work 20 rows of half double crochet on 24 sts, about 6 in (15 cm) wide and 6 in (15 cm) high, and measure 4 in (10 cm) in the middle. Use a larger hook if your swatch is small, a smaller one if it is large. Single crochet (UK: double crochet): about 18.5 rows to 4 in (10 cm); a row of bobbles is as tall as a row of single crochet.

For your own crochet, gifts and handmade pieces you sell. Do not resell or share this PDF or copies of it.

Before you start

- Doll sizes, by the height of the doll and its chest.
- No fit is promised beyond the measurements given. Choose a finished chest about 2 in (5 cm) wider than the doll, so that the coat goes on over a dress.
- The coat is worked from the neck down in one piece. Its yoke and body are worked back and forth in rows; row 1 is a right side row. The sleeves are worked in rounds with the right side facing. The hood is worked up from the neck in rows.
- The chain at the start of a row or round (ch 1 for single and half double crochet) never counts as a stitch. Work the first stitch into the stitch at its base.
- A ch-1 sp marks each of the four raglan lines. The ch-1 sps are counted apart from the stitches.
- At the underarms, work into each of the new chains as into a stitch on the next row. The sleeves are worked into the free side of these chains.
- A decrease counts as one stitch.
- To work into a chain space, put the hook under the whole chain.
- In the row after a row of bobbles, work 1 sc in the top of each bobble.
- Row 1 of each band is the row that is picked up along the edge. With the coat buttoned, the buttonhole band lies over the button band.
- The buttons are small parts: they are not for the doll of a child under three.
- Color changes in rows: work the last yarn over of the last stitch of the row before with the new yarn. Cut the old yarn, leaving an end of about 6 in (15 cm), or, if it is needed again at the same edge within 6 rows and that edge is straight, carry it loosely up the edge.
- Color changes in rounds: work the sl st that joins the round before with the new yarn. Cut the old yarn, leaving an end of about 6 in (15 cm), or, if it is needed again within 6 rnds, carry it loosely up the inside at the join.
- To fit a doll with a chest of 11½ in (29 cm) around.
- Around the hem (buttoned) 17½ in (44.5 cm). No fit is promised beyond the measurements given. Choose a finished chest about 2 in (5 cm) wider than the doll, so that the coat goes on over a dress.

For your own crochet, gifts and handmade pieces you sell. Do not resell or share this PDF or copies of it.

Instructions

Chosen: Doll, 18 in (45.5 cm). Square brackets [ ] hold a repeat: work what is inside as many times as it says. Round brackets ( ) inside a line hold stitches that all go into one place. The count in round brackets at the end of a line is what that line leaves. Tick the box when a row is done. In UK terms hdc is half treble, sc is double crochet and sl st is slip stitch.

Yoke

Yarn A, red.

☐ **Foundation**	With yarn A, ch 27.	
☐ **Row 1 (RS)**	Hdc in 2nd ch from hook and in each ch across	**(26 hdc)**
☐ **Row 2 (WS)**	Ch 1, turn; hdc in next 4 sts, ch 1, hdc in next 5 sts, ch 1, hdc in next 8 sts, ch 1, hdc in next 5 sts, ch 1, hdc in next 4 sts	**(26 hdc, 4 ch-1 sps)**
☐ **Rows 3 to 9**	Ch 1, turn; **[**hdc in each st to next ch-1 sp, (hdc, ch 1, hdc) in next ch-1 sp**] 4 times**, hdc in each st across	**(82 hdc; 4 ch-1 sps)**

A box for each row, 3 to 9: tick them off as you go.

☐ 3 ☐ 4 ☐ 5 ☐ 6 ☐ 7 ☐ 8 ☐ 9

☐ **Row 10**	Ch 1, turn; **[**hdc in each st to next ch-1 sp, ch 1, skip next ch-1 sp**] 4 times**, hdc in each st across	**(82 hdc, 4 ch-1 sps)**
☐ **End**	Do not fasten off.	

Body

Yarn A, red.

☐ **Foundation**	Go on from row 10 of the yoke. Colors: rows 11 to 24 yarn A; rows 25 to 27 yarn B.	
☐ **Row 11**	Ch 1, turn; hdc in each st to next ch-1 sp, ch 3 (underarm), skip next ch-1 sp, next 19 sts and next ch-1 sp (one sleeve), hdc in each st to next ch-1 sp, ch 3 (underarm), skip next ch-1 sp, next 19 sts and next ch-1 sp (one sleeve), hdc in each st across	**(44 hdc, 6 ch)**
☐ **Row 12**	Ch 1, turn; hdc in each st across	**(50 hdc)**
☐ **Row 13**	Ch 1, turn; hdc in next 4 sts, **[**2 hdc in next st, hdc in next 7 sts**] 4 times**, 2 hdc in next st, hdc in next 8 sts, 2 hdc in next st, hdc in next 4 sts	**(56 hdc)**
☐ **Rows 14 to 17**	Ch 1, turn; hdc in each st across	**(56 hdc)**

A box for each row, 14 to 17: tick them off as you go.

☐ 14 ☐ 15 ☐ 16 ☐ 17

☐ **Row 18**	Ch 1, turn; hdc in next 4 sts, **[**2 hdc in next st, hdc in next 8 sts**] 4 times**, 2 hdc in next st, hdc in next 9 sts, 2 hdc in next st, hdc in next 5 sts	**(62 hdc)**
☐ **Rows 19 to 21**	Ch 1, turn; hdc in each st across	**(62 hdc)**

A box for each row, 19 to 21: tick them off as you go.

☐ 19 ☐ 20 ☐ 21

☐ **Row 22**	Ch 1, turn; hdc in next 6 sts, **[**2 hdc in next st, hdc in next 11 sts**] 3 times**, 2 hdc in next st, hdc in next 12 sts, 2 hdc in next st, hdc in next 6 sts	**(67 hdc)**

For your own crochet, gifts and handmade pieces you sell. Do not resell or share this PDF or copies of it.

☐ **Rows 23 to 24**	Ch 1, turn; hdc in each st across	**(67 hdc)**

A box for each row, 23 to 24: tick them off as you go.

23 24

☐ **Row 25**	Ch 1, turn; sc in each st across	**(67 sc)**
☐ **Row 26**	Ch 1, turn; sc in next 3 sts, **[**bob in next st, sc in next 2 sts**] 20 times**, bob in next st, sc in next 3 sts	**(46 sc, 21 bob)**
☐ **Row 27**	Ch 1, turn; sc in each st across	**(67 sc)**
☐ **End**	Fasten off.	

Sleeve: make 2

Yarn A, red.

☐ **Foundation**	Colors: rnds 1 to 14 yarn A; rnds 15 to 17 yarn B. With the right side facing and the hem downward, join yarn A in the middle one of the 3 underarm chs, on their free side; ch 1, hdc in that ch and in the underarm ch to its left, hdc in the ch-1 sp, hdc in each of the 19 sleeve sts, hdc in the next ch-1 sp and hdc in the underarm ch left (24 hdc); join with sl st in first hdc. This is rnd 1.	
☐ **Rnds 2 to 3**	Ch 1; hdc in each st around; join with sl st in first hdc	**(24 hdc)**

A box for each round, 2 to 3: tick them off as you go.

2 3

☐ **Rnd 4**	Ch 1; hdc2tog, hdc in each st around to last 2 sts, hdc2tog; join with sl st in first hdc2tog	**(22 hdc)**
☐ **Rnds 5 to 10**	Repeat Rnds 2 to 4, 2 more times (20, 18 hdc at the ends of the repeats)	**(18 hdc)**

A box for each round, 5 to 10: tick them off as you go.

5 6 7 8 9 10

☐ **Rnds 11 to 14**	Ch 1; hdc in each st around; join with sl st in first hdc	**(18 hdc)**

A box for each round, 11 to 14: tick them off as you go.

11 12 13 14

☐ **Rnds 15 to 17**	Ch 1; sc in each st around; join with sl st in first sc	**(18 sc)**

A box for each round, 15 to 17: tick them off as you go.

15 16 17

☐ **End**	Fasten off.	

For your own crochet, gifts and handmade pieces you sell. Do not resell or share this PDF or copies of it.

Button band

Yarn B, white.

☐ **Foundation**	With the right side facing, join yarn B at the neck end of the left front edge (as worn). Ch 1; going down to the hem, along the yoke and the body, [sc in the end of each of the next 4 rows, 2 sc in the end of the next row] 4 times, sc in the end of each of the next 4 rows (28 sc), then sc in the end of each of the last 3 rows of the body (31 sc in all). This is row 1.	
☐ **Rows 2 to 4**	Ch 1, turn; sc in each st across	**(31 sc)**

A box for each row, 2 to 4: tick them off as you go.

2 3 4

☐ **End**	Fasten off.	

Buttonhole band

Yarn B, white.

☐ **Foundation**	With the right side facing, join yarn B at the hem of the right front edge (as worn). Ch 1; going up to the neck, sc in the end of each of the last 3 rows of the body, then along the rest of the body and the yoke, [sc in the end of each of the next 4 rows, 2 sc in the end of the next row] 4 times, sc in the end of each of the next 4 rows (28 sc) (31 sc in all). This is row 1.	
☐ **Row 2**	Ch 1, turn; sc in next 2 sts, **[**ch 2, skip next 2 sts, sc in next 6 sts**] 3 times**, ch 2, skip next 2 sts, sc in next 3 sts	**(23 sc, 4 ch-2 sps)**
☐ **Row 3**	Ch 1, turn; sc in next 3 sts, **[**2 sc in next ch-2 sp, sc in next 6 sts**] 3 times**, 2 sc in next ch-2 sp, sc in next 2 sts	**(31 sc)**
☐ **Row 4**	Ch 1, turn; sc in each st across	**(31 sc)**
☐ **End**	Fasten off.	

Hood

Yarn A, red.

☐ **Foundation**	With the right side facing and the foundation chain uppermost, join yarn A in the last of the 26 chs that row 1 of the yoke is worked in, at the right front edge (as worn); ch 1, hdc in the free side of each of these 26 chs to the left front edge (26 hdc); the ch skipped at the start of row 1 is left out. This is row 1.	
☐ **Row 2**	Ch 1, turn; **[**2 hdc in next st**] 6 times**, **[**hdc in next st, 2 hdc in next st**] 10 times**	**(42 hdc)**
☐ **Rows 3 to 17**	Ch 1, turn; hdc in each st across	**(42 hdc)**

A box for each row, 3 to 17: tick them off as you go.

3 4 5 6 7 8 9 10 11 12 13 14 15 16 17

☐ **End**	Fasten off, leaving an end of about 16 in (40 cm) for sewing. Fold the last row in half with the right side inside, so that st 1 lies on st 42, and sew the two halves together, 21 sts to 21 sts. This seam is the top of the hood.	

For your own crochet, gifts and handmade pieces you sell. Do not resell or share this PDF or copies of it.

Hood edging

Yarn B, white.

☐ **Foundation**	With the right side facing, join yarn B at the neck end of the right edge of the hood (as worn), in the end of row 1. Ch 1; up this edge to the seam, [sc in the end of each of the next 4 rows, 2 sc in the end of the next row] 3 times, sc in the end of each of the next 2 rows (20 sc); sc in the seam; down the left edge to the neck, [sc in the end of each of the next 4 rows, 2 sc in the end of the next row] 3 times, sc in the end of each of the next 2 rows (20 sc) (41 sc in all). This is row 1.	
☐ **Row 2**	Ch 1, turn; sc in next 2 sts, **[**bob in next st, sc in next 2 sts**] 12 times**, bob in next st, sc in next 2 sts	**(28 sc, 13 bob)**
☐ **Row 3**	Ch 1, turn; sc in each st across	**(41 sc)**
☐ **End**	Fasten off.	

Pocket: make 2

Yarn A, red.

☐ **Foundation**	With yarn A, ch 8. Colors: rows 1 to 5 yarn A; row 6 yarn B.	
☐ **Row 1 (RS)**	Hdc in 2nd ch from hook and in each ch across	**(7 hdc)**
☐ **Rows 2 to 5**	Ch 1, turn; hdc in each st across	**(7 hdc)**

A box for each row, 2 to 5: tick them off as you go.

☐ 2 ☐ 3 ☐ 4 ☐ 5

☐ **Row 6**	Ch 1, turn; sc in each st across	**(7 sc)**
☐ **End**	Fasten off.	

Assembly

1. Close any small gaps at the underarms with the yarn ends there. Sew the 4 buttons to the button band with the sewing thread, each against a buttonhole of the buttonhole band.

2. Push the bobbles of the hem and of the hood edging out to the right side.

3. Pockets: sew one pocket to each front, its white edge toward the neck, with its lower edge along row 23 of the body and its two sides upright. Row 23 has 67 sts; on each front the pocket lies over sts 6 to 12 of that row, counted from the band. Sew the sides and the lower edge with a piece of yarn A about 12 in (30 cm) long; the white edge stays open at the top.

Finishing

- Weave in all the ends. Wash as the yarn label says and lay flat to the measurements to dry.

Found a mistake in this pattern? Tell us at flossfield.com, under Make a request.

For your own crochet, gifts and handmade pieces you sell. Do not resell or share this PDF or copies of it.