Earth tone granny square top

Size M · US terms



Finished size
About 42 in (106.5 cm) at the bust and about 22 in (56 cm) long
To fit a bust of 37 in (94 cm)

Skill
Easy
Basic stitches, and squares joined with a whip stitch.

Yarn
Medium (4), 4 colors

Hook
5.5 mm (US I-9)

Gauge
13 stitches and 7 rounds to 4 in (10 cm)
In double crochet.

You will need

Yarn A: cream, the main color	**about 70 yd (64 m), an estimate**
Yarn B: ochre, the second color	**about 100 yd (91 m), an estimate**
Yarn C: brick, the third color	**about 145 yd (133 m), an estimate**
Yarn D: brown, the fourth color	**about 425 yd (389 m), an estimate**

Hook: 5.5 mm (US I-9). Also: yarn needle, scissors, tape measure and stitch markers.

To find how many balls: divide by the length on your yarn's label and round up. The estimate is from the stitches of this size at this gauge.

Sizes

Size	To fit bust	Bust	Length	Armhole depth	Yarn, an estimate
XS	29 in (73.5 cm)	32 in (81.5 cm)	21 in (53.5 cm)	7 in (18 cm)	about 620 yd (567 m)
Size S	33 in (84 cm)	37 in (94 cm)	19½ in (49.5 cm)	7½ in (19 cm)	about 640 yd (585 m)
Size M (this file)	**37 in (94 cm)**	**42 in (106.5 cm)**	**22 in (56 cm)**	**8 in (20.5 cm)**	**about 740 yd (677 m)**
Size L	41 in (104 cm)	46 in (117 cm)	24 in (61 cm)	8½ in (21.5 cm)	about 915 yd (837 m)
1X	45 in (114.5 cm)	47 in (119.5 cm)	24½ in (62 cm)	9 in (23 cm)	about 840 yd (768 m)
2X	49 in (124.5 cm)	51 in (129.5 cm)	26½ in (67.5 cm)	9½ in (24 cm)	about 1,040 yd (951 m)
3X	53 in (134.5 cm)	56 in (142 cm)	22 in (56 cm)	10 in (25.5 cm)	about 880 yd (805 m)
4X	57 in (145 cm)	60 in (152.5 cm)	23½ in (59.5 cm)	10½ in (26.5 cm)	about 1,030 yd (943 m)
5X	61 in (155 cm)	64 in (162.5 cm)	25 in (63.5 cm)	11 in (28 cm)	about 1,205 yd (1,103 m)

For your own crochet, gifts and handmade pieces you sell. Do not resell or share this PDF.

Schematic

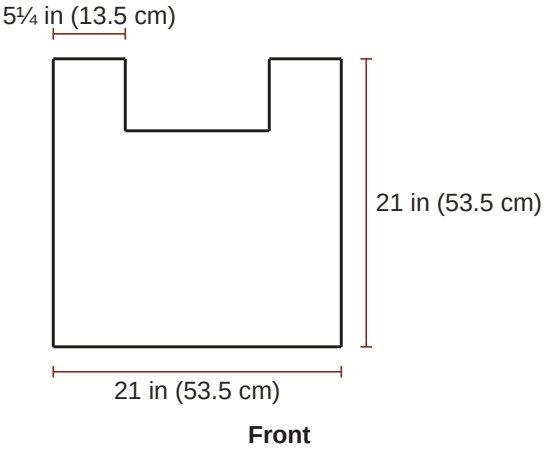

Front

Abbreviations

Written in US terms. Where the UK name differs it is given beside the US one.

ch	chain
sl st	slip stitch (UK ss, slip stitch)
sc	single crochet (UK dc, double crochet)
dc	double crochet (UK tr, treble)
sp	space
st	stitch
rnd	round

Special stitches

sc2tog (single crochet 2 stitches together (UK double crochet 2 together)): Insert the hook in the next stitch and pull up a loop, insert the hook in the following stitch and pull up a loop (3 loops on the hook); yarn over and pull through all 3 loops. It leaves 1 sc2tog for the next row.

Gauge

13 stitches and 7 rounds to 4 in (10 cm) in double crochet.

> **The swatch.** A test piece to measure and pull out. It is not the start of the pattern. Ch 22; begin in the 3rd ch from the hook and work 10 rows of double crochet on 20 sts, about 6¼ in (16 cm) wide and 5¾ in (14.5 cm) high, and measure 4 in (10 cm) in the middle. Use a larger hook if your swatch is small, a smaller one if it is large. A square measures what the size list says after its last round. Measure the first one before you go on; change the hook if it is larger or smaller.

Before you start

- Women's sizes.
- The finished bust is from 2 in (5 cm) to 5 in (12.5 cm) wider than the body measurement, by the size. Choose by the finished measurement you like; no fit is promised beyond the measurements given.
- The rounds are not turned; the right side always faces you.
- The chain at the start of a round (ch 1 for single crochet, ch 2 for double crochet) never counts as a stitch. From rnd 2 the rounds of 3 dc groups begin in a corner space: the first 3 dc go in the same space as the ch 2. In a round of single crochet the first stitch goes in the stitch at the base of the ch 1.

For your own crochet, gifts and handmade pieces you sell. Do not resell or share this PDF.

- A decrease counts as one stitch.
- The length goes by whole squares, so it does not grow evenly from size to size. For a longer top, add a row of squares to the back and to the front (more yarn is needed).
- Whip stitch: hold the two edges together, put the needle through both from back to front, bring the yarn over the edges and go in again from the back, one stitch along.

Instructions

Chosen: Size M. Square brackets [ ] hold a repeat: work what is inside as many times as it says. Round brackets ( ) inside a line hold stitches that all go into one place. The count in round brackets at the end of a line is what that line leaves. Tick the box when a round is done. In UK terms sl st is slip stitch, sc is double crochet and dc is treble.

Square: make 30

Yarns in order of use: A, cream; B, ochre; C, brick; D, brown.

Colors: rnd 1 yarn A; rnd 2 yarn B; rnd 3 yarn C; rnds 4 and 5 yarn D.

Each new color is joined as its round says.

☐ **Foundation**	With yarn A, ch 4; join with sl st in first ch to form a ring.
☐ **Rnd 1**	Ch 2; (3 dc, ch 2, 3 dc, ch 2, 3 dc, ch 2, 3 dc, ch 2) in ring; join with sl st in first dc **(12 dc, 4 ch-2 sps)**
☐ **Rnd 2**	Fasten off yarn A; join yarn B with a sl st in any ch-2 sp, ch 2; (3 dc, ch 2, 3 dc) in same sp, ch 1, **[**(3 dc, ch 2, 3 dc) in next ch-2 sp, ch 1**] 3 times**; join with sl st in first dc **(24 dc, 4 ch-2 sps, 4 ch-1 sps)**
☐ **Rnd 3**	Fasten off yarn B; join yarn C with a sl st in any ch-2 sp, ch 2; (3 dc, ch 2, 3 dc) in same sp, ch 1, 3 dc in next ch-1 sp, ch 1, **[**(3 dc, ch 2, 3 dc) in next ch-2 sp, ch 1, 3 dc in next ch-1 sp, ch 1**] 3 times**; join with sl st in first dc **(36 dc, 4 ch-2 sps, 8 ch-1 sps)**
☐ **Rnd 4**	Fasten off yarn C; join yarn D with a sl st in any ch-2 sp, ch 2; (3 dc, ch 2, 3 dc) in same sp, ch 1, [3 dc in next ch-1 sp, ch 1] twice, **[**(3 dc, ch 2, 3 dc) in next ch-2 sp, ch 1, [3 dc in next ch-1 sp, ch 1] twice**] 3 times**; join with sl st in first dc **(48 dc, 4 ch-2 sps, 12 ch-1 sps)**
☐ **Rnd 5**	Ch 1; **[**sc in next 3 sts, (sc, ch 2, sc) in next ch-2 sp, sc in next 3 sts, sc in next ch-1 sp, [sc in next 3 sts, sc in next ch-1 sp] twice**] 4 times**; join with sl st in first sc **(68 sc, 4 ch-2 sps)**
☐ **End**	Fasten off.

Lower band

Yarn D, brown.

Work this at step 5 under Assembly.

☐ **Foundation**	With the right side facing, join yarn D at a side seam.
☐ **Rnd 1**	Ch 1, 136 sc evenly along the lower edge (17 sc along each square); join with sl st in first sc **(136 sc)**
☐ **Rnds 2 to 4**	Ch 1; sc in each st around; join with sl st in first sc **(136 sc)**

A box for each round, 2 to 4: tick them off as you go.

2 3 4

☐ **End**	Fasten off.

For your own crochet, gifts and handmade pieces you sell. Do not resell or share this PDF.

Armhole band: make 2

Yarn D, brown.

Work this at step 5 under Assembly.

☐ **Foundation**	With the right side facing, join yarn D at the underarm.	
☐ **Rnd 1**	Ch 1, 52 sc evenly around the armhole, half of them on each side of the shoulder seam; join with sl st in first sc	**(52 sc)**
☐ **Rnds 2 to 3**	Ch 1; sc in each st around; join with sl st in first sc	**(52 sc)**

A box for each round, 2 to 3: tick them off as you go.

2 3

☐ **End**	Fasten off.	

Neckband

Yarn D, brown.

Work this at step 5 under Assembly.

The decreases turn the four corners of the neck, so that the band lies flat.

☐ **Foundation**	With the right side facing, join yarn D at the right shoulder seam (as worn).	
☐ **Rnd 1**	Ch 1, 102 sc evenly around the neck, across the back first (17 sc along each square); join with sl st in first sc	**(102 sc)**
☐ **Rnd 2**	Ch 1; sc2tog, sc in next 30 sts, sc2tog twice, sc in next 13 sts, sc2tog twice, sc in next 30 sts, sc2tog twice, sc in next 13 sts, sc2tog; join with sl st in first sc2tog	**(94 sc)**
☐ **Rnd 3**	Ch 1; sc2tog, sc in next 28 sts, sc2tog twice, sc in next 11 sts, sc2tog twice, sc in next 28 sts, sc2tog twice, sc in next 11 sts, sc2tog; join with sl st in first sc2tog	**(86 sc)**
☐ **End**	Fasten off.	

Assembly

1. Lay out the back: 4 squares across and 4 squares high (16 squares). Lay out the front the same way, but with only the first and the last square in the top row (14 squares); the gap is the neck.

2. Join the squares of each piece: hold two squares with right sides together and, with yarn D, whip stitch through both loops from corner to corner. Join the squares into rows, then the rows to each other.

3. Shoulders: lay the front on the back with right sides together and, with yarn D, whip stitch the top edge of each shoulder square of the front to the square behind it.

4. Sides: place a marker on each side edge 8 in (20.5 cm) below the shoulder seam, front and back. With right sides together and yarn D, whip stitch the side edges together from the lower edge up to the markers; the edges above the markers stay open for the arms.

5. Bands: work the lower band, the armhole bands and the neckband, as written above.

Finishing

- Weave in all the ends. Wash as the yarn label says and lay flat to the measurements to dry.

In all: 34 pieces; 6,778 stitches (188 in each square, 544 in the lower band, 156 in each armhole band, 282 in the neckband); 248 ends to weave in.

Found a mistake in this pattern? Tell us at flossfield.com, under Make a request.

For your own crochet, gifts and handmade pieces you sell. Do not resell or share this PDF.