Easy Tunisian sweater

M, to fit bust 37 in (94 cm) · US terms



Finished size

About 42¾ in (108.5 cm) at the bust and about 23 in (58.5 cm) long

To fit a bust of 37 in (94 cm)

Skill

Easy

Tunisian simple and knit stitch, easy shaping and seams; ribs with a plain hook

Yarn

Medium (4), 2 colors

Hook

6.5 mm (US K-10½)

Gauge

14 stitches and 12 rows to 4 in (10 cm)

In Tunisian simple stitch, with the 6.

What you need

Yarn A: slate blue, main color **about 975 yd (892 m), an estimate**

Yarn B: cream, contrast **about 425 yd (389 m), an estimate**

By weight: about 700 g in all, an estimate, where 100 g is 200 yd (183 m).

Hook: 6.5 mm (US K-10½), or the size that gives you the gauge. Also: yarn needle, scissors, tape measure, a plain 5.5 mm crochet hook for the ribs and the neckband and stitch markers.

To find how many balls: divide by the length on your yarn's label and round up. Buy them from one dye lot. The estimate is from the stitches of this size at this gauge.

Sizes

Size	To fit bust	Yarn, an estimate	Bust	Length	Depth of the cream yoke	Armhole depth	Sleeve, with the cuff	Upper sleeve	Cuff around	Back neck	Neck
XS	29 in (73.5 cm)	about 1,175 yd (1,074 m)	34¾ in (88.5 cm)	22½ in (57 cm)	7¾ in (19.5 cm)	6¾ in (17 cm)	17 in (43 cm)	13¾ in (35 cm)	8 in (20.5 cm)	8¼ in (21 cm)	20¼ in (51.5 cm)
S	33 in (84 cm)	about 1,275 yd (1,166 m)	38¾ in (98.5 cm)	22¾ in (58 cm)	8¼ in (21 cm)	7½ in (19 cm)	16½ in (42 cm)	14¾ in (37.5 cm)	8 in (20.5 cm)	8½ in (21.5 cm)	21 in (53.5 cm)
M (this file)	**37 in (94 cm)**	**about 1,400 yd (1,280 m)**	**42¾ in (108.5 cm)**	**23 in (58.5 cm)**	**8¾ in (22 cm)**	**8 in (20.5 cm)**	**16¼ in (41.5 cm)**	**16 in (40.5 cm)**	**8 in (20.5 cm)**	**8¼ in (21 cm)**	**20¼ in (51.5 cm)**
L	41 in (104 cm)	about 1,500 yd (1,372 m)	46¾ in (118.5 cm)	23¼ in (59 cm)	9½ in (24 cm)	8½ in (21.5 cm)	16½ in (42 cm)	17¼ in (44 cm)	8½ in (21.5 cm)	8½ in (21.5 cm)	21 in (53.5 cm)

For your own crochet, gifts and handmade pieces you sell. Do not resell or share this PDF or copies of it.

1X	45 in (114.5 cm)	about 1,650 yd (1,509 m)	50¾ in (129 cm)	23½ in (59.5 cm)	10 in (25.5 cm)	9¼ in (23.5 cm)	16 in (40.5 cm)	18¼ in (46.5 cm)	9¼ in (23.5 cm)	8¼ in (21 cm)	20¼ in (51.5 cm)
2X	49 in (124.5 cm)	about 1,775 yd (1,623 m)	54¾ in (139 cm)	23¾ in (60.5 cm)	10¼ in (26 cm)	9½ in (24 cm)	16 in (40.5 cm)	18¾ in (47.5 cm)	9¼ in (23.5 cm)	9¼ in (23.5 cm)	22¼ in (56.5 cm)
3X	53 in (134.5 cm)	about 1,900 yd (1,737 m)	58¾ in (149 cm)	24 in (61 cm)	10¾ in (27.5 cm)	10 in (25.5 cm)	15¼ in (38.5 cm)	20 in (51 cm)	9¾ in (25 cm)	8¾ in (22 cm)	21½ in (54.5 cm)
4X	57 in (145 cm)	about 2,000 yd (1,829 m)	62¾ in (159.5 cm)	24¼ in (61.5 cm)	11½ in (29 cm)	10½ in (26.5 cm)	15¼ in (38.5 cm)	21¼ in (54 cm)	9¾ in (25 cm)	9¼ in (23.5 cm)	22¼ in (56.5 cm)
5X	61 in (155 cm)	about 2,100 yd (1,920 m)	66¾ in (169.5 cm)	24½ in (62 cm)	11¾ in (30 cm)	10¾ in (27.5 cm)	14¼ in (36 cm)	21¾ in (55 cm)	10¼ in (26 cm)	8¾ in (22 cm)	21½ in (54.5 cm)

Schematic

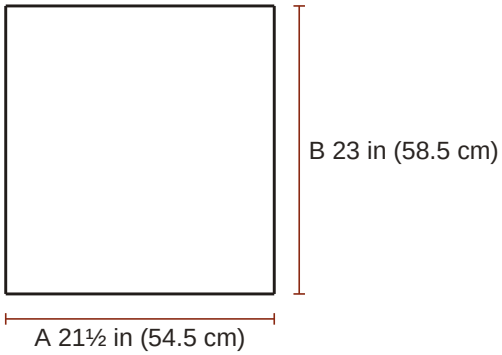

Back
A half the bust
B the length

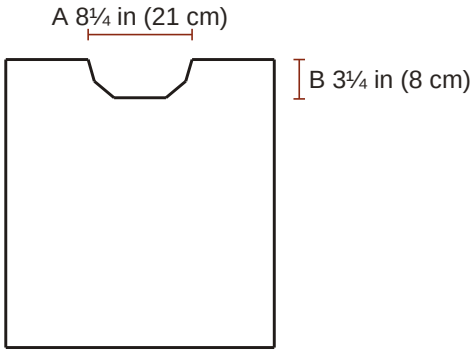

Front
A the neck
B how deep the neck is

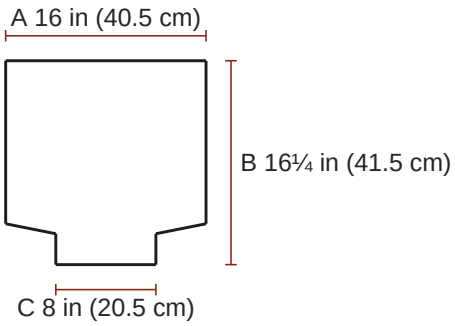

Sleeve (make 2)
A the top of the sleeve, opened flat
B the sleeve
C half the cuff

For your own crochet, gifts and handmade pieces you sell. Do not resell or share this PDF or copies of it.

Gauge

14 stitches and 12 rows to 4 in (10 cm) in Tunisian simple stitch, with the 6.

> **The swatch.** A test piece to measure and pull out. It is not the start of the pattern. With the Tunisian hook ch 20. Row 1: pull up a loop in the 2nd ch from the hook and in each ch across, return (20 tss). Rows 2 to 18: tss in each st across, return (20 tss each row). The swatch is about 5¾ in (14.5 cm) wide and 6 in (15 cm) high. Measure 4 in (10 cm) in the middle. Use a larger hook if your swatch is small, a smaller one if it is large. Tunisian knit stitch: 14 sts and 14 rows to 4 in (10 cm), with the same hook. Ribs and neckband, with the plain 5.5 mm hook: the ribs worked sideways have 14 rows and 13 sts to 4 in (10 cm), so a rib of 8 sts is about 2½ in (6.5 cm) deep; single crochet has 13 sts to 4 in (10 cm).

Notes

- The finished bust is 5¾ in (14.5 cm) wider than the body measurement at each size. Choose by the finished measurement you like; no fit is promised beyond the measurements given.
- Hooks: the 6.5 mm hook is a Tunisian hook, best one with a cable, that holds all the sts of a row. The plain hook, 5.5 mm (US I-9), is for the ribs and the neckband.
- A row of Tunisian crochet is a forward pass and a return pass. The right side always faces you: do not turn.
- Forward pass: the loop on the hook counts as the first st, so skip the first vertical bar; "in each st" means in each st after it. Pull up one loop in each st and keep all the loops on the hook. The last st of a full row lies at the edge: insert the hook under both of its strands. In a row that leaves sts unworked the last st is worked like the others.
- Return (the return pass): yarn over and pull through 1 loop, then [yarn over, pull through 2 loops] until 1 loop is left on the hook. That loop is the first st of the next row.
- A row of tks2tog at the beginning: the loop on the hook stays as the first st, and the tks2tog joins the 2nd and 3rd sts. A row that begins with m1: the m1 lies between the first st and the second.
- Bind off: insert the hook in the next st as for the st of that row, yarn over and pull through the st and through the loop on the hook; do this in each st after the first, which is the loop on the hook. The sts that are left for the front neck are not bound off: the return pass has closed them.
- Color changes in Tunisian rows: work the last yarn over of the return pass, the one that leaves 1 loop on the hook, with the new yarn. Cut the old yarn, leaving an end of about 6 in (15 cm).
- The turning chain (ch 1 for single crochet, ch 2 for double crochet) never counts as a stitch. Work the first stitch of every row into the first stitch, at the base of the turning chain.
- The chain at the start of a round never counts as a stitch. Work the first stitch of the round into the stitch at its base, where the round was joined.
- The right side of a rib is its row 1 side: odd-numbered rib rows are right side rows.
- The ribs are worked sideways in single crochet in the back loop (UK: double crochet). The panels and the sleeves are worked up from a long edge of a rib.
- Sew every seam with the yarn needle and yarn A: cut a length about three times as long as the seam.
- In back loop only: insert the hook under the loop of the stitch that is farther from you, and leave the nearer loop free.

For your own crochet, gifts and handmade pieces you sell. Do not resell or share this PDF or copies of it.

Instructions

M, to fit bust 37 in (94 cm). US terms.

ch chain, **sl st** slip stitch, **sc** single crochet (UK double crochet), **dc** double crochet (UK treble), **Rnd** round, **st** stitch.
RS right side, the one that shows.
[ ] 33 times: work what is inside 33 times in all.
(8 sc): the stitches you have when the row is done. **How to read a pattern**.

Special stitches

fpdc (front post double crochet (UK front post treble)): Yarn over, insert the hook from the front to the back and to the front again around the post of the stitch named, pull up a loop, [yarn over and pull through 2 loops] twice. The front is the side that faces you. A post stitch takes the place of the stitch it is worked around: do not work into the top of that stitch as well.

bpdc (back post double crochet (UK back post treble)): As fpdc, but insert the hook from the back to the front and to the back again around the post.

tss (Tunisian simple stitch (UK the same)): With the yarn behind the work, insert the hook from right to left under the next front vertical bar, yarn over and pull up a loop; leave the loop on the hook.

tks (Tunisian knit stitch (UK the same)): With the yarn behind the work, insert the hook from front to back through the next stitch, between its front and its back vertical bar, yarn over and pull up a loop; leave the loop on the hook.

tks2tog (Tunisian knit 2 stitches together (UK the same)): Insert the hook through the next two stitches together, each as for tks, yarn over and pull up one loop.

m1 (make 1 stitch): Insert the hook into the space between the st just worked and the next vertical bar, under all the strands, yarn over and pull up a loop; leave the loop on the hook. It is one new st.

Hem rib: make 2, one for the back and one for the front

Yarn A, slate blue.

☐ **Foundation**	With yarn A, ch 9.	
☐ **Row 1 (RS)**	Sc in 2nd ch from hook and in each ch across	(8 sc)
☐ **Rows 2 to 75**	Ch 1, turn; sc in back loop only of each st across	(8 sc)

2 3 4 5 6 7 8 9 10 11 12 13 14 15 16 17 18 19 20 21 22 23 24 25 26 27 28 29
30 31 32 33 34 35 36 37 38 39 40 41 42 43 44 45 46 47 48 49 50 51 52 53 54 55 56 57
58 59 60 61 62 63 64 65 66 67 68 69 70 71 72 73 74 75

☐ **End**	Fasten off.	

Back

Yarn A, slate blue.

☐ **Foundation**	Colors: rows 1 to 35 yarn A; rows 36 to 66 yarn B. Hold a hem rib with one long edge at the top and its right side facing. With the Tunisian hook and yarn A, beginning at the right-hand end of that edge, pull up a loop in the end of each rib row across (75 loops on the hook), return (75 tss). This is row 1.	
☐ **Rows 2 to 35**	Tss in each st across, return	(75 tss)

2 3 4 5 6 7 8 9 10 11 12 13 14 15 16 17 18 19 20 21 22 23 24 25 26 27 28 29
30 31 32 33 34 35

For your own crochet, gifts and handmade pieces you sell. Do not resell or share this PDF or copies of it.

☐ **Rows 36 to 66** Tks in each st across, return (75 tk)

36 37 38 39 40 41 42 43 44 45 46 47 48 49 50 51 52 53 54 55 56 57 58 59 60 61 62 63 64 65 66

☐ **End** Bind off all 75 sts (see NOTES). The back measures about 21½ in (54.5 cm) wide and 23 in (58.5 cm) long, with the rib. Fasten off.

Front

Yarn A, slate blue.

☐ **Foundation** Colors: rows 1 to 35 yarn A; rows 36 to 55 yarn B. Hold a hem rib with one long edge at the top and its right side facing. With the Tunisian hook and yarn A, beginning at the right-hand end of that edge, pull up a loop in the end of each rib row across (75 loops on the hook), return (75 tss). This is row 1.

☐ **Rows 2 to 35** Tss in each st across, return (75 tss)

2 3 4 5 6 7 8 9 10 11 12 13 14 15 16 17 18 19 20 21 22 23 24 25 26 27 28 29 30 31 32 33 34 35

☐ **Rows 36 to 55** Tks in each st across, return (75 tk)

36 37 38 39 40 41 42 43 44 45 46 47 48 49 50 51 52 53 54 55

☐ **End** Do not fasten off.

Front, first side of the neck

Yarn A, slate blue.

☐ **Foundation** Go on from row 55 of the front. This is the left side as worn. The neck edge is at the end of the forward pass.

☐ **Row 56** Tks in each of the first 29 sts, leave the last 46 sts unworked, return (29 tk)

☐ **Rows 57 to 62** Tks in each st across to last 3 sts, tks2tog, tks in last st, return (23 tk)

57 58 59 60 61 62

☐ **Rows 63 to 66** Tks in each st across, return (23 tk)

63 64 65 66

☐ **End** Bind off the 23 sts left; they are the shoulder. Fasten off.

Front, second side of the neck

Yarns in order of use: A, slate blue; B, cream.

☐ **Foundation** Go back to row 55 of the front. With the right side facing, skip the next 17 unworked sts of row 55 for the neck. This is the right side as worn. The neck edge is at the beginning of the forward pass.

☐ **Row 56** Join yarn B with a sl st in the next st; the loop on the hook is the first st; tks in each st across, return (29 tk)

☐ **Rows 57 to 62** Tks2tog, tks in each st across, return (23 tk)

57 58 59 60 61 62

For your own crochet, gifts and handmade pieces you sell. Do not resell or share this PDF or copies of it.

☐ **Rows 63 to 66**	Tks in each st across, return	(23 tk)
63 64 65 66		
☐ **End**	Bind off the 23 sts left; they are the shoulder. Fasten off.	

Cuff rib: make 2

Yarn A, slate blue.

☐ **Foundation**	With yarn A, ch 9.	
☐ **Row 1 (RS)**	Sc in 2nd ch from hook and in each ch across	(8 sc)
☐ **Rows 2 to 28**	Ch 1, turn; sc in back loop only of each st across	(8 sc)
2 3 4 5 6 7 8 9 10 11 12 13 14 15 16 17 18 19 20 21 22 23 24 25 26 27 28		
☐ **End**	Fasten off.	

Sleeve: make 2

Yarn A, slate blue.

☐ **Foundation**	Colors: rows 1 to 4 yarn A; rows 5 to 8 yarn B; rows 9 to 42 yarn A. Hold a cuff rib with one long edge at the top and its right side facing. With the Tunisian hook and yarn A, beginning at the right-hand end of that edge, pull up a loop in the end of each rib row across (28 loops on the hook), return (28 tss). This is row 1.	
☐ **Rows 2 to 4**	Tss in each st across, return	(28 tss)
2 3 4		
☐ **Rows 5 to 8**	Tks in each st across, return	(28 tk)
5 6 7 8		
☐ **Row 9**	Tss in each st across, return	(28 tss)
☐ **Row 10**	M1, tss in each st across to last st, m1, tss in last st, return	(30 tss)
☐ **Rows 11 to 36**	Repeat Rows 9 and 10, 13 more times (32, 34, 36, 38, 40, 42, 44, 46, 48, 50, 52, 54, 56 tss at the ends of the repeats)	(56 tss)
11 12 13 14 15 16 17 18 19 20 21 22 23 24 25 26 27 28 29 30 31 32 33 34 35 36		
☐ **Rows 37 to 42**	Tss in each st across, return	(56 tss)
37 38 39 40 41 42		
☐ **End**	Bind off all 56 sts. The sleeve measures about 16 in (40.5 cm) across the top and 16¼ in (41.5 cm) long, with the cuff. Fasten off.	

For your own crochet, gifts and handmade pieces you sell. Do not resell or share this PDF or copies of it.

Neckband

Yarn A, slate blue.

☐ **Foundation**	Work this at step 2 of Assembly. With the plain hook and the right side facing, join yarn A in the first open st of the back neck, at the right shoulder seam (as worn); ch 1, sc in each of the 29 open sts of the back neck; down the left side of the neck, sc in the end of each of the next 5 rows, skip the end of the next row, sc in the end of each of the next 5 rows (10 sc); sc in each of the 17 sts left at the front, with the hook inserted as for tks; up the right side of the neck, sc in the end of each of the next 5 rows, skip the end of the next row, sc in the end of each of the next 5 rows (10 sc); 66 sc in all; join with sl st in first sc. This is rnd 1.
☐ **Rnd 2**	Ch 2; dc in each st around; join with sl st in first dc (66 dc)
☐ **Rnds 3 to 4** 3 4	Ch 2; **[**fpdc around next st, bpdc around next st**] 33 times**; join with sl st in first fpdc (33 fpdcs, 33 bpdcs)
☐ **End**	Fasten off.

Assembly

1. Shoulders: lay the front on the back with right sides together. Sew the 23 sts of each shoulder of the front to the 23 sts at that end of the top edge of the back. The middle 29 sts of the back stay open for the neck.

2. Neckband: work it now, as written above.

3. Markers: at each side edge of the back and of the front, place a marker in the end of row 39. The 28 rows from the marker to the shoulder seam, about 8 in (20.5 cm), are half of the armhole.

4. Sleeves: with right sides together, put the middle of the top edge of a sleeve at a shoulder seam and its two ends at the markers. Sew the top edge on, one st to one row end: 28 sts of the sleeve to the 28 row ends of the front, and the other 28 sts to the 28 row ends of the back.

5. Sides and sleeves: fold the sweater at the shoulders, right sides together. Sew each sleeve seam from the cuff edge to the underarm and go on down the side seam to the lower edge. At the two ribs the edges are the foundation chain and the last row of a rib: sew them stitch to stitch, 8 at the cuff and 8 at the hem. Between the ribs sew row end to row end. Turn the sweater right side out.

Finishing

- Weave in all the ends. Tunisian crochet curls at first: wet the sweater, or steam it as the yarn label allows, lay it flat to the measurements and let it dry.

In all: 4 pieces.

Found a mistake in this pattern? Tell us at flossfield.com, under Make a request.

For your own crochet, gifts and handmade pieces you sell. Do not resell or share this PDF or copies of it.