Football baby cocoon and hat

Newborn · US terms



Finished size
About 18½ in (47 cm) at the cocoon and about 18¾ in (47.5 cm) at the cocoon long

Skill
Easy
Basic stitches in rounds, two short ribs and sewing

Yarn
Medium (4), 2 colors

Hook
5.5 mm (US I-9)

Gauge
13 stitches and 15 rows to 4 in (10 cm)
In single crochet (UK double crochet).

What you need

Yarn A: saddle brown, main color **about 275 yd (251 m), an estimate**

Yarn B: white, contrast **about 45 yd (41 m), an estimate**

By weight: about 160 g in all, an estimate, where 100 g is 200 yd (183 m).

Hook: 5.5 mm (US I-9), or the size that gives you the gauge. Also: yarn needle, scissors, tape measure, sewing thread and pins.

To find how many balls: divide by the length on your yarn's label and round up. Buy them from one dye lot. The estimate is from the stitches of this size at this gauge.

Sizes

Size	Cocoon around	Cocoon long, with the rib	Hat around	Hat deep, with the rib	Yarn, an estimate
Newborn (this file)	**18½ in (47 cm)**	**18¾ in (47.5 cm)**	**13 in (33 cm)**	**5¾ in (14.5 cm)**	**about 320 yd (293 m)**
0 to 3 months	20¼ in (51.5 cm)	22¼ in (56.5 cm)	14¼ in (36 cm)	6¼ in (16 cm)	about 430 yd (393 m)

For your own crochet, gifts and handmade pieces you sell. Do not resell or share this PDF or copies of it.

Schematic

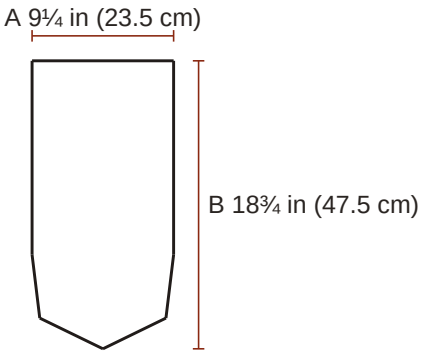

Cocoon, laid flat
A half the cocoon
B the cocoon long, with the rib

Gauge

13 stitches and 15 rows to 4 in (10 cm) in single crochet.

> **The swatch.** A test piece to measure and pull out. It is not the start of the pattern. Ch 21; begin in the 2nd ch from the hook and work 22 rows of single crochet on 20 sts, about 6¼ in (16 cm) wide and 5¾ in (14.5 cm) high, and measure 4 in (10 cm) in the middle. Use a larger hook if your swatch is small, a smaller one if it is large. The rounds have the same gauge as the rows. Ribs: 7 rounds to 4 in (10 cm), for the round of double crochet (UK: treble) and for the rounds of post stitches.

Notes

- Two sizes, by the distance around the baby and by the head.
- The hat is a little smaller around than the head, and stretches. No fit is promised beyond the measurements given.
- The rounds are not turned; the right side, the outside, always faces you. The rounds begin at the middle of the back.
- The chain at the start of a row or round (ch 1 for single crochet, ch 2 for double crochet) never counts as a stitch. Work the first stitch into the stitch at its base.
- For the rib, work around the post (the upright part) of the stitch below, not into its top.
- Whip stitch: put the needle in through both edges from the back to the front, take the yarn over the edge, and do the same again a short step farther on.
- Sew the laces down along both edges with small close stitches, so that no finger or toe can catch in them.
- To choose: measure around the baby over the arms, at the widest place, and from the shoulder to the heels with the knees drawn up. The cocoon is to be about 2 in (5 cm) wider around than the first measure and longer than the second.
- The set is for a baby who is awake and watched the whole time, with a grown-up at hand: for a short wear and for pictures. It is not for sleep, for a car seat or for carrying. Take it off as soon as the baby is warm or tired.
- Color changes in rounds: work the sl st that joins the round before with the new yarn. Cut the old yarn, leaving an end of about 6 in (15 cm), or, if it is needed again within 6 rnds, carry it loosely up the inside at the join.
- For a baby up to 16½ in (42 cm) around over the arms, head 13½ in (34.5 cm).

For your own crochet, gifts and handmade pieces you sell. Do not resell or share this PDF or copies of it.

Instructions

Newborn. US terms.

ch chain, **sl st** slip stitch, **sc** single crochet (UK double crochet), **dc** double crochet (UK treble), **Rnd** round, **st** stitch.
RS right side, the one that shows.
2 sc in next st: both in one stitch. **sc in each of next 6 sts**: one in each.
[ ] 6 times: work what is inside 6 times in all.
(6 sc): the stitches you have when the round is done. **How to read a pattern**.

Special stitches

fpdc (front post double crochet (UK front post treble)): Yarn over, insert the hook from the front to the back and to the front again around the post of the stitch named, pull up a loop, [yarn over and pull through 2 loops] twice. The front is the side that faces you. A post stitch takes the place of the stitch it is worked around: do not work into the top of that stitch as well.

bpdc (back post double crochet (UK back post treble)): As fpdc, but insert the hook from the back to the front and to the back again around the post.

Cocoon

Yarn A, saddle brown.

☐ **Foundation**	With yarn A, ch 4; join with sl st in first ch to form a ring. Colors: rnds 1 to 23 yarn A; rnds 24 to 26 yarn B; rnds 27 to 58 yarn A; rnds 59 to 61 yarn B; rnds 62 to 67 yarn A.	
☐ **Rnd 1**	Ch 1; 6 sc in ring; join with sl st in first sc	(6 sc)
☐ **Rnd 2**	Ch 1; sc in each st around; join with sl st in first sc	(6 sc)
☐ **Rnd 3**	Ch 1; 2 sc in each of next 6 sts; join with sl st in first sc	(12 sc)
☐ **Rnd 4**	Ch 1; sc in each st around; join with sl st in first sc	(12 sc)
☐ **Rnd 5**	Ch 1; **[**sc in next st, 2 sc in next st**] 6 times**; join with sl st in first sc	(18 sc)
☐ **Rnd 6**	Ch 1; sc in each st around; join with sl st in first sc	(18 sc)
☐ **Rnd 7**	Ch 1; **[**sc in next 2 sts, 2 sc in next st**] 6 times**; join with sl st in first sc	(24 sc)
☐ **Rnd 8**	Ch 1; sc in each st around; join with sl st in first sc	(24 sc)
☐ **Rnd 9**	Ch 1; **[**sc in next 3 sts, 2 sc in next st**] 6 times**; join with sl st in first sc	(30 sc)
☐ **Rnd 10**	Ch 1; sc in each st around; join with sl st in first sc	(30 sc)
☐ **Rnd 11**	Ch 1; **[**sc in next 4 sts, 2 sc in next st**] 6 times**; join with sl st in first sc	(36 sc)
☐ **Rnds 12 to 13** 12 13	Ch 1; sc in each st around; join with sl st in first sc	(36 sc)
☐ **Rnd 14**	Ch 1; **[**sc in next 5 sts, 2 sc in next st**] 6 times**; join with sl st in first sc	(42 sc)
☐ **Rnds 15 to 16** 15 16	Ch 1; sc in each st around; join with sl st in first sc	(42 sc)
☐ **Rnd 17**	Ch 1; **[**sc in next 6 sts, 2 sc in next st**] 6 times**; join with sl st in first sc	(48 sc)
☐ **Rnds 18 to 19** 18 19	Ch 1; sc in each st around; join with sl st in first sc	(48 sc)
☐ **Rnd 20**	Ch 1; **[**sc in next 7 sts, 2 sc in next st**] 6 times**; join with sl st in first sc	(54 sc)

For your own crochet, gifts and handmade pieces you sell. Do not resell or share this PDF or copies of it.

☐ **Rnds 21 to 22**	Ch 1; sc in each st around; join with sl st in first sc	(54 sc)

21 22

☐ **Rnd 23**	Ch 1; **[**sc in next 8 sts, 2 sc in next st**] 6 times**; join with sl st in first sc	(60 sc)
☐ **Rnds 24 to 64**	Ch 1; sc in each st around; join with sl st in first sc	(60 sc)

24 25 26 27 28 29 30 31 32 33 34 35 36 37 38 39 40 41 42 43 44 45 46 47 48 49 50 51 52 53 54 55 56 57 58 59 60 61 62 63 64

☐ **Rnd 65**	Ch 2; dc in each st around; join with sl st in first dc	(60 dc)
☐ **Rnds 66 to 67**	Ch 2; **[**fpdc around next st, bpdc around next st**] 30 times**; join with sl st in first fpdc	(30 fpdcs, 30 bpdcs)

66 67

☐ **End**	Fasten off. The cocoon is about 18½ in (47 cm) around and 18¾ in (47.5 cm) long, from the tip to the top of the rib.	

Long lace

Yarn B, white.

☐ **Foundation**	With yarn B, ch 22.	
☐ **Row 1 (RS)**	Sc in 2nd ch from hook and in each ch across	(21 sc)
☐ **End**	Fasten off, leaving an end of about 36 in (90 cm) for sewing. The lace is about 6½ in (16.5 cm) long and ¼ in (0.6 cm) wide (21 sts, 1 row).	

Cross lace: make 5

Yarn B, white.

☐ **Foundation**	With yarn B, ch 9.	
☐ **Row 1 (RS)**	Sc in 2nd ch from hook and in each ch across	(8 sc)
☐ **End**	Fasten off, leaving an end of about 16 in (40 cm) for sewing. The lace is about 2½ in (6.5 cm) long and ¼ in (0.6 cm) wide (8 sts, 1 row).	

Hat

Yarn A, saddle brown.

☐ **Foundation**	With yarn A, ch 4; join with sl st in first ch to form a ring. Colors: rnds 1 to 14 yarn A; rnds 15 and 16 yarn B; rnds 17 to 19 yarn A.	
☐ **Rnd 1**	Ch 1; 6 sc in ring; join with sl st in first sc	(6 sc)
☐ **Rnd 2**	Ch 1; 2 sc in each of next 6 sts; join with sl st in first sc	(12 sc)
☐ **Rnd 3**	Ch 1; **[**sc in next st, 2 sc in next st**] 6 times**; join with sl st in first sc	(18 sc)
☐ **Rnd 4**	Ch 1; **[**sc in next 2 sts, 2 sc in next st**] 6 times**; join with sl st in first sc	(24 sc)
☐ **Rnd 5**	Ch 1; **[**sc in next 3 sts, 2 sc in next st**] 6 times**; join with sl st in first sc	(30 sc)
☐ **Rnd 6**	Ch 1; **[**sc in next 4 sts, 2 sc in next st**] 6 times**; join with sl st in first sc	(36 sc)
☐ **Rnd 7**	Ch 1; **[**sc in next 5 sts, 2 sc in next st**] 6 times**; join with sl st in first sc	(42 sc)
☐ **Rnds 8 to 17**	Ch 1; sc in each st around; join with sl st in first sc	(42 sc)

8 9 10 11 12 13 14 15 16 17

For your own crochet, gifts and handmade pieces you sell. Do not resell or share this PDF or copies of it.

☐ **Rnd 18**	Ch 2; dc in each st around; join with sl st in first dc	(42 dc)
☐ **Rnd 19**	Ch 2; **[**fpdc around next st, bpdc around next st**] 21 times**; join with sl st in first fpdc	(21 fpdcs, 21 bpdcs)
☐ **End**	Fasten off. The hat is about 13 in (33 cm) around and 5¾ in (14.5 cm) deep, from the middle of the crown to the top of the rib.	

Long lace of the hat

Yarn B, white.

☐ **Foundation**	With yarn B, ch 8.	
☐ **Row 1 (RS)**	Sc in 2nd ch from hook and in each ch across	(7 sc)
☐ **End**	Fasten off, leaving an end of about 16 in (40 cm) for sewing. The lace is about 2¼ in (5.5 cm) long and ¼ in (0.6 cm) wide (7 sts, 1 row).	

Cross lace of the hat: make 3

Yarn B, white.

☐ **Foundation**	With yarn B, ch 6.	
☐ **Row 1 (RS)**	Sc in 2nd ch from hook and in each ch across	(5 sc)
☐ **End**	Fasten off, leaving an end of about 12 in (30 cm) for sewing. The lace is about 1½ in (4 cm) long and ¼ in (0.6 cm) wide (5 sts, 1 row).	

Assembly

1. Middle of the front: lay the cocoon flat, right side out, with the join of rnd 67, its last rnd, at the middle of the lower layer. The upper layer is the front. Counted from that join, the middle of the front lies between sts 30 and 31 of rnd 67. Stretch a sewing thread in a straight line on the upper layer from the tip, rnd 1, to that place, and pin it down. Do not follow the sts from rnd to rnd: they lean.

2. Long lace: the rnds are counted from the tip. Lay the long lace, right side up, on the thread, its lower end at the top of rnd 30 and its upper end at the top of rnd 54. The thread lies under the middle of its width. With its own end whip stitch it down all around, through the cocoon, and draw out the thread. The lace is about as long as these 24 rnds; pin both ends first and spread what is over or short along it.

3. Cross laces: lay one cross lace, right side up, across the long lace at the top of each of rnds 32, 37, 42, 47 and 52, so that half of its width lies below that line and half above it, with its middle, between its sts 4 and 5, on the long lace. With its own end whip stitch each one down all around, through the long lace too.

4. Laces of the hat: lay the hat flat with the join of rnd 19 at the middle of the lower layer. Stretch a thread on the upper layer, the front, from the middle of the crown to the place between sts 21 and 22 of rnd 19, counted from the join, and pin it down. The rnds are counted from the crown. Lay the long lace of the hat on the thread, right side up, from the top of rnd 5 down to the top of rnd 13, and whip stitch it down all around with its own end. Lay the 3 cross laces of the hat across it at the tops of rnds 7, 9 and 11, each with its st 3 on the long lace, and sew them down in the same way. Draw out the thread.

Finishing

- Weave in all the ends. Wash as the yarn label says and lay flat to the measurements to dry.

In all: 12 pieces.

Found a mistake in this pattern? Tell us at flossfield.com, under Make a request.

For your own crochet, gifts and handmade pieces you sell. Do not resell or share this PDF or copies of it.