Ghost with a little pumpkin

US terms



Finished size
About 4½ in (11.5 cm) tall

Skill
Easy
Five pieces worked in rounds and sewn together.

Yarn
Medium (4), 5 colors

Hook
3.5 mm (US E-4)

Gauge
20 stitches and 22 rounds to 4 in (10 cm)
In single crochet, in a spiral.

You will need

Yarn A: white, the ghost and its arms	**about 120 yd (110 m), an estimate**
Yarn B: black, the eyes and the mouth	**about 5 yd (5 m), an estimate**
Yarn C: rose, the cheeks	**about 5 yd (5 m), an estimate**
Yarn D: pumpkin, the pumpkin	**about 15 yd (14 m), an estimate**
Yarn E: olive, the stem of the pumpkin	**about 5 yd (5 m), an estimate**

Hook: 3.5 mm (US E-4). Also: toy stuffing, a yarn needle, a stitch marker, pins and scissors.

To find how many balls: divide by the length on your yarn's label and round up. The estimate is from the stitches of this size at this gauge, with 30 percent added.

Abbreviations

Written in US terms. Where the UK name differs it is given beside the US one.

sc	single crochet (UK dc, double crochet)
sc2tog	single crochet 2 stitches together (UK dc2tog, double crochet 2 stitches together)
MR	magic ring
RS	right side

Gauge

20 stitches and 22 rounds to 4 in (10 cm) in single crochet, in a spiral.

20 sc and 22 rounds = 4 in (10 cm), worked in a spiral. To check it, work a flat circle: 6 sc in a magic ring, then 6 more sc in each round (12, 18, 24, 30, 36). After round 6 it should measure about 2¼ in (5.5 cm) across. The stitches should be tight enough that the stuffing does not show.

For your own crochet, gifts and handmade pieces you sell. Do not resell or share this PDF.

Before you start

- Every piece is worked in a continuous spiral with the right side facing you: do not join and do not turn. Put the marker in the first stitch of each round and move it up.
- Square brackets hold a repeat; work it as many times as the line says. The number in parentheses is the count at the end of the round.
- Magic ring: wrap the yarn round two fingers, work round 1 into the loop and pull the tail to close it. Or chain 2 and work round 1 into the first chain.
- Center line: places on a piece are given by round and by stitches from a center line. It is half way round from where the rounds begin. Mark it with a pin or a scrap of yarn as listed here, run it straight from round 1 to the last round by eye, and count out from it along the round, in stitches and half stitches.
- Ghost: the center line runs between stitches 30 and 31 of round 29 (60 sts). It faces the front, round 1 at the top.
- Right and left are as you look at the front of the toy. Rounds are counted from the start of each piece.
- To work sc2tog, put the hook under the front loop only of each of the next 2 stitches, yarn over, pull through both loops, yarn over, pull through 2 loops.
- No plastic eyes are used: every detail is worked in yarn.
- The rounds and stitches are the same for every size; the yarn and the hook make the difference. Lengths in the words (tails, ovals, details) are for Standard: for another size multiply them by the number in its line.
- Small: fine (2, sport) yarn, 2.25 mm (B-1) hook, 27 sc and 30 rounds to 4 in (10 cm): about 3 3/8 in (8.6 cm) tall; multiply lengths by 0.74; about 0.74 times the yarn.
- Large: bulky (5, chunky) yarn, 5 mm (H-8) hook, 14 sc and 15.4 rounds to 4 in (10 cm): about 6½ in (16.5 cm) tall; multiply lengths by 1.4; about 1.4 times the yarn.
- Jumbo: super bulky (6, plush or velvet) yarn, 6.5 mm (K-10½) hook, 11 sc and 12.1 rounds to 4 in (10 cm): about 8¼ in (21 cm) tall; multiply lengths by 1.8; about 1.8 times the yarn.
- Every size is approximate and follows from your gauge and how firmly you stuff.

Instructions

Square brackets [ ] hold a repeat: work what is inside as many times as it says. The count in round brackets at the end of a line is what that line leaves. Tick the box when a round is done. In UK terms sc is double crochet and sc2tog is double crochet 2 stitches together.

Ghost

Yarn A, white.

☐ **Foundation**	Make a magic ring.	
☐ **Rnd 1 (RS)**	6 sc in MR	**(6 sc)**
☐ **Rnd 2**	2 sc in each st around	**(12 sc)**
☐ **Rnd 3**	**[**sc in next st, 2 sc in next st**] 6 times**	**(18 sc)**
☐ **Rnd 4**	**[**2 sc in next st, sc in next 2 sts**] 6 times**	**(24 sc)**
☐ **Rnd 5**	**[**sc in next 3 sts, 2 sc in next st**] 6 times**	**(30 sc)**
☐ **Rnd 6**	**[**sc in next 2 sts, 2 sc in next st, sc in next 2 sts**] 6 times**	**(36 sc)**
☐ **Rnd 7**	**[**2 sc in next st, sc in next 5 sts**] 6 times**	**(42 sc)**

For your own crochet, gifts and handmade pieces you sell. Do not resell or share this PDF.

☐ **Rnd 8**	**[**sc in next 6 sts, 2 sc in next st**] 6 times**	**(48 sc)**
☐ **Rnds 9 to 22**	Sc in each st around	**(48 sc)**

A box for each round, 9 to 22: tick them off as you go.

9 10 11 12 13 14 15 16 17 18 19 20 21 22

☐ **Rnd 23**	**[**sc in next 3 sts, 2 sc in next st, sc in next 4 sts**] 6 times**	**(54 sc)**
☐ **Rnds 24 to 28**	Sc in each st around	**(54 sc)**

A box for each round, 24 to 28: tick them off as you go.

24 25 26 27 28

☐ **Rnd 29**	**[**2 sc in next st, sc in next 8 sts**] 6 times**	**(60 sc)**
☐ **Rnd 30**	Sc in each st around	**(60 sc)**
☐ **Rnd 31**	Working in BLO all the way round, **[**sc in next 8 sts, sc2tog**] 6 times**	**(54 sc)**
☐ **Rnd 32**	**[**sc in next 3 sts, sc2tog, sc in next 4 sts**] 6 times**	**(48 sc)**
☐ **Rnd 33**	**[**sc2tog, sc in next 6 sts**] 6 times**	**(42 sc)**
☐ **Rnd 34**	**[**sc in next 5 sts, sc2tog**] 6 times**	**(36 sc)**
☐ **Rnd 35**	**[**sc in next 2 sts, sc2tog, sc in next 2 sts**] 6 times**	**(30 sc)**
☐ **Rnd 36**	**[**sc2tog, sc in next 3 sts**] 6 times**	**(24 sc)**

Stuff firmly now, and keep adding stuffing until the last round.

☐ **Rnd 37**	**[**sc in next 2 sts, sc2tog**] 6 times**	**(18 sc)**
☐ **Rnd 38**	**[**sc in next st, sc2tog**] 6 times**	**(12 sc)**
☐ **Rnd 39**	**[**sc2tog**] 6 times**	**(6 sc)**
☐ **End**	Fasten off, leaving an 8 in (20 cm) tail. Thread the tail through the front loop of each of the last 6 stitches, pull it tight to close the hole and bury the end inside.	

Arm: make 2

Yarn A, white.

☐ **Foundation**	Make a magic ring.	
☐ **Rnd 1 (RS)**	6 sc in MR	**(6 sc)**
☐ **Rnd 2**	**[**2 sc in next st, sc in next st, 2 sc in next st**] 2 times**	**(10 sc)**
☐ **Rnd 3**	**[**sc in next 2 sts, 2 sc in next st, sc in next 2 sts**] 2 times**	**(12 sc)**
☐ **Rnds 4 to 6**	Sc in each st around	**(12 sc)**

A box for each round, 4 to 6: tick them off as you go.

4 5 6

☐ **End**	Fasten off, leaving a 14 in (36 cm) tail for sewing. Stuff lightly up to the open edge.	

For your own crochet, gifts and handmade pieces you sell. Do not resell or share this PDF.

Little pumpkin

Yarn D, pumpkin.

☐ **Foundation**	Make a magic ring.	
☐ **Rnd 1 (RS)**	6 sc in MR	**(6 sc)**
☐ **Rnd 2**	2 sc in each st around	**(12 sc)**
☐ **Rnd 3**	**[**sc in next st, 2 sc in next st**] 6 times**	**(18 sc)**
☐ **Rnd 4**	**[**2 sc in next st, sc in next 2 sts**] 6 times**	**(24 sc)**
☐ **Rnds 5 to 7**	Sc in each st around	**(24 sc)**

A box for each round, 5 to 7: tick them off as you go.

5 6 7

Stuff firmly now, and keep adding stuffing until the last round.

☐ **Rnd 8**	**[**sc in next 2 sts, sc2tog**] 6 times**	**(18 sc)**
☐ **Rnd 9**	**[**sc in next st, sc2tog**] 6 times**	**(12 sc)**
☐ **Rnd 10**	**[**sc2tog**] 6 times**	**(6 sc)**
☐ **End**	Fasten off, leaving an 8 in (20 cm) tail. Thread the tail through the front loop of each of the last 6 stitches, pull it tight to close the hole and bury the end inside.	

Pumpkin stem

Yarn E, olive.

☐ **Foundation**	Make a magic ring.	
☐ **Rnd 1 (RS)**	5 sc in MR	**(5 sc)**
☐ **Rnds 2 to 3**	Sc in each st around	**(5 sc)**

A box for each round, 2 to 3: tick them off as you go.

2 3

☐ **End**	Fasten off, leaving a 10 in (25 cm) tail for sewing. Do not stuff.	

Assembly

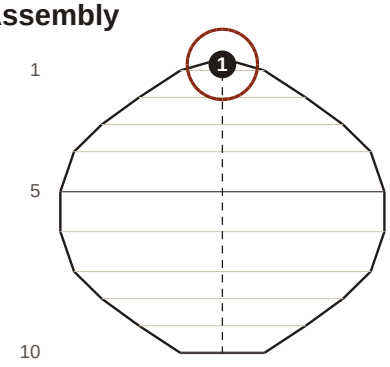

Little pumpkin: 1 pumpkin stem

Each line is a round, counted as the rounds are worked. The upright broken line is the center line. A place with a broken edge is on the far side.

For your own crochet, gifts and handmade pieces you sell. Do not resell or share this PDF.

1. In every step: where a piece meets or overlaps another, sew through both. Where no tail is left or a tail is too short, sew with a new length of the yarn of the piece you are putting on. Pin the two arms to the ghost: the middle of each open edge lies on round 17, one to each side, 11 stitches from the center line (22 stitches apart). The edge (12 sts) covers about rounds 15 to 19 of the ghost. They point out to the side and forward. Sew all the way round with the tail, adding a little stuffing before the last few stitches if the edge is still soft.

2. Set the little pumpkin against the front of the ghost, its closed hole down on the table, its middle 2½ stitches to the right of the center line. It touches the ghost at about round 28. Sew the little pumpkin to the ghost there, in a circle about 5/8 in (16 mm) across.

3. Pin the pumpkin stem to the little pumpkin: the middle of the open edge lies over the middle of round 1 of the little pumpkin. The edge (5 sts) lies all the way round on about round 1. It points up. Sew all the way round with the tail.

Finishing

- Embroider with one strand of yarn and the yarn needle when the pieces round the place are sewn on; begin and end each strand inside the toy. Satin stitch is straight stitches side by side until the shape is filled.
- Eyes: with B (black), in satin stitch, an oval about 5/16 in (8 mm) wide and ½ in (13 mm) tall, its middle on the ghost on round 12, one to each side, 4½ stitches from the center line (9 stitches apart).
- Cheeks: with C (rose), in satin stitch, an oval about 5/16 in (8 mm) wide and 3/16 in (5 mm) tall, its middle on the ghost on round 15, one to each side, 8 stitches from the center line (16 stitches apart).
- Mouth: with B (black), in satin stitch, a round dot about ¼ in (6 mm) across, its middle on the ghost between rounds 15 and 16, on the center line.
- Weave every tail through the toy and trim it. For a toy that will be played with, go round each seam a second time with a new length of yarn. Check the seams and small parts from time to time.

In all: 5 pieces; 1,913 stitches (1,602 in the ghost, 64 in each arm, 168 in the little pumpkin, 15 in the pumpkin stem); 10 ends to weave in.

Found a mistake in this pattern? Tell us at flossfield.com, under Make a request.

For your own crochet, gifts and handmade pieces you sell. Do not resell or share this PDF.