Friendly shark

US terms



Finished size
About 5¾ in (14.5 cm) tall

Skill
Intermediate
Eleven pieces worked in rounds and sewn together.

Yarn
Medium (4), 4 colors

Hook
3.5 mm (US E-4)

Gauge
20 stitches and 22 rounds to 4 in (10 cm)
In single crochet, in a spiral.

You will need

Yarn A: slate blue, the main color	**about 145 yd (133 m), an estimate**
Yarn B: white, mouth patch and tummy patch	**about 10 yd (9 m), an estimate**
Yarn C: charcoal, the details	**about 5 yd (5 m), an estimate**
Yarn D: rose, the details	**about 5 yd (5 m), an estimate**

Hook: 3.5 mm (US E-4). Also: toy stuffing, a yarn needle, a stitch marker, pins, scissors and two black plastic eyes with washers, 10 mm.

To find how many balls: divide by the length on your yarn's label and round up. The estimate is from the stitches of this size at this gauge, with 30 percent added.

Abbreviations

Written in US terms. Where the UK name differs it is given beside the US one.

sc	single crochet (UK dc, double crochet)
sc2tog	single crochet 2 stitches together
MR	magic ring
RS	right side

Gauge

20 stitches and 22 rounds to 4 in (10 cm) in single crochet, in a spiral.

20 sc and 22 rounds = 4 in (10 cm), worked in a spiral. To check it, work a flat circle: 6 sc in a magic ring, then 6 more sc in each round (12, 18, 24, 30, 36). After round 6 it should measure about 2¼ in (5.5 cm) across. The stitches should be tight enough that the stuffing does not show.

For your own crochet, gifts and handmade pieces you sell. Do not resell or share this PDF.

Before you start

- Every piece is worked in a continuous spiral with the right side facing you: do not join and do not turn. Put the marker in the first stitch of each round and move it up.
- Square brackets hold a repeat; work it as many times as the line says. The number in parentheses is the count at the end of the round.
- Magic ring: wrap the yarn round two fingers, work round 1 into the loop and pull the tail to close it. Or chain 2 and work round 1 into the first chain.
- Center line: places on a piece are given by round and by stitches from a center line. It is half way round from where the rounds begin. Mark it with a pin or a scrap of yarn as listed here, run it straight from round 1 to the last round by eye, and count out from it along the round, in stitches and half stitches.
- Head: the center line runs between stitches 27 and 28 of round 11 (54 sts). It faces the front, round 1 at the top.
- Body: the center line runs between stitches 18 and 19 of round 6 (36 sts). It faces the front.
- Right and left are as you look at the front of the toy. Rounds are counted from the start of each piece.
- To work sc2tog, put the hook under the front loop only of each of the next 2 stitches, yarn over, pull through both loops, yarn over, pull through 2 loops.
- For a child under three, or a pet, embroider the eyes instead: satin stitch dots of the same size in C (charcoal).
- The rounds and stitches are the same for every size; the yarn and the hook make the difference. Lengths in the words (tails, ovals, details) are for Standard: for another size multiply them by the number in its line.
- Small: fine (2, sport) yarn, 2.25 mm (B-1) hook, 27 sc and 30 rounds to 4 in (10 cm): about 4¼ in (11 cm) tall; eyes 7 mm; multiply lengths by 0.74; about 0.74 times the yarn.
- Large: bulky (5, chunky) yarn, 5 mm (H-8) hook, 14 sc and 15.4 rounds to 4 in (10 cm): about 8¼ in (21 cm) tall; eyes 14 mm; multiply lengths by 1.4; about 1.4 times the yarn.
- Jumbo: super bulky (6, plush or velvet) yarn, 6.5 mm (K-10½) hook, 11 sc and 12.1 rounds to 4 in (10 cm): about 10½ in (26.5 cm) tall; eyes 18 mm; multiply lengths by 1.8; about 1.8 times the yarn.

Instructions

Square brackets [ ] hold a repeat: work what is inside as many times as it says. The count in round brackets at the end of a line is what that line leaves. Tick the box when a round is done. In UK terms sc is double crochet.

Head

Yarn A, slate blue.

☐ **Foundation**	Make a magic ring.	
☐ **Rnd 1 (RS)**	6 sc in MR	**(6 sc)**
☐ **Rnd 2**	2 sc in each st around	**(12 sc)**
☐ **Rnd 3**	**[**sc in next st, 2 sc in next st**] 6 times**	**(18 sc)**
☐ **Rnd 4**	**[**2 sc in next st, sc in next 2 sts**] 6 times**	**(24 sc)**
☐ **Rnd 5**	**[**sc in next 3 sts, 2 sc in next st**] 6 times**	**(30 sc)**
☐ **Rnd 6**	**[**sc in next 2 sts, 2 sc in next st, sc in next 2 sts**] 6 times**	**(36 sc)**
☐ **Rnd 7**	**[**2 sc in next st, sc in next 5 sts**] 6 times**	**(42 sc)**
☐ **Rnd 8**	Sc in each st around	**(42 sc)**

For your own crochet, gifts and handmade pieces you sell. Do not resell or share this PDF.

☐ **Rnd 9**	**[**sc in next 6 sts, 2 sc in next st**] 6 times**	**(48 sc)**
☐ **Rnd 10**	Sc in each st around	**(48 sc)**
☐ **Rnd 11**	**[**sc in next 3 sts, 2 sc in next st, sc in next 4 sts**] 6 times**	**(54 sc)**
☐ **Rnds 12 to 17**	Sc in each st around	**(54 sc)**

A box for each round, 12 to 17: tick them off as you go.

☐ 12 ☐ 13 ☐ 14 ☐ 15 ☐ 16 ☐ 17

☐ **Rnd 18**	**[**sc2tog, sc in next 7 sts**] 6 times**	**(48 sc)**
☐ **Rnd 19**	Sc in each st around	**(48 sc)**
☐ **Rnd 20**	**[**sc in next 6 sts, sc2tog**] 6 times**	**(42 sc)**
☐ **Rnd 21**	**[**sc in next 2 sts, sc2tog, sc in next 3 sts**] 6 times**	**(36 sc)**
☐ **Rnd 22**	**[**sc2tog, sc in next 4 sts**] 6 times**	**(30 sc)**
☐ **Rnd 23**	**[**sc in next 3 sts, sc2tog**] 6 times**	**(24 sc)**

Fix the eyes now (see Face and details). Then stuff firmly, and keep adding stuffing until the last round.

☐ **Rnd 24**	**[**sc in next st, sc2tog, sc in next st**] 6 times**	**(18 sc)**
☐ **Rnd 25**	**[**sc2tog, sc in next st**] 6 times**	**(12 sc)**
☐ **Rnd 26**	**[**sc2tog**] 6 times**	**(6 sc)**
☐ **End**	Fasten off, leaving an 8 in (20 cm) tail. Thread the tail through the front loop of each of the last 6 stitches, pull it tight to close the hole and bury the end inside.	

Body

Yarn A, slate blue.

Round 1 is the middle of the base.

☐ **Foundation**	Make a magic ring.	
☐ **Rnd 1 (RS)**	6 sc in MR	**(6 sc)**
☐ **Rnd 2**	2 sc in each st around	**(12 sc)**
☐ **Rnd 3**	**[**sc in next st, 2 sc in next st**] 6 times**	**(18 sc)**
☐ **Rnd 4**	**[**2 sc in next st, sc in next 2 sts**] 6 times**	**(24 sc)**
☐ **Rnd 5**	**[**sc in next 3 sts, 2 sc in next st**] 6 times**	**(30 sc)**
☐ **Rnd 6**	**[**sc in next 2 sts, 2 sc in next st, sc in next 2 sts**] 6 times**	**(36 sc)**
☐ **Rnds 7 to 11**	Sc in each st around	**(36 sc)**

A box for each round, 7 to 11: tick them off as you go.

☐ 7 ☐ 8 ☐ 9 ☐ 10 ☐ 11

☐ **Rnd 12**	**[**sc2tog, sc in next 4 sts**] 6 times**	**(30 sc)**

For your own crochet, gifts and handmade pieces you sell. Do not resell or share this PDF.

☐ **Rnds 13 to 14**	Sc in each st around	**(30 sc)**

A box for each round, 13 to 14: tick them off as you go.

13 14

☐ **Rnd 15**	**[**sc in next 3 sts, sc2tog**] 6 times**	**(24 sc)**
☐ **Rnds 16 to 17**	Sc in each st around	**(24 sc)**

A box for each round, 16 to 17: tick them off as you go.

16 17

☐ **End**	Fasten off, leaving a 22 in (56 cm) tail for sewing. Stuff firmly up to the open edge.	

Back fin

Yarn A, slate blue.

☐ **Foundation**	Make a magic ring.	
☐ **Rnd 1 (RS)**	4 sc in MR	**(4 sc)**
☐ **Rnd 2**	**[**sc in next st, 2 sc in next st**] 2 times**	**(6 sc)**
☐ **Rnd 3**	**[**sc in next st, 2 sc in next st**] 3 times**	**(9 sc)**
☐ **Rnd 4**	**[**2 sc in next st, sc in next 2 sts**] 3 times**	**(12 sc)**
☐ **Rnd 5**	**[**sc in next 3 sts, 2 sc in next st**] 3 times**	**(15 sc)**
☐ **Rnd 6**	**[**sc in next 2 sts, 2 sc in next st, sc in next 2 sts**] 3 times**	**(18 sc)**
☐ **Rnd 7**	**[**2 sc in next st, sc in next 5 sts**] 3 times**	**(21 sc)**
☐ **End**	Fasten off, leaving a 20 in (51 cm) tail for sewing. Stuff very lightly. Press it flat, so that the last round makes a straight double edge of 10½ stitches. The odd stitch lies at one fold.	

Mouth patch

Yarn B, white.

☐ **Foundation**	Make a magic ring.	
☐ **Rnd 1 (RS)**	6 sc in MR	**(6 sc)**
☐ **Rnd 2**	2 sc in each st around	**(12 sc)**
☐ **Rnd 3**	**[**sc in next st, 2 sc in next st**] 6 times**	**(18 sc)**
☐ **Rnd 4**	**[**2 sc in next st, sc in next 2 sts**] 6 times**	**(24 sc)**
☐ **End**	Fasten off, leaving a 22 in (56 cm) tail for sewing. Do not stuff. Press it flat with the right side up.	

Tummy patch

Yarn B, white.

☐ **Foundation**	Make a magic ring.	
☐ **Rnd 1 (RS)**	6 sc in MR	**(6 sc)**
☐ **Rnd 2**	2 sc in each st around	**(12 sc)**

For your own crochet, gifts and handmade pieces you sell. Do not resell or share this PDF.

☐ **Rnd 3**	**[**sc in next st, 2 sc in next st**] 6 times**	**(18 sc)**
☐ **Rnd 4**	**[**2 sc in next st, sc in next 2 sts**] 6 times**	**(24 sc)**
☐ **End**	Fasten off, leaving a 22 in (56 cm) tail for sewing. Do not stuff. Press it flat with the right side up.	

Side fin: make 2

Yarn A, slate blue.

☐ **Foundation**	Make a magic ring.	
☐ **Rnd 1 (RS)**	5 sc in MR	**(5 sc)**
☐ **Rnd 2**	Sc in next st, 2 sc in next st, sc in next 2 sts, 2 sc in next st	**(7 sc)**
☐ **Rnd 3**	Sc in next st, **[**2 sc in next st, sc in next 2 sts**] 2 times**	**(9 sc)**
☐ **Rnd 4**	2 sc in next st, sc in next 3 sts, 2 sc in next st, sc in next 4 sts	**(11 sc)**
☐ **Rnd 5**	Sc in next 4 sts, 2 sc in next st, sc in next 5 sts, 2 sc in next st	**(13 sc)**
☐ **Rnd 6**	Sc in next 2 sts, 2 sc in next st, sc in next 6 sts, 2 sc in next st, sc in next 3 sts	**(15 sc)**
☐ **Rnd 7**	Sc in each st around	**(15 sc)**
☐ **Rnd 8**	Sc2tog, sc in next 5 sts, sc2tog, sc in next 6 sts	**(13 sc)**
☐ **End**	Fasten off, leaving a 14 in (36 cm) tail for sewing. Do not stuff. Press it flat, so that the last round makes a straight double edge of 6½ stitches. The odd stitch lies at one fold.	

Foot fin: make 2

Yarn A, slate blue.

☐ **Foundation**	Make a magic ring.	
☐ **Rnd 1 (RS)**	6 sc in MR	**(6 sc)**
☐ **Rnd 2**	**[**2 sc in next st, sc in next st, 2 sc in next st**] 2 times**	**(10 sc)**
☐ **Rnd 3**	Sc in next st, **[**2 sc in next st, sc in next 2 sts**] 3 times**	**(13 sc)**
☐ **Rnd 4**	**[**2 sc in next st, sc in next 3 sts**] 2 times**, 2 sc in next st, sc in next 4 sts	**(16 sc)**
☐ **Rnd 5**	Sc in each st around	**(16 sc)**
☐ **Rnd 6**	**[**sc in next 6 sts, sc2tog**] 2 times**	**(14 sc)**
☐ **Rnd 7**	**[**sc in next 2 sts, sc2tog, sc in next 3 sts**] 2 times**	**(12 sc)**
☐ **End**	Fasten off, leaving a 14 in (36 cm) tail for sewing. Stuff very lightly. Press it flat, so that the last round makes a straight double edge of 6 stitches.	

Tail fin: make 2

Yarn A, slate blue.

☐ **Foundation**	Make a magic ring.	
☐ **Rnd 1 (RS)**	4 sc in MR	**(4 sc)**

For your own crochet, gifts and handmade pieces you sell. Do not resell or share this PDF.

☐ **Rnd 2**	2 sc in each of next 2 sts, sc in next st, 2 sc in next st	**(7 sc)**
☐ **Rnd 3**	2 sc in next st, sc in next st, 2 sc in next st, sc in next 2 sts, 2 sc in next st, sc in next st	**(10 sc)**
☐ **Rnd 4**	**[**2 sc in next st, sc in next 2 sts**] 2 times**, 2 sc in next st, sc in next 3 sts	**(13 sc)**
☐ **Rnd 5**	Sc in next 5 sts, 2 sc in next st, sc in next 6 sts, 2 sc in next st	**(15 sc)**
☐ **Rnd 6**	Sc in each st around	**(15 sc)**
☐ **Rnd 7**	Sc in next 2 sts, sc2tog, sc in next 6 sts, sc2tog, sc in next 3 sts	**(13 sc)**
☐ **End**	Fasten off, leaving a 14 in (36 cm) tail for sewing. Do not stuff. Press it flat, so that the last round makes a straight double edge of 6½ stitches. The odd stitch lies at one fold.	

Assembly

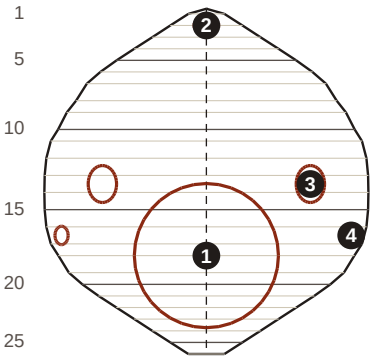

Head: 1 mouth patch, 2 back fin, 3 eyes, 4 cheeks

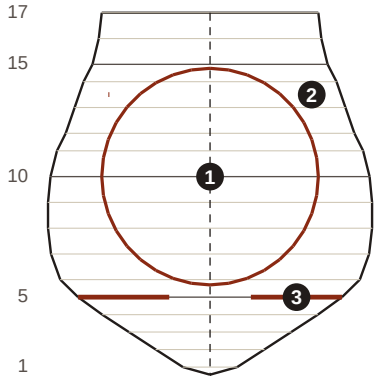

Body: 1 tummy patch, 2 side fins, 3 foot fins

Each line is a round, counted as the rounds are worked. The upright broken line is the center line. A place with a broken edge is on the far side.

1. Set the head on the open edge of the body (24 sts), center lines in line: the edge lies on round 23 of the head (24 sts). With the tail of the body, sew every stitch of the edge to the head, and top up the stuffing in the neck before the last stitches so that the head does not wobble.

2. Lay the mouth patch flat on the head, right side out, the middle of it on round 18, on the center line. Ease it into an oval about 1 7/8 in (4.8 cm) wide and 1 in (2.5 cm) tall as you pin it. Sew down all 24 stitches of the edge.

3. Pin the back fin to the head: the middle of the flat edge lies on round 2, on the center line. The flat edge runs from front to back over the top of the head, half of it on each side of that place. It points up. Sew through both layers of the 10½-stitch edge with the tail.

4. Lay the tummy patch flat on the body, right side out, the middle of it on round 10, on the center line. Sew down all 24 stitches of the edge.

5. Pin the two side fins to the body: the middle of each flat edge lies between rounds 13 and 14, one to each side, 7½ stitches from the center line (15 stitches apart). The flat edge lies with its upper end on about round 16, 4½ stitches from the center line, and its lower end on about round 10, 10½ stitches from it. They point out to the side and down. Sew through both layers of the 6½-stitch edge with the tail.

6. Pin the two foot fins to the body: the middle of each flat edge lies on round 5, one to each side, 4½ stitches from the center line (9 stitches apart). The flat edge runs along the round, half of it on each side of that place. They point forward and out to the side from under the front edge of the body, lying along the table. Sew through both layers of the 6-stitch edge with the tail.

For your own crochet, gifts and handmade pieces you sell. Do not resell or share this PDF.

7. Set the two tail fins one above the other at the lower back of the body: the lower one with its flat edge along round 5, its middle 12½ stitches to the right of the center line, the upper one with its flat edge along round 7, its middle 15 stitches to the right of the center line. Both point to the right and back, the lower one along the table and the upper one up, like an open V on its side. Sew through both layers of each 6½-stitch edge with its own tail of yarn, then take a few stitches between the two.

Finishing

- Put in the plastic eyes when the words of a piece say so, or embroider eyes in the same places with the other details. Embroider with one strand of yarn and the yarn needle when the pieces round the place are sewn on; begin and end each strand inside the toy. Satin stitch is straight stitches side by side until the shape is filled. Backstitch is a line of short stitches end to end: bring the needle up one stitch ahead, put it down at the end of the stitch before, and repeat.
- Eyes: two 10 mm black plastic eyes, on the head between rounds 13 and 14, one to each side, 6 stitches from the center line (12 stitches apart).
- Cheeks: with D (rose), in satin stitch, an oval about ¼ in (6 mm) wide and 3/16 in (5 mm) tall, its middle on the head between rounds 16 and 17, one to each side, 10 stitches from the center line (20 stitches apart).
- Toothy grin: with C (charcoal), in backstitch, a zigzag line of eight short straight stitches, about 1 1/8 in (29 mm) wide and 3/16 in (5 mm) tall. It begins and ends at its upper edge, with four points down. The middle of its upper edge is on the mouth patch, centered, 1/8 in (3 mm) above the middle of the mouth patch.
- Weave every tail through the toy and trim it. For a toy that will be played with, go round each seam a second time with a new length of yarn. Check the seams and small parts from time to time.

In all: 11 pieces; 2,125 stitches (948 in the head, 468 in the body, 85 in the back fin, 60 in the mouth patch, 60 in the tummy patch, 88 in each side fin, 87 in each foot fin, 77 in each tail fin); 22 ends to weave in.

Found a mistake in this pattern? Tell us at flossfield.com, under Make a request.

For your own crochet, gifts and handmade pieces you sell. Do not resell or share this PDF.