Girls' flounce bikini in bright stripes

6 years, to fit chest 25 in (63.5 cm) · US terms



Finished size

About 24 in (61 cm) at the top around the chest and about 4¾ in (12 cm) at the top high

To fit chest 25 in (63.5 cm), waist 22½ in (57 cm), hip 25 in (63.5 cm)

Skill

Intermediate

Basic stitches in rows and rounds, simple shaping, elastic in casings, a lining

Yarn

Light (3), 4 colors

Hook

4.5 mm (US 7)

Gauge

16 stitches and 18½ rows to 4 in (10 cm)

In single crochet (UK double crochet).

What you need

Yarn A: coral, main color	**about 275 yd (251 m), an estimate**
Yarn B: lemon, contrast	**about 40 yd (37 m), an estimate**
Yarn C: aqua, color 3	**about 110 yd (101 m), an estimate**
Yarn D: white, color 4	**about 160 yd (146 m), an estimate**

By weight: about 230 g in all, an estimate, where 100 g is 250 yd (229 m).

Hook: 4.5 mm (US 7), or the size that gives you the gauge. Also: yarn needle, scissors, tape measure, about ¾ yd (0.7 m) of stretch swimsuit lining at least 56 in (142 cm) wide (enough for every size), sewing thread and a sewing needle, pins, about 1 yd (0.9 m) of elastic ½ in (12 mm) wide (enough for every size), about 1 yd (0.9 m) of elastic ¾ in (2 cm) wide (enough for every size), about 1 yd (0.9 m) of swimwear elastic ¼ in (6 mm) wide (enough for every size) and a safety pin.

To find how many balls: divide by the length on your yarn's label and round up. Buy them from one dye lot. The estimate is from the stitches of this size at this gauge.

Sizes

Size	Chest	Yarn, an estimate	Top around the chest	Top high	Flounce deep	Flounce around its edge	Straps long, between the sewn ends	Bottom around the hips	Bottom side seam, with the waist casing	Bottom front from its top	Bottom back from its top	Bottom crotch across, with the edgings	Bottom around each leg opening
2 years	21 in (53.5 cm)	about 415 yd (379 m)	19½ in (49.5 cm)	4 in (10 cm)	2¾ in (7 cm)	39 in (99 cm)	10 in (25.5 cm)	21½ in (54.5 cm)	3¼ in (8.5 cm)	6¾ in (17 cm)	8 in (20.5 cm)	3½ in (9 cm)	12¼ in (31 cm)

For your own crochet, gifts and handmade pieces you sell. Do not resell or share this PDF or copies of it.

4 years	23 in (58.5 cm)	about 475 yd (434 m)	22½ in (57 cm)	4¼ in (11 cm)	2¾ in (7 cm)	45 in (114.5 cm)	10¾ in (27.5 cm)	22½ in (57 cm)	3½ in (9 cm)	7 in (18 cm)	8¼ in (21 cm)	3½ in (9 cm)	12½ in (32 cm)
6 years (this file)	**25 in (63.5 cm)**	**about 585 yd (535 m)**	**24 in (61 cm)**	**4¾ in (12 cm)**	**3¾ in (9.5 cm)**	**48 in (122 cm)**	**11¼ in (28.5 cm)**	**24½ in (62 cm)**	**3¾ in (9.5 cm)**	**7½ in (19 cm)**	**8¾ in (22 cm)**	**3½ in (9 cm)**	**13¾ in (35 cm)**
8 years	26½ in (67.5 cm)	about 630 yd (576 m)	25½ in (65 cm)	5 in (12.5 cm)	3¾ in (9.5 cm)	51 in (129.5 cm)	12 in (30.5 cm)	26½ in (67.5 cm)	4 in (10 cm)	8 in (20.5 cm)	9¼ in (23.5 cm)	4 in (10 cm)	14 in (35.5 cm)
10 years	28 in (71 cm)	about 705 yd (645 m)	27 in (68.5 cm)	5½ in (14 cm)	3¾ in (9.5 cm)	54 in (137 cm)	13½ in (34.5 cm)	28½ in (72.5 cm)	4¼ in (11 cm)	8¾ in (22 cm)	10 in (25.5 cm)	4 in (10 cm)	15½ in (39.5 cm)
12 years	30 in (76 cm)	about 825 yd (754 m)	28½ in (72.5 cm)	5¾ in (14.5 cm)	4¾ in (12 cm)	57 in (145 cm)	14¼ in (36 cm)	30½ in (77.5 cm)	4¾ in (12 cm)	9¼ in (23.5 cm)	10½ in (26.5 cm)	4 in (10 cm)	16½ in (42 cm)

Schematic

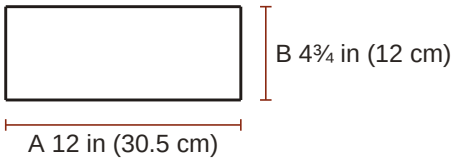

Band of the top
A half the top the chest
B the top high

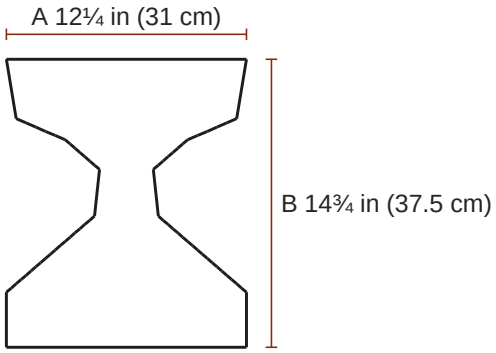

Bottom
A half the bottom the hips
B from top to bottom

Gauge

16 stitches and 18½ rows to 4 in (10 cm) in single crochet.

> **The swatch.** A test piece to measure and pull out. It is not the start of the pattern. Ch 25; begin in the 2nd ch from the hook and work 28 rows of single crochet on 24 sts, about 6 in (15 cm) wide and 6 in (15 cm) high, and measure 4 in (10 cm) in the middle. Use a larger hook if your swatch is small, a smaller one if it is large. Rounds and edgings of single crochet are as high as rows. Double crochet (UK: treble) rounds of the flounce: 8.5 rnds to 4 in (10 cm); its last rnd, of shells, is as high as a round of double crochet.

Notes

- Child's sizes, by chest, waist and hip.
- Around the hips the bottom is from ½ in (1.5 cm) to 1½ in (4 cm) smaller than the body, by the size, and the top is from ½ in (1.5 cm) to 1½ in (4 cm) smaller than the chest; the fabric stretches to both. The waist casing is as wide as the hips of the bottom, and the elastic draws it in. No fit is promised beyond the measurements given.
- The turning chain (ch 1 for single crochet, ch 2 for double crochet) never counts as a stitch. Work the first stitch of every row into the first stitch, at the base of the turning chain.
- The ch that is skipped at the start of row 1 is never counted, and nothing is worked into it later.

For your own crochet, gifts and handmade pieces you sell. Do not resell or share this PDF or copies of it.

- The chain at the start of a round never counts as a stitch. Work the first stitch of the round into the stitch at its base, where the round was joined.
- A decrease counts as one stitch.
- The rounds are not turned; the right side always faces you. Left and right are those of the child who wears the set.
- Mattress stitch: lay the two edges side by side with the right side up; with the yarn needle go under two strands at the side of a row end of one edge, then under two strands of the row end across from it, and so on, and draw the yarn up until the edges meet.
- The top is put on from below: it is stepped into and drawn up over the hips. The straps are sewn down at both ends, and no cord or tie is at the neck.
- Lining: when the bottom is worked and before its side seams are sewn, lay the bottom flat with the wrong side up on stretch swimsuit lining, the greater stretch of the lining from side to side, and cut the lining ½ in (1.5 cm) larger all around. Turn ¾ in (2 cm) of it under all around, toward the crochet, and pin it to the wrong side, so that the fold lies about ¼ in (0.5 cm), which is one st or one row, in from every edge. Where an edge curves inward, snip the part that is turned under so that it lies flat. Sew the fold down with small slanting stitches of sewing thread that do not show on the right side, and stretch the piece a little as you sew. Without a lining the fabric shows what is under it.
- Cotton takes up water: wet, it grows heavier and longer and it dries slowly. A cotton with some elastic in it, whose label says that it is fit for swimwear, keeps its length better. Rinse out salt or chlorine and dry the piece flat, not hanging.
- Color changes in rows: work the last yarn over of the last stitch of the row before with the new yarn. Cut the old yarn, leaving an end of about 6 in (15 cm), or, if it is needed again at the same edge within 6 rows and that edge is straight, carry it loosely up the edge.
- Color changes in rounds: work the sl st that joins the round before with the new yarn. Cut the old yarn, leaving an end of about 6 in (15 cm), or, if it is needed again within 6 rnds, carry it loosely up the inside at the join.
- In back loop only: insert the hook under the loop of the stitch that is farther from you, and leave the nearer loop free.

Instructions

6 years, to fit chest 25 in (63.5 cm). US terms.

ch chain, **sl st** slip stitch, **sc** single crochet (UK double crochet), **dc** double crochet (UK treble), **Rnd** round, **st** stitch.
RS right side, the one that shows.
5 dc in next st: all in one stitch.
[ ] 32 times: work what is inside 32 times in all.
(96 sc): the stitches you have when the round is done. **How to read a pattern**.

Special stitches

sc2tog (single crochet 2 stitches together (UK double crochet 2 together)): Insert the hook in the next stitch and pull up a loop, insert the hook in the following stitch and pull up a loop (3 loops on the hook); yarn over and pull through all 3 loops.

For your own crochet, gifts and handmade pieces you sell. Do not resell or share this PDF or copies of it.

Band of the top

Yarn A, coral.

☐ **Foundation**	The band is worked from its lower edge up. The rounds begin at the left side and go over the front first to the right side, then over the back. With yarn A, ch 96; join with sl st in first ch to form a ring, taking care not to twist the chain. Colors: rnds 1 to 22 yarn A; rnds 23 to 25 yarn D.	
☐ **Rnd 1**	Ch 1; sc in each ch around; join with sl st in first sc	(96 sc)
☐ **Rnds 2 to 3**	Ch 1; sc in each st around; join with sl st in first sc	(96 sc)
	2 3	
☐ **Rnd 4**	Ch 1; sc in back loop only of each st around; join with sl st in first sc	(96 sc)
☐ **Rnds 5 to 22**	Ch 1; sc in each st around; join with sl st in first sc	(96 sc)
	5 6 7 8 9 10 11 12 13 14 15 16 17 18 19 20 21 22	
☐ **Rnd 23**	Ch 1; sc in back loop only of each st around; join with sl st in first sc	(96 sc)
☐ **Rnds 24 to 25**	Ch 1; sc in each st around; join with sl st in first sc	(96 sc)
	24 25	
☐ **End**	Fasten off. Of the 96 sts of rnd 25, sts 1 to 48 are the front and sts 49 to 96 are the back. Rnds 23 to 25 are the top edge.	

Flounce

Yarn A, coral.

☐ **Foundation**	Colors: rnd 1 yarn A; rnd 2 yarn D; rnd 3 yarn B; rnd 4 yarn D; rnd 5 yarn C; rnd 6 yarn D; rnd 7 yarn A; rnd 8 yarn D. Hold the band of the top with the right side facing and the foundation chain uppermost. The front loops of rnd 22 of the band of the top lie free below the top edge. Join yarn A in the free front loop of the first st of rnd 22; ch 2, 2 dc in the free front loop of each of the 96 sts of rnd 22, the first 2 dc in the loop where you joined (192 dc); join with sl st in first dc. This is rnd 1.	
☐ **Rnds 2 to 7**	Ch 2; dc in each st around; join with sl st in first dc	(192 dc)
	2 3 4 5 6 7	
☐ **Rnd 8**	Ch 1; **[**sc in next st, skip next 2 sts, 5 dc in next st, skip next 2 sts**] 32 times**; join with sl st in first sc	(32 sc, 160 dc)
☐ **End**	Fasten off. There are 32 shells at the edge. The flounce hangs down over the band from the line where it begins.	

Strap: make 2

Yarn C, aqua.

☐ **Foundation**	With yarn C, ch 7.	
☐ **Row 1 (RS)**	Sc in 2nd ch from hook and in each ch across	(6 sc)
☐ **Rows 2 to 58**	Ch 1, turn; sc in each st across	(6 sc)
	2 3 4 5 6 7 8 9 10 11 12 13 14 15 16 17 18 19 20 21 22 23 24 25 26 27 28 29 30 31 32 33 34 35 36 37 38 39 40 41 42 43 44 45 46 47 48 49 50 51 52 53 54 55 56 57	

For your own crochet, gifts and handmade pieces you sell. Do not resell or share this PDF or copies of it.

58

☐ **End**	Each strap comes to about 1½ in (3.8 cm) wide and 12½ in (32 cm) long (6 sts, 58 rows). Fasten off.	

Bottom

Yarn A, coral.

☐ **Foundation**	With yarn A, ch 50. Colors: rows 1 and 2 yarn A; rows 3 and 4 yarn D; rows 5 and 6 yarn B; rows 7 and 8 yarn D; rows 9 and 10 yarn C; rows 11 to 58 yarn A; rows 59 and 60 yarn C; rows 61 and 62 yarn D; rows 63 and 64 yarn B; rows 65 and 66 yarn D; rows 67 and 68 yarn A.	
☐ **Row 1 (RS)**	Sc in 2nd ch from hook and in each ch across	(49 sc)
☐ **Rows 2 to 13**	Ch 1, turn; sc in each st across	(49 sc)
	2 3 4 5 6 7 8 9 10 11 12 13	
☐ **Rows 14 to 19**	Ch 1, turn; sc2tog twice, sc in each st across to last 4 sts, sc2tog twice	(25 sc)
	14 15 16 17 18 19	
☐ **Rows 20 to 26**	Ch 1, turn; sc2tog, sc in each st across to last 2 sts, sc2tog	(11 sc)
	20 21 22 23 24 25 26	
☐ **Rows 27 to 36**	Ch 1, turn; sc in each st across	(11 sc)
	27 28 29 30 31 32 33 34 35 36	
☐ **Rows 37 to 55**	Ch 1, turn; 2 sc in first st, sc in each st across to last st, 2 sc in last st	(49 sc)
	37 38 39 40 41 42 43 44 45 46 47 48 49 50 51 52 53 54 55	
☐ **Rows 56 to 68**	Ch 1, turn; sc in each st across	(49 sc)
	56 57 58 59 60 61 62 63 64 65 66 67 68	
☐ **End**	Fasten off. Rows 1 to 13 are the sides of the front and rows 14 to 26 its legs, rows 27 to 36 are the crotch, rows 37 to 55 the legs of the back and rows 56 to 68 its sides. Line the bottom now (see NOTES), while it is flat: the lining as it is cut is about 13¼ in (33.5 cm) wide and 15¾ in (40 cm) long, measured at its widest and at its longest. Then the side seams: fold the bottom at the crotch with the right side outward, so that row 68 lies behind the foundation chain. At each side, with a new length of yarn A of about 10 in (25 cm), sew the ends of rows 1 to 13 to the ends of rows 68 to 56 with mattress stitch, row 1 to row 68, row 2 to row 67 and so on (13 row ends to 13). Rows 14 to 55 stay open for the legs.	

For your own crochet, gifts and handmade pieces you sell. Do not resell or share this PDF or copies of it.

Edging of the right leg, as worn

Yarn C, aqua.

☐ **Foundation**	Hold the bottom with the right side facing and the right leg opening, as worn, uppermost. Join yarn C in the end of row 14, the first row of the front past the side seam; ch 1 and go around the opening: along rows 14 to 19, 2 sc in the end of each of the next 6 rows (12 sc); along rows 20 to 26, [sc in the end of each of the next 2 rows, 2 sc in the end of the next row] twice, sc in the end of the next row (9 sc); along rows 27 to 36, sc in the end of each of the next 4 rows, skip the end of the next row, sc in the end of each of the next 5 rows (9 sc); along rows 37 to 55, [sc in the end of each of the next 2 rows, 2 sc in the end of the next row] 6 times, sc in the end of the next row (25 sc). There are 55 sc in all; join with sl st in first sc. This is rnd 1.	
☐ **Rnd 2**	Ch 1; sc in each st around; join with sl st in first sc	(55 sc)
☐ **Rnd 3**	Ch 1; sc in back loop only of each st around; join with sl st in first sc	(55 sc)
☐ **Rnd 4**	Ch 1; sc in each st around; join with sl st in first sc	(55 sc)
☐ **End**	Fasten off, leaving an end of about 38 in (95 cm) for sewing.	

Edging of the left leg, as worn

Yarn C, aqua.

☐ **Foundation**	Hold the bottom with the right side facing and the left leg opening, as worn, uppermost. Join yarn C in the end of row 55, the first row of the back past the side seam; ch 1 and go around the opening: along rows 37 to 55, met from the last of them, sc in the end of the next row, [2 sc in the end of the next row, sc in the end of each of the next 2 rows] 6 times (25 sc); along rows 27 to 36, met from the last of them, sc in the end of each of the next 5 rows, skip the end of the next row, sc in the end of each of the next 4 rows (9 sc); along rows 20 to 26, met from the last of them, sc in the end of the next row, [2 sc in the end of the next row, sc in the end of each of the next 2 rows] twice (9 sc); along rows 14 to 19, met from the last of them, 2 sc in the end of each of the next 6 rows (12 sc). There are 55 sc in all; join with sl st in first sc. This is rnd 1.	
☐ **Rnd 2**	Ch 1; sc in each st around; join with sl st in first sc	(55 sc)
☐ **Rnd 3**	Ch 1; sc in back loop only of each st around; join with sl st in first sc	(55 sc)
☐ **Rnd 4**	Ch 1; sc in each st around; join with sl st in first sc	(55 sc)
☐ **End**	Fasten off, leaving an end of about 38 in (95 cm) for sewing.	

Waist casing

Yarn D, white.

☐ **Foundation**	Hold the bottom with the right side facing and the waist edge uppermost. Join yarn D at the left side seam, as worn, in the first ch of the foundation chain, at the front; ch 1, sc in each of the 49 chs of the foundation chain along their free side, then sc in each of the 49 sts of row 68 (98 sc); join with sl st in first sc. This is rnd 1.	
☐ **Rnds 2 to 4** 2 3 4	Ch 1; sc in each st around; join with sl st in first sc	(98 sc)
☐ **Rnd 5**	Ch 1; sc in back loop only of each st around; join with sl st in first sc	(98 sc)

For your own crochet, gifts and handmade pieces you sell. Do not resell or share this PDF or copies of it.

☐ **Rnds 6 to 8** 6 7 8	Ch 1; sc in each st around; join with sl st in first sc	(98 sc)
☐ **End**	Fasten off, leaving an end of about 64 in (165 cm) for sewing.	

Assembly

1. Lower edge of the top: turn rnds 1 to 3 of the band to the inside along the ridge of rnd 4, and with a new length of yarn A of about 62 in (155 cm) sew the foundation chain to the back of rnd 6, 96 chs to 96 sts; leave the last 2 in (5 cm) open. Cut a piece of elastic ½ in (12 mm) wide and 24 in (61 cm) long, draw it through with a safety pin, lap its two ends 1 in (2.5 cm) and pin them: the elastic is then 23 in (58.5 cm) around, 2 in (5 cm) less than the chest. Try the top on and take the elastic in or let it out as you like; then sew its lapped ends together firmly with sewing thread and sew the rest of the casing shut.

2. Lining of the top: cut a strip of stretch swimsuit lining 25 in (63.5 cm) long and 4½ in (11.4 cm) deep, the greater stretch of the lining along its length. Sew its two short ends together with a seam of ½ in (1.5 cm), and turn ½ in (1.5 cm) of both long edges to the wrong side: the ring is then 24 in (61 cm) around and 3½ in (8.9 cm) deep. Slip it inside the band with its wrong side against the wrong side of the band and its seam at the left side. Pin its upper fold along the top of rnd 22, behind the line where the flounce begins, and its lower fold along the top of rnd 6, just above the casing. Sew both folds down all around with small slanting stitches of sewing thread that do not show outside, and stretch the fabric a little as you sew.

3. Straps: lay rows 1 to 3 of one strap on the wrong side of the top edge at the front, behind sts 11 to 16 of rnd 25, the foundation chain level with the top of rnd 22, and rows 1 to 3 of the other strap behind sts 33 to 38 in the same way. The strap behind sts 11 to 16 comes from the left half of the front: take it over the left shoulder and across the back to the right half of the back, and lay its last 3 rows behind sts 59 to 64 of rnd 25, its last row level with the top of rnd 22. Take the other strap over the right shoulder to the left half of the back, behind sts 81 to 86. The straps cross at the back and are not twisted. Pin them and try the top on; undo or add rows at the last row of a strap if it must be shorter or longer. Then sew each end of each strap, the 3 row ends of both its sides and its 6 chs or sts, to the top edge, with a new length of yarn C of about 12 in (30 cm) for each end, with small stitches that do not show on the right side. No end of a strap hangs free.

4. Legs: at each leg opening turn rnds 3 and 4 of the edging to the inside along the ridge of rnd 3, and sew the top of rnd 4 to the back of rnd 1, 55 sts to 55 sts, with the end of the edging; leave the last 2 in (5 cm) open. For each leg cut a piece of swimwear elastic ¼ in (6 mm) wide and 13½ in (34.5 cm) long, draw it through with a safety pin, lap its two ends 1 in (2.5 cm) and pin them: each elastic is then 12½ in (32 cm) around. Try the bottom on and take the elastic in or let it out as you like; then sew the lapped ends together firmly with sewing thread and sew the rest of the casing shut.

5. Waist of the bottom: turn rnds 5 to 8 of the casing to the inside along the ridge of rnd 5, and sew the top of rnd 8 to the back of rnd 1, 98 sts to 98 sts, with the end of the casing; leave the last 2 in (5 cm) open. Cut a piece of elastic ¾ in (2 cm) wide and 24 in (61 cm) long, draw it through with a safety pin, lap its two ends 1 in (2.5 cm) and pin them: the elastic is then 23 in (58.5 cm) around, 1½ in (4 cm) less than the casing. Try the bottom on and take the elastic in or let it out as you like; then sew its lapped ends together firmly with sewing thread and sew the rest of the casing shut.

Finishing

- Weave in all the ends. Wash as the yarn label says and lay flat to the measurements to dry.

In all: 3 pieces; 7,998 stitches (2,400 in the band of the top, 1,344 in the flounce, 348 in each strap, 2,542 in the bottom, 165 in the edging of the right leg, as worn, 165 in the edging of the left leg, as worn, 686 in the waist casing).

Found a mistake in this pattern? Tell us at flossfield.com, under Make a request.

For your own crochet, gifts and handmade pieces you sell. Do not resell or share this PDF or copies of it.