Girls' striped tank top

Size 6 · US terms



Finished size

About 27 in (68.5 cm) at the chest and about 14¾ in (37.5 cm) long

To fit a chest of 25 in (63.5 cm)

Skill

Easy

Basic stitches, simple shaping and seams.

Yarn

Light (3), 3 colors

Hook

4.5 mm (US 7)

Gauge

16 stitches and 13½ rows to 4 in (10 cm)

In half double crochet.

You will need

Yarn A: aqua, the main color	**about 250 yd (229 m), an estimate**
Yarn B: white, the second color	**about 160 yd (146 m), an estimate**
Yarn C: pink, the third color	**about 70 yd (64 m), an estimate**

Hook: 4.5 mm (US 7). Also: yarn needle, scissors, tape measure and stitch markers.

To find how many balls: divide by the length on your yarn's label and round up. The estimate is from the stitches of this size at this gauge.

Sizes

Size	To fit chest	Chest	Length	Armhole depth	Back neck	Yarn, an estimate
Size 2	21 in (53.5 cm)	23 in (58.5 cm)	13 in (33 cm)	4¾ in (12 cm)	7½ in (19 cm)	about 340 yd (311 m)
Size 4	23 in (58.5 cm)	25 in (63.5 cm)	14¼ in (36 cm)	5¼ in (13.5 cm)	7½ in (19 cm)	about 410 yd (374 m)
Size 6 (this file)	**25 in (63.5 cm)**	**27 in (68.5 cm)**	**14¾ in (37.5 cm)**	**5¼ in (13.5 cm)**	**8 in (20.5 cm)**	**about 480 yd (439 m)**
Size 8	26½ in (67.5 cm)	28 in (71 cm)	17¼ in (44 cm)	6 in (15 cm)	8 in (20.5 cm)	about 580 yd (530 m)
Size 10	28 in (71 cm)	30 in (76 cm)	18¼ in (46.5 cm)	6½ in (16.5 cm)	8½ in (21.5 cm)	about 650 yd (594 m)
Size 12	30 in (76 cm)	32 in (81.5 cm)	19½ in (49.5 cm)	7 in (18 cm)	8½ in (21.5 cm)	about 740 yd (676 m)
Size 14	31½ in (80 cm)	34 in (86.5 cm)	20¼ in (51.5 cm)	7¾ in (19.5 cm)	8½ in (21.5 cm)	about 800 yd (731 m)

For your own crochet, gifts and handmade pieces you sell. Do not resell or share this PDF.

Schematic

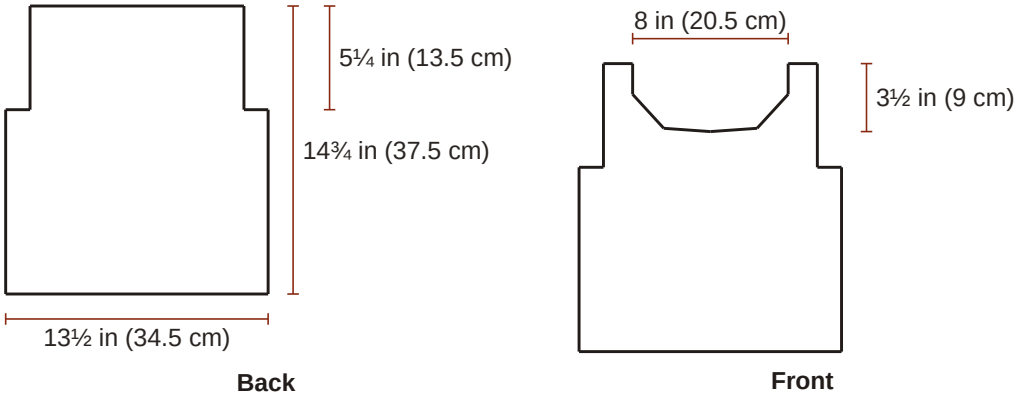

Abbreviations

Written in US terms. Where the UK name differs it is given beside the US one.

ch	chain
sl st	slip stitch (UK ss, slip stitch)
sc	single crochet (UK dc, double crochet)
hdc	half double crochet (UK htr, half treble)
st	stitch
rnd	round
RS	right side

Special stitches

hdc2tog (half double crochet 2 stitches together (UK half treble 2 together)): [Yarn over, insert the hook in the next stitch and pull up a loop] twice (5 loops on the hook); yarn over and pull through all 5 loops. It leaves 1 hdc2tog for the next row.

Gauge

16 stitches and 13½ rows to 4 in (10 cm) in half double crochet.

> **The swatch.** A test piece to measure and pull out. It is not the start of the pattern. Ch 25; begin in the 2nd ch from the hook and work 20 rows of half double crochet on 24 sts, about 6 in (15 cm) wide and 6 in (15 cm) high, and measure 4 in (10 cm) in the middle. Use a larger hook if your swatch is small, a smaller one if it is large.

Before you start

- Child's sizes.
- The finished chest is from 1½ in (4 cm) to 2½ in (6.5 cm) wider than the body measurement, by the size. Choose by the finished measurement you like; no fit is promised beyond the measurements given.
- The turning chain (ch 1 for single and half double crochet) never counts as a stitch. Work the first stitch of every row into the first stitch, at the base of the turning chain.
- The chain at the start of a round never counts as a stitch. Work the first stitch of the round into the stitch at its base, where the round was joined.

For your own crochet, gifts and handmade pieces you sell. Do not resell or share this PDF.

- Odd-numbered rows are right side rows. Mark the right side of each piece with a stitch marker or a scrap of yarn.
- A decrease counts as one stitch.
- Stitches worked evenly along row ends: about 6 sc in every 5 rows.
- Sew every seam with the yarn needle and yarn A.
- Color changes in rows: work the last yarn over of the last stitch of the row before with the new yarn. Cut the old yarn, leaving an end of about 6 in (15 cm), or, if it is needed again at the same edge within 6 rows and that edge is straight, carry it loosely up the edge.

Instructions

Chosen: Size 6. The count in round brackets at the end of a line is what that line leaves. Tick the box when a row is done. In UK terms sl st is slip stitch, sc is double crochet and hdc is half treble.

Back

Yarns in order of use: A, aqua; B, white; C, pink.

Colors, counted from row 1: 3 rows yarn A, 1 row yarn B, 1 row yarn C, 1 row yarn B; repeat these 6 rows to the end (the last repeat may stop part way).

☐ **Foundation**	With yarn A, ch 55.	
☐ **Row 1 (RS)**	Hdc in 2nd ch from hook and in each ch across	**(54 hdc)**
☐ **Rows 2 to 3**	Ch 1, turn; hdc in each st across	**(54 hdc)**

A box for each row, 2 to 3: tick them off as you go.

☐ 2 ☐ 3

☐ **Row 4**	**Yarn B.** Ch 1, turn; hdc in each st across	**(54 hdc)**
☐ **Row 5**	**Yarn C.** Ch 1, turn; hdc in each st across	**(54 hdc)**
☐ **Row 6**	**Yarn B.** Ch 1, turn; hdc in each st across	**(54 hdc)**
☐ **Rows 7 to 9**	**Yarn A.** Ch 1, turn; hdc in each st across	**(54 hdc)**

A box for each row, 7 to 9: tick them off as you go.

☐ 7 ☐ 8 ☐ 9

☐ **Row 10**	**Yarn B.** Ch 1, turn; hdc in each st across	**(54 hdc)**
☐ **Row 11**	**Yarn C.** Ch 1, turn; hdc in each st across	**(54 hdc)**
☐ **Row 12**	**Yarn B.** Ch 1, turn; hdc in each st across	**(54 hdc)**
☐ **Rows 13 to 15**	**Yarn A.** Ch 1, turn; hdc in each st across	**(54 hdc)**

A box for each row, 13 to 15: tick them off as you go.

☐ 13 ☐ 14 ☐ 15

☐ **Row 16**	**Yarn B.** Ch 1, turn; hdc in each st across	**(54 hdc)**
☐ **Row 17**	**Yarn C.** Ch 1, turn; hdc in each st across	**(54 hdc)**
☐ **Row 18**	**Yarn B.** Ch 1, turn; hdc in each st across	**(54 hdc)**

For your own crochet, gifts and handmade pieces you sell. Do not resell or share this PDF.

☐ **Rows 19 to 21**	**Yarn A.** Ch 1, turn; hdc in each st across	**(54 hdc)**

A box for each row, 19 to 21: tick them off as you go.

19 20 21

☐ **Row 22**	**Yarn B.** Ch 1, turn; hdc in each st across	**(54 hdc)**
☐ **Row 23**	**Yarn C.** Ch 1, turn; hdc in each st across	**(54 hdc)**
☐ **Row 24**	**Yarn B.** Ch 1, turn; hdc in each st across	**(54 hdc)**
☐ **Rows 25 to 27**	**Yarn A.** Ch 1, turn; hdc in each st across	**(54 hdc)**

A box for each row, 25 to 27: tick them off as you go.

25 26 27

☐ **Row 28**	**Yarn B.** Ch 1, turn; hdc in each st across	**(54 hdc)**
☐ **Row 29**	**Yarn C.** Ch 1, turn; hdc in each st across	**(54 hdc)**
☐ **Row 30**	**Yarn B.** Ch 1, turn; hdc in each st across	**(54 hdc)**
☐ **Rows 31 to 32**	**Yarn A.** Ch 1, turn; hdc in each st across	**(54 hdc)**

A box for each row, 31 to 32: tick them off as you go.

31 32

☐ **Row 33**	Fasten off and turn. Skip the first 5 sts and join yarn A in the next st; ch 1, and beginning in that st, hdc in next 44 sts, leave the last 5 sts unworked	**(44 hdc)**
☐ **Row 34**	**Yarn B.** Ch 1, turn; hdc in each st across	**(44 hdc)**
☐ **Row 35**	**Yarn C.** Ch 1, turn; hdc in each st across	**(44 hdc)**
☐ **Row 36**	**Yarn B.** Ch 1, turn; hdc in each st across	**(44 hdc)**
☐ **Rows 37 to 39**	**Yarn A.** Ch 1, turn; hdc in each st across	**(44 hdc)**

A box for each row, 37 to 39: tick them off as you go.

37 38 39

☐ **Row 40**	**Yarn B.** Ch 1, turn; hdc in each st across	**(44 hdc)**
☐ **Row 41**	**Yarn C.** Ch 1, turn; hdc in each st across	**(44 hdc)**
☐ **Row 42**	**Yarn B.** Ch 1, turn; hdc in each st across	**(44 hdc)**
☐ **Rows 43 to 45**	**Yarn A.** Ch 1, turn; hdc in each st across	**(44 hdc)**

A box for each row, 43 to 45: tick them off as you go.

43 44 45

☐ **Row 46**	**Yarn B.** Ch 1, turn; hdc in each st across	**(44 hdc)**
☐ **Row 47**	**Yarn C.** Ch 1, turn; hdc in each st across	**(44 hdc)**
☐ **Row 48**	**Yarn B.** Ch 1, turn; hdc in each st across	**(44 hdc)**

For your own crochet, gifts and handmade pieces you sell. Do not resell or share this PDF.

☐ **Rows 49 to 50**	**Yarn A.** Ch 1, turn; hdc in each st across	**(44 hdc)**

A box for each row, 49 to 50: tick them off as you go.

49 50

☐ **End**	The back measures about 13½ in (34.5 cm) wide and 14¾ in (37.5 cm) long, and 11 in (28 cm) across above the armholes. Fasten off.	

Front

Yarns in order of use: A, aqua; B, white; C, pink.

Colors, counted from row 1: 3 rows yarn A, 1 row yarn B, 1 row yarn C, 1 row yarn B; repeat these 6 rows to the end (the last repeat may stop part way).

☐ **Foundation**	With yarn A, ch 55.	
☐ **Row 1 (RS)**	Hdc in 2nd ch from hook and in each ch across	**(54 hdc)**
☐ **Rows 2 to 3**	Ch 1, turn; hdc in each st across	**(54 hdc)**

A box for each row, 2 to 3: tick them off as you go.

2 3

☐ **Row 4**	**Yarn B.** Ch 1, turn; hdc in each st across	**(54 hdc)**
☐ **Row 5**	**Yarn C.** Ch 1, turn; hdc in each st across	**(54 hdc)**
☐ **Row 6**	**Yarn B.** Ch 1, turn; hdc in each st across	**(54 hdc)**
☐ **Rows 7 to 9**	**Yarn A.** Ch 1, turn; hdc in each st across	**(54 hdc)**

A box for each row, 7 to 9: tick them off as you go.

7 8 9

☐ **Row 10**	**Yarn B.** Ch 1, turn; hdc in each st across	**(54 hdc)**
☐ **Row 11**	**Yarn C.** Ch 1, turn; hdc in each st across	**(54 hdc)**
☐ **Row 12**	**Yarn B.** Ch 1, turn; hdc in each st across	**(54 hdc)**
☐ **Rows 13 to 15**	**Yarn A.** Ch 1, turn; hdc in each st across	**(54 hdc)**

A box for each row, 13 to 15: tick them off as you go.

13 14 15

☐ **Row 16**	**Yarn B.** Ch 1, turn; hdc in each st across	**(54 hdc)**
☐ **Row 17**	**Yarn C.** Ch 1, turn; hdc in each st across	**(54 hdc)**
☐ **Row 18**	**Yarn B.** Ch 1, turn; hdc in each st across	**(54 hdc)**
☐ **Rows 19 to 21**	**Yarn A.** Ch 1, turn; hdc in each st across	**(54 hdc)**

A box for each row, 19 to 21: tick them off as you go.

19 20 21

☐ **Row 22**	**Yarn B.** Ch 1, turn; hdc in each st across	**(54 hdc)**
☐ **Row 23**	**Yarn C.** Ch 1, turn; hdc in each st across	**(54 hdc)**
☐ **Row 24**	**Yarn B.** Ch 1, turn; hdc in each st across	**(54 hdc)**

For your own crochet, gifts and handmade pieces you sell. Do not resell or share this PDF.

☐ **Rows 25 to 27**	**Yarn A.** Ch 1, turn; hdc in each st across	**(54 hdc)**

A box for each row, 25 to 27: tick them off as you go.

25 26 27

☐ **Row 28**	**Yarn B.** Ch 1, turn; hdc in each st across	**(54 hdc)**
☐ **Row 29**	**Yarn C.** Ch 1, turn; hdc in each st across	**(54 hdc)**
☐ **Row 30**	**Yarn B.** Ch 1, turn; hdc in each st across	**(54 hdc)**
☐ **Rows 31 to 32**	**Yarn A.** Ch 1, turn; hdc in each st across	**(54 hdc)**

A box for each row, 31 to 32: tick them off as you go.

31 32

☐ **Row 33**	Fasten off and turn. Skip the first 5 sts and join yarn A in the next st; ch 1, and beginning in that st, hdc in next 44 sts, leave the last 5 sts unworked	**(44 hdc)**
☐ **Row 34**	**Yarn B.** Ch 1, turn; hdc in each st across	**(44 hdc)**
☐ **Row 35**	**Yarn C.** Ch 1, turn; hdc in each st across	**(44 hdc)**
☐ **Row 36**	**Yarn B.** Ch 1, turn; hdc in each st across	**(44 hdc)**
☐ **Rows 37 to 38**	**Yarn A.** Ch 1, turn; hdc in each st across	**(44 hdc)**

A box for each row, 37 to 38: tick them off as you go.

37 38

☐ **End**	Do not fasten off.	

Front, first side of the neck

Yarns in order of use: A, aqua; B, white; C, pink.

Colors, counted from row 39: 1 row yarn A, 1 row yarn B, 1 row yarn C, 1 row yarn B, 2 rows yarn A; repeat these 6 rows to the end (the last repeat may stop part way).

☐ **Foundation**	Go on from row 38 of the front. This is the left side as worn. The neck edge is at the end of the next row.	
☐ **Row 39**	Ch 1, turn; hdc in next 15 sts, leave the last 29 sts unworked	**(15 hdc)**
☐ **Row 40**	**Yarn B.** Ch 1, turn; hdc2tog, hdc in each st across	**(14 hdc)**
☐ **Row 41**	**Yarn C.** Ch 1, turn; hdc in each st across to last 2 sts, hdc2tog	**(13 hdc)**
☐ **Row 42**	**Yarn B.** Ch 1, turn; hdc2tog, hdc in each st across	**(12 hdc)**
☐ **Row 43**	**Yarn A.** Ch 1, turn; hdc in each st across to last 2 sts, hdc2tog	**(11 hdc)**
☐ **Row 44**	Ch 1, turn; hdc2tog, hdc in each st across	**(10 hdc)**
☐ **Row 45**	Ch 1, turn; hdc in each st across to last 2 sts, hdc2tog	**(9 hdc)**
☐ **Row 46**	**Yarn B.** Ch 1, turn; hdc2tog, hdc in each st across	**(8 hdc)**
☐ **Row 47**	**Yarn C.** Ch 1, turn; hdc in each st across to last 2 sts, hdc2tog	**(7 hdc)**
☐ **Row 48**	**Yarn B.** Ch 1, turn; hdc2tog, hdc in each st across	**(6 hdc)**

For your own crochet, gifts and handmade pieces you sell. Do not resell or share this PDF.

☐ **Rows 49 to 50**	**Yarn A.** Ch 1, turn; hdc in each st across	**(6 hdc)**

A box for each row, 49 to 50: tick them off as you go.

49 50

☐ **End**	The 6 sts left are the shoulder. Fasten off.	

Front, second side of the neck

Yarns in order of use: A, aqua; B, white; C, pink.

Colors, counted from row 39: 1 row yarn A, 1 row yarn B, 1 row yarn C, 1 row yarn B, 2 rows yarn A; repeat these 6 rows to the end (the last repeat may stop part way).

☐ **Foundation**	Go back to row 38 of the front, with the same side facing you as for row 39 of the first side. Skip the next 14 unworked sts of row 38 for the neck and join yarn A in the next st. This is the right side as worn. The first st of row 39 goes in the joining st. The neck edge is at the beginning of that row.	
☐ **Row 39**	Ch 1; hdc in each st across	**(15 hdc)**
☐ **Row 40**	**Yarn B.** Ch 1, turn; hdc in each st across to last 2 sts, hdc2tog	**(14 hdc)**
☐ **Row 41**	**Yarn C.** Ch 1, turn; hdc2tog, hdc in each st across	**(13 hdc)**
☐ **Row 42**	**Yarn B.** Ch 1, turn; hdc in each st across to last 2 sts, hdc2tog	**(12 hdc)**
☐ **Row 43**	**Yarn A.** Ch 1, turn; hdc2tog, hdc in each st across	**(11 hdc)**
☐ **Row 44**	Ch 1, turn; hdc in each st across to last 2 sts, hdc2tog	**(10 hdc)**
☐ **Row 45**	Ch 1, turn; hdc2tog, hdc in each st across	**(9 hdc)**
☐ **Row 46**	**Yarn B.** Ch 1, turn; hdc in each st across to last 2 sts, hdc2tog	**(8 hdc)**
☐ **Row 47**	**Yarn C.** Ch 1, turn; hdc2tog, hdc in each st across	**(7 hdc)**
☐ **Row 48**	**Yarn B.** Ch 1, turn; hdc in each st across to last 2 sts, hdc2tog	**(6 hdc)**
☐ **Rows 49 to 50**	**Yarn A.** Ch 1, turn; hdc in each st across	**(6 hdc)**

A box for each row, 49 to 50: tick them off as you go.

49 50

☐ **End**	The 6 sts left are the shoulder. Fasten off.	

Neckband

Yarn B, white.

Work this at step 2 under Assembly.

☐ **Foundation**	With the right side facing, join yarn B at the right shoulder seam (as worn).	
☐ **Rnd 1**	Ch 1, sc in each of the 32 open sts of the back neck, 14 sc evenly along the 12 row ends down the left side of the neck, sc in each of the 14 sts left at the front, 14 sc evenly along the 12 row ends up the right side; join with sl st in first sc	**(74 sc)**
☐ **Rnd 2**	Ch 1; sc in each st around; join with sl st in first sc	**(74 sc)**
☐ **End**	Fasten off.	

For your own crochet, gifts and handmade pieces you sell. Do not resell or share this PDF.

Armhole edging: make 2

Yarn B, white.

Work this at step 4 under Assembly.

☐ **Foundation**	With the right side facing, join yarn B at the middle of the underarm.	
☐ **Rnd 1**	Ch 1, sc in each of the first 5 sts, 21 sc evenly along the 18 row ends up to the shoulder seam, 21 sc evenly along the 18 row ends down the other side, sc in each of the last 5 sts; join with sl st in first sc	**(52 sc)**
☐ **Rnd 2**	Ch 1; sc in each st around; join with sl st in first sc	**(52 sc)**
☐ **End**	Fasten off.	

Assembly

1. Shoulders: lay the front on the back with right sides together. Sew the 6 sts at each end of the top edge together, and leave the middle 32 sts of the back open for the neck.

2. Neckband: work it now, as written above.

3. Sides: sew each side seam from the underarm down to the hem.

4. Armhole edging: work it now, as written above.

Finishing

- Weave in all the ends. Wash as the yarn label says and lay flat to the measurements to dry.

In all: 7 pieces; 5,102 stitches (2,520 in the back, 1,992 in the front, 117 in the front, first side of the neck, 117 in the front, second side of the neck, 148 in the neckband, 104 in each armhole edging); 156 ends to weave in.

Found a mistake in this pattern? Tell us at flossfield.com, under Make a request.

For your own crochet, gifts and handmade pieces you sell. Do not resell or share this PDF.