Girls' striped raglan cardigan

Size 6 · US terms



Finished size
About 29 in (73.5 cm) at the chest and about 16 in (40.5 cm) long
To fit a chest of 25 in (63.5 cm)

Skill
Easy
Double crochet from the neck down in one piece, with simple increases, a post stitch rib and plain bands.

Yarn
Light (3), 3 colors

Hook
4.5 mm (US 7)

Gauge
16 stitches and 8½ rows to 4 in (10 cm)
In double crochet.

You will need

Yarn A: coral, the wide stripes, the ribs and the bands	**about 350 yd (320 m), an estimate**
Yarn B: cream, thin stripes	**about 165 yd (151 m), an estimate**
Yarn C: aqua, thin stripes	**about 85 yd (78 m), an estimate**

Hook: 4.5 mm (US 7). Also: yarn needle, scissors, tape measure and 4 buttons, 5/8 in (15 mm) across.

To find how many balls: divide by the length on your yarn's label and round up. The estimate is from the stitches of this size at this gauge.

Sizes

Size	To fit chest	Chest	Length	Yoke depth	Sleeve	Upper sleeve	Neck	Yarn, an estimate
Size 2	21 in (53.5 cm)	25 in (63.5 cm)	13¾ in (35 cm)	5¼ in (13.5 cm)	9 in (23 cm)	9 in (23 cm)	16 in (40.5 cm)	about 465 yd (425 m)
Size 4	23 in (58.5 cm)	27 in (68.5 cm)	14½ in (37 cm)	5¾ in (14.5 cm)	10¾ in (27.5 cm)	9½ in (24 cm)	16 in (40.5 cm)	about 530 yd (484 m)
Size 6 (this file)	**25 in (63.5 cm)**	**29 in (73.5 cm)**	**16 in (40.5 cm)**	**6 in (15 cm)**	**11¾ in (30 cm)**	**10 in (25.5 cm)**	**16 in (40.5 cm)**	**about 600 yd (549 m)**
Size 8	26½ in (67.5 cm)	31 in (78.5 cm)	18 in (45.5 cm)	6½ in (16.5 cm)	12¾ in (32.5 cm)	10½ in (26.5 cm)	16 in (40.5 cm)	about 690 yd (631 m)
Size 10	28 in (71 cm)	32 in (81.5 cm)	19¼ in (49 cm)	7 in (18 cm)	13¾ in (35 cm)	10½ in (26.5 cm)	16 in (40.5 cm)	about 780 yd (713 m)

For your own crochet, gifts and handmade pieces you sell. Do not resell or share this PDF.

Size 12	30 in (76 cm)	34 in (86.5 cm)	20¼ in (51.5 cm)	7½ in (19 cm)	15 in (38 cm)	11 in (28 cm)	16 in (40.5 cm)	about 865 yd (791 m)
Size 14	31½ in (80 cm)	35 in (89 cm)	20¾ in (52.5 cm)	8 in (20.5 cm)	16½ in (42 cm)	11½ in (29 cm)	16 in (40.5 cm)	about 950 yd (868 m)

Schematic

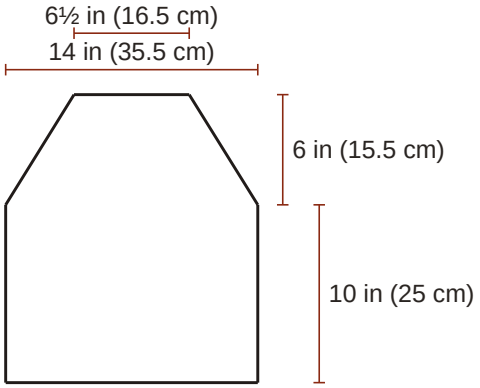

Body, laid flat

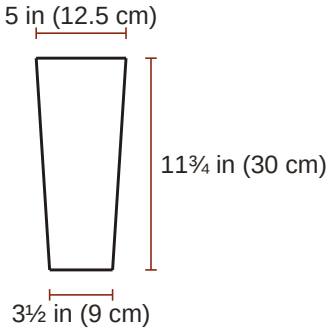

Sleeve, laid flat

Abbreviations

Written in US terms. Where the UK name differs it is given beside the US one.

ch	chain
sl st	slip stitch (UK ss, slip stitch)
sc	single crochet (UK dc, double crochet)
dc	double crochet (UK tr, treble)
sp	space
st	stitch
rnd	round
RS	right side
WS	wrong side

Special stitches

dc2tog (double crochet 2 stitches together (UK treble 2 together)): [Yarn over, insert the hook in the next stitch and pull up a loop, yarn over and pull through 2 loops] twice (3 loops on the hook); yarn over and pull through all 3 loops. It leaves 1 dc2tog for the next row.

fpdc (front post double crochet (UK front post treble)): Yarn over, insert the hook from the front to the back and to the front again around the post of the stitch named, pull up a loop, [yarn over and pull through 2 loops] twice. The front is the side that faces you. A post stitch takes the place of the stitch it is worked around: do not work into the top of that stitch as well. It leaves 1 fpdc for the next row.

bpdc (back post double crochet (UK back post treble)): As fpdc, but insert the hook from the back to the front and to the back again around the post. It leaves 1 bpdc for the next row.

For your own crochet, gifts and handmade pieces you sell. Do not resell or share this PDF.

Gauge

16 stitches and 8½ rows to 4 in (10 cm) in double crochet.

> **The swatch.** A test piece to measure and pull out. It is not the start of the pattern. Ch 26; work 13 rows of double crochet on 24 sts, about 6 in (15 cm) wide and 6 in (15 cm) high, and measure 4 in (10 cm) in the middle. Use a larger hook if your swatch is small, a smaller one if it is large.

Before you start

- Child's sizes, 2 to 14.
- The finished chest is from 3½ in (9 cm) to 4½ in (11.5 cm) wider than the body measurement, by the size. Choose by the finished measurement you like; no fit is promised beyond the measurements given.
- Worked from the neck down in one piece. The yoke and body are worked back and forth in rows; row 1 is a right side row. The sleeves are worked in rounds.
- The chain at the start of a round or row (ch 1 for single crochet, ch 2 for double crochet) never counts as a stitch. Work the first stitch into the stitch at its base.
- A ch-1 sp marks each of the four raglan lines. The ch-1 sps are counted apart from the stitches.
- A decrease counts as one stitch.
- At the underarms, work into each of the new chains as into a stitch on the next row. The sleeves are worked into the free side of these chains.
- Stitches worked evenly along row ends: about 15 sc in every 8 rows.
- For the rib, always work around the post (the upright part) of the stitch below, not into its top.
- Color changes in rows: work the last yarn over of the last stitch of the row before with the new yarn. Cut the old yarn, leaving an end of about 6 in (15 cm), or, if it is needed again at the same edge within 6 rows, carry it loosely up that edge.
- Color changes in rounds: work the sl st that joins the round before with the new yarn. Cut the old yarn, leaving an end of about 6 in (15 cm), or, if it is needed again within 6 rnds, carry it loosely up the inside at the join.

Instructions

Chosen: Size 6. Square brackets [ ] hold a repeat: work what is inside as many times as it says. Round brackets ( ) inside a line hold stitches that all go into one place. The count in round brackets at the end of a line is what that line leaves. Tick the box when a row is done. In UK terms sl st is slip stitch, sc is double crochet and dc is treble.

Yoke

Yarns in order of use: A, coral; B, cream; C, aqua.

Colors, counted from row 1: 3 rows yarn A, 1 row yarn B, 1 row yarn C, 1 row yarn B; repeat these 6 rows to the end (the last repeat may stop part way).

☐ **Foundation**	With yarn A, ch 66.	
☐ **Row 1 (RS)**	Dc in 3rd ch from hook and in each ch across	**(64 dc)**
☐ **Row 2 (WS)**	Ch 2, turn; dc in next 11 sts, ch 1, dc in next 10 sts, ch 1, dc in next 22 sts, ch 1, dc in next 10 sts, ch 1, dc in next 11 sts	**(64 dc, 4 ch-1 sps)**
☐ **Row 3**	Ch 2, turn; [dc in each st to next ch-1 sp, (2 dc, ch 1, dc) in next ch-1 sp, dc in each st to next ch-1 sp, (dc, ch 1, 2 dc) in next ch-1 sp] twice, dc in each st across	**(76 dc, 4 ch-1 sps)**

For your own crochet, gifts and handmade pieces you sell. Do not resell or share this PDF.

☐ **Row 4**	**Yarn B.** Ch 2, turn; **[**dc in each st to next ch-1 sp, (dc, ch 1, dc) in next ch-1 sp**] 4 times**, dc in each st across	**(84 dc, 4 ch-1 sps)**
☐ **Row 5**	**Yarn C.** Ch 2, turn; **[**dc in each st to next ch-1 sp, (dc, ch 1, dc) in next ch-1 sp**] 4 times**, dc in each st across	**(92 dc, 4 ch-1 sps)**
☐ **Row 6**	**Yarn B.** Ch 2, turn; **[**dc in each st to next ch-1 sp, (dc, ch 1, dc) in next ch-1 sp**] 4 times**, dc in each st across	**(100 dc, 4 ch-1 sps)**
☐ **Row 7**	**Yarn A.** Ch 2, turn; **[**dc in each st to next ch-1 sp, (dc, ch 1, dc) in next ch-1 sp**] 4 times**, dc in each st across	**(108 dc, 4 ch-1 sps)**
☐ **Row 8**	Ch 2, turn; [dc in each st to next ch-1 sp, (2 dc, ch 1, dc) in next ch-1 sp, dc in each st to next ch-1 sp, (dc, ch 1, 2 dc) in next ch-1 sp] twice, dc in each st across	**(120 dc, 4 ch-1 sps)**
☐ **Row 9**	Ch 2, turn; **[**dc in each st to next ch-1 sp, (dc, ch 1, dc) in next ch-1 sp**] 4 times**, dc in each st across	**(128 dc, 4 ch-1 sps)**
☐ **Row 10**	**Yarn B.** Ch 2, turn; **[**dc in each st to next ch-1 sp, (dc, ch 1, dc) in next ch-1 sp**] 4 times**, dc in each st across	**(136 dc, 4 ch-1 sps)**
☐ **Row 11**	**Yarn C.** Ch 2, turn; **[**dc in each st to next ch-1 sp, (dc, ch 1, dc) in next ch-1 sp**] 4 times**, dc in each st across	**(144 dc, 4 ch-1 sps)**
☐ **Row 12**	**Yarn B.** Ch 2, turn; **[**dc in each st to next ch-1 sp, (dc, ch 1, dc) in next ch-1 sp**] 4 times**, dc in each st across	**(152 dc, 4 ch-1 sps)**
☐ **Row 13**	**Yarn A.** Ch 2, turn; [dc in each st to next ch-1 sp, (2 dc, ch 1, dc) in next ch-1 sp, dc in each st to next ch-1 sp, (dc, ch 1, 2 dc) in next ch-1 sp] twice, dc in each st across	**(164 dc, 4 ch-1 sps)**
☐ **End**	Do not fasten off.	

Body

Yarns in order of use: A, coral; B, cream; C, aqua.

Colors, counted from row 14: 2 rows yarn A, 1 row yarn B, 1 row yarn C, 1 row yarn B, 1 row yarn A; repeat these 6 rows to row 30; rows 31 to 34 yarn A.

☐ **Foundation**	Go on from row 13 of the yoke.	
☐ **Row 14**	Ch 2, turn; dc in each st to next ch-1 sp, ch 6 (underarm), skip next ch-1 sp, next 32 sts and next ch-1 sp (one sleeve), dc in each st to next ch-1 sp, ch 6 (underarm), skip next ch-1 sp, next 32 sts and next ch-1 sp (one sleeve), dc in each st across	**(100 dc, 12 ch)**
☐ **Row 15**	Ch 2, turn; dc in each st across	**(112 dc)**
☐ **Row 16**	**Yarn B.** Ch 2, turn; dc in each st across	**(112 dc)**
☐ **Row 17**	**Yarn C.** Ch 2, turn; dc in each st across	**(112 dc)**
☐ **Row 18**	**Yarn B.** Ch 2, turn; dc in each st across	**(112 dc)**
☐ **Rows 19 to 21**	**Yarn A.** Ch 2, turn; dc in each st across	**(112 dc)**

A box for each row, 19 to 21: tick them off as you go.

19 20 21

For your own crochet, gifts and handmade pieces you sell. Do not resell or share this PDF.

☐ **Row 22**	**Yarn B.** Ch 2, turn; dc in each st across	**(112 dc)**
☐ **Row 23**	**Yarn C.** Ch 2, turn; dc in each st across	**(112 dc)**
☐ **Row 24**	**Yarn B.** Ch 2, turn; dc in each st across	**(112 dc)**
☐ **Rows 25 to 27**	**Yarn A.** Ch 2, turn; dc in each st across	**(112 dc)**

A box for each row, 25 to 27: tick them off as you go.

25 26 27

☐ **Row 28**	**Yarn B.** Ch 2, turn; dc in each st across	**(112 dc)**
☐ **Row 29**	**Yarn C.** Ch 2, turn; dc in each st across	**(112 dc)**
☐ **Row 30**	**Yarn B.** Ch 2, turn; dc in each st across	**(112 dc)**
☐ **Row 31**	**Yarn A.** Ch 2, turn; dc in each st across	**(112 dc)**
☐ **Rows 32 to 34**	Ch 2, turn; **[**fpdc around next st, bpdc around next st**] 56 times**	**(56 fpdcs, 56 bpdcs)**

A box for each row, 32 to 34: tick them off as you go.

32 33 34

☐ **End**	Fasten off.	

Sleeve: make 2

Yarns in order of use: A, coral; B, cream; C, aqua.

Colors, counted from rnd 1: 2 rnds yarn A, 1 rnd yarn B, 1 rnd yarn C, 1 rnd yarn B, 1 rnd yarn A; repeat these 6 rnds to rnd 22; rnds 23 to 25 yarn A.

☐ **Foundation**	With the right side facing, join yarn A in the middle of one underarm.	
☐ **Rnd 1**	Ch 2, dc in each of the first 3 underarm chs, dc in the ch-1 sp, dc in each of the 32 sleeve sts, dc in the next ch-1 sp and dc in each of the last 3 underarm chs; join with sl st in first dc	**(40 dc)**
☐ **Rnd 2**	Ch 2; dc in each st around; join with sl st in first dc	**(40 dc)**
☐ **Rnd 3**	**Yarn B.** Ch 2; dc2tog, dc in each st around to last 2 sts, dc2tog; join with sl st in first dc2tog	**(38 dc)**
☐ **Rnd 4**	**Yarn C.** Ch 2; dc in each st around; join with sl st in first dc	**(38 dc)**
☐ **Rnd 5**	**Yarn B.** Ch 2; dc in each st around; join with sl st in first dc	**(38 dc)**
☐ **Rnd 6**	**Yarn A.** Ch 2; dc2tog, dc in each st around to last 2 sts, dc2tog; join with sl st in first dc2tog	**(36 dc)**
☐ **Rnd 7**	Ch 2; dc in each st around; join with sl st in first dc	**(36 dc)**
☐ **Rnd 8**	Ch 2; dc in each st around; join with sl st in first dc	**(36 dc)**
☐ **Rnd 9**	**Yarn B.** Ch 2; dc2tog, dc in each st around to last 2 sts, dc2tog; join with sl st in first dc2tog	**(34 dc)**
☐ **Rnd 10**	**Yarn C.** Ch 2; dc in each st around; join with sl st in first dc	**(34 dc)**
☐ **Rnd 11**	**Yarn B.** Ch 2; dc in each st around; join with sl st in first dc	**(34 dc)**
☐ **Rnd 12**	**Yarn A.** Ch 2; dc2tog, dc in each st around to last 2 sts, dc2tog; join with sl st in first dc2tog	**(32 dc)**

For your own crochet, gifts and handmade pieces you sell. Do not resell or share this PDF.

☐ **Rnd 13**	Ch 2; dc in each st around; join with sl st in first dc	**(32 dc)**
☐ **Rnd 14**	Ch 2; dc in each st around; join with sl st in first dc	**(32 dc)**
☐ **Rnd 15**	**Yarn B.** Ch 2; dc2tog, dc in each st around to last 2 sts, dc2tog; join with sl st in first dc2tog	**(30 dc)**
☐ **Rnd 16**	**Yarn C.** Ch 2; dc in each st around; join with sl st in first dc	**(30 dc)**
☐ **Rnd 17**	**Yarn B.** Ch 2; dc in each st around; join with sl st in first dc	**(30 dc)**
☐ **Rnd 18**	**Yarn A.** Ch 2; dc2tog, dc in each st around to last 2 sts, dc2tog; join with sl st in first dc2tog	**(28 dc)**
☐ **Rnd 19**	Ch 2; dc in each st around; join with sl st in first dc	**(28 dc)**
☐ **Rnd 20**	Ch 2; dc in each st around; join with sl st in first dc	**(28 dc)**
☐ **Rnd 21**	**Yarn B.** Ch 2; dc in each st around; join with sl st in first dc	**(28 dc)**
☐ **Rnd 22**	**Yarn C.** Ch 2; dc in each st around; join with sl st in first dc	**(28 dc)**
☐ **Rnds 23 to 25**	**Yarn A.** Ch 2; **[**fpdc around next st, bpdc around next st**] 14 times**; join with sl st in first fpdc	**(14 fpdcs, 14 bpdcs)**

A box for each round, 23 to 25: tick them off as you go.

23 24 25

☐ **End**	Fasten off.	

Neckband

Yarn A, coral.

☐ **Foundation**	With the right side facing, join yarn A in the end of the foundation chain at the right front.	
☐ **Row 1 (RS)**	Ch 1, sc in each ch across	**(64 sc)**
☐ **Rows 2 to 3**	Ch 1, turn; sc in each st across	**(64 sc)**

A box for each row, 2 to 3: tick them off as you go.

2 3

☐ **End**	Fasten off.	

Button band

Yarn A, coral.

☐ **Foundation**	With the right side facing, join yarn A at the neck end of the left front edge (as worn).	
☐ **Row 1 (RS)**	Ch 1, sc in the end of each of the 3 neckband rows and 64 sc evenly down the 34 row ends of the front	**(67 sc)**
☐ **Rows 2 to 5**	Ch 1, turn; sc in each st across	**(67 sc)**

A box for each row, 2 to 5: tick them off as you go.

2 3 4 5

☐ **End**	Fasten off.	

For your own crochet, gifts and handmade pieces you sell. Do not resell or share this PDF.

Buttonhole band

Yarn A, coral.

☐ **Foundation**	With the right side facing, join yarn A at the hem of the right front edge (as worn).
☐ **Row 1 (RS)**	Ch 1, 64 sc evenly up the 34 row ends of the front and sc in the end of each of the 3 neckband rows **(67 sc)**
☐ **Row 2**	Ch 1, turn; sc in each st across **(67 sc)**
☐ **Row 3**	Ch 1, turn; sc in next 2 sts, **[**ch 2, skip next 2 sts, sc in next 18 sts**] 3 times**, ch 2, skip next 2 sts, sc in next 3 sts **(59 sc, 4 ch-2 sps)**
☐ **Row 4**	Ch 1, turn; sc in next 3 sts, **[**2 sc in next ch-2 sp, sc in next 18 sts**] 3 times**, 2 sc in next ch-2 sp, sc in next 2 sts **(67 sc)**
☐ **Row 5**	Ch 1, turn; sc in each st across **(67 sc)**
☐ **End**	Fasten off.

Putting it together

Close any small gaps at the underarms with the yarn ends there. Sew the buttons to the button band opposite the buttonholes.

Finishing

- Weave in all the ends. Wash as the yarn label says and lay flat to the measurements to dry.

In all: 7 pieces; 60 ends to weave in.

Found a mistake in this pattern? Tell us at flossfield.com, under Make a request.

For your own crochet, gifts and handmade pieces you sell. Do not resell or share this PDF.