Granny square poncho

M to L · US terms



Finished size

Squares of about 4¼ in (10.8 cm) and about 22 in (56 cm) at the neck

Skill

Easy

Basic stitches, squares and half squares joined with a whip stitch

Yarn

Light (3), 5 colors

Hook

4.5 mm (US 7)

Gauge

16 stitches and 8½ rows to 4 in (10 cm)

In double crochet.

You will need

Yarn A: charcoal, main	**about 900 yd (823 m), an estimate**
Yarn B: gold, contrast	**about 190 yd (174 m), an estimate**
Yarn C: coral, color 3	**about 150 yd (137 m), an estimate**
Yarn D: turquoise, color 4	**about 140 yd (128 m), an estimate**
Yarn E: fuchsia, color 5	**about 100 yd (91 m), an estimate**

Hook: 4.5 mm (US 7), or the size that gives you the gauge. Also: yarn needle, scissors and tape measure.

To find how many balls: divide by the length on your yarn's label and round up. Buy them from one dye lot. The estimate is from the stitches of this size at this gauge.

Sizes

Size	Each square	Neck	Depth at the side	Depth at the middle of the	Neck rib, high	Yarn, an estimate
XS to S	3¾ in (9.5 cm)	21 in (53.5 cm)	15 in (38 cm)	26½ in (67.5 cm)	2¾ in (7 cm)	about 1,290 yd (1,180 m)
M to L (this file)	**4¼ in (11 cm)**	**22 in (56 cm)**	**17 in (43 cm)**	**30 in (76 cm)**	**2¾ in (7 cm)**	**about 1,480 yd (1,353 m)**
1X to 2X	4¾ in (12 cm)	23 in (58.5 cm)	19 in (48.5 cm)	33½ in (85 cm)	2¾ in (7 cm)	about 1,830 yd (1,673 m)
3X to 5X	5¼ in (13.5 cm)	24 in (61 cm)	21 in (53.5 cm)	37 in (94 cm)	2¾ in (7 cm)	about 2,030 yd (1,856 m)

For your own crochet, gifts and handmade pieces you sell. Do not resell or share this PDF or copies of it.

Schematic

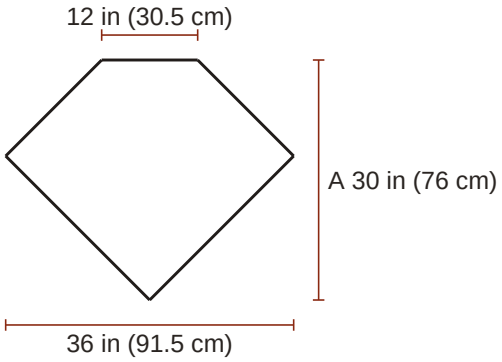

Front
A how deep the neck is

Abbreviations

Written in US terms. Where the UK name differs it is given beside the US one.

sl st	slip stitch (UK ss, slip stitch)
dc	double crochet (UK tr, treble)
sc	single crochet (UK dc, double crochet)
ch	chain stitch
RS	right side
Rnd	round
st	stitch
sp	space

Special stitches

sc2tog (single crochet 2 stitches together (UK double crochet 2 together)): Insert the hook in the next stitch and pull up a loop, insert the hook in the following stitch and pull up a loop (3 loops on the hook); yarn over and pull through all 3 loops. It leaves 1 sc2tog for the next row or round.

fpdc (front post double crochet (UK front post treble)): Yarn over, insert the hook from the front to the back and to the front again around the post of the stitch named, pull up a loop, [yarn over and pull through 2 loops] twice. The front is the side that faces you. A post stitch takes the place of the stitch it is worked around: do not work into the top of that stitch as well. It leaves 1 fpdc for the next row or round.

bpdc (back post double crochet (UK back post treble)): As fpdc, but insert the hook from the back to the front and to the back again around the post. It leaves 1 bpdc for the next row or round.

Gauge

16 stitches and 8½ rows to 4 in (10 cm) in double crochet.

> **The swatch.** A test piece to measure and pull out. It is not the start of the pattern. Ch 26; begin in the 3rd ch from the hook and work 13 rows of double crochet on 24 sts, about 6 in (15 cm) wide and 6 in (15 cm) high, and measure 4 in (10 cm) in the middle. Use a larger hook if your swatch is small, a smaller one if it is large. A square measures what the size list says after its last round. Measure the first one before you go on; change the hook if it is larger or smaller. The short edges of a half square are as long as the side of a square. Single crochet (UK: double crochet) rounds: about 18.5 rounds to 4 in (10 cm). Rib: the same stitches and rounds to 4 in (10 cm) as double crochet, and it stretches.

For your own crochet, gifts and handmade pieces you sell. Do not resell or share this PDF or copies of it.

Before you start

- Women's sizes, in four ranges. They differ in the size of the squares.
- A poncho hangs free. Choose by the bust, or by the depth you like; no fit is promised beyond the measurements given.
- The rounds are not turned; the right side always faces you. The half squares are turned at the end of each row.
- The chain at the start of a round or row (ch 1 for single crochet, ch 2 for double crochet) never counts as a stitch. From rnd 2 of a square the rounds of 3 dc groups begin in a corner space: the first 3 dc go in the same space as the ch 2. In a round of single crochet or of plain double crochet, and in every row, the first stitch goes in the stitch at the base of the chain (in a round this is the first stitch of the round before, the one into which it was joined). In a round of post stitches the first fpdc goes around the post of that same stitch. In the first round of a piece worked along an edge the first stitch goes in the place where the yarn was joined.
- A decrease counts as one stitch.
- To work into the end of a row, insert the hook under two threads at the side of its edge stitch or of its turning chain.
- In the rib work fpdc around each fpdc and bpdc around each bpdc of the round below; in the first rib round work them in turn around the dc.
- The neck has no opening and goes on over the head; the rib stretches.
- Color changes in rows: work the last yarn over of the last stitch of the row before with the new yarn. Cut the old yarn, leaving an end of about 6 in (15 cm), or, if it is needed again at the same edge within 6 rows and that edge is straight, carry it loosely up the edge.
- Whip stitch: hold the two edges together, put the needle through both from back to front, bring the yarn over the edges and go in again from the back, one stitch along.
- To fit bust 37 to 41 in (94 to 104 cm).
- Each square 4¼ in (10.8 cm).
- Depth at the side, from the neck edge straight down to the lower edge, without the rib and the fringe 17 in (43 cm).
- Depth at the middle of the front, from the neck edge to the point, without the rib and the fringe, about 30 in (76 cm).

Instructions

Chosen: M to L. Square brackets [ ] hold a repeat: work what is inside as many times as it says. Round brackets ( ) inside a line hold stitches that all go into one place. The count in round brackets at the end of a line is what that line leaves. Tick the box when a round is done. In UK terms sl st is slip stitch, dc is treble and sc is double crochet.

Square one: make 22

Yarns in order of use: B, gold; C, coral; D, turquoise; A, charcoal.

☐ **Foundation**	With yarn B, ch 4; join with sl st in first ch to form a ring. Colors: rnd 1 yarn B; rnd 2 yarn C; rnd 3 yarn D; rnds 4 and 5 yarn A. Each new color is joined as its round says.
☐ **Rnd 1**	Ch 2; (3 dc, ch 2, 3 dc, ch 2, 3 dc, ch 2, 3 dc, ch 2) in ring; join with sl st in first dc **(12 dc, 4 ch-2 sps)**
☐ **Rnd 2**	Fasten off yarn B; join yarn C with a sl st in any ch-2 sp, ch 2; (3 dc, ch 2, 3 dc) in same sp, ch 1, **[**(3 dc, ch 2, 3 dc) in next ch-2 sp, ch 1**] 3 times**; join with sl st in first dc **(24 dc, 4 ch-2 sps, 4 ch-1 sps)**
☐ **Rnd 3**	Fasten off yarn C; join yarn D with a sl st in any ch-2 sp, ch 2; (3 dc, ch 2, 3 dc) in same sp, ch 1, 3 dc in next ch-1 sp, ch 1, **[**(3 dc, ch 2, 3 dc) in next ch-2 sp, ch 1, 3 dc in next ch-1 sp, ch 1**] 3 times**; join with sl st in first dc **(36 dc, 4 ch-2 sps, 8 ch-1 sps)**

For your own crochet, gifts and handmade pieces you sell. Do not resell or share this PDF or copies of it.

☐ **Rnd 4**	Fasten off yarn D; join yarn A with a sl st in any ch-2 sp, ch 2; (3 dc, ch 2, 3 dc) in same sp, ch 1, [3 dc in next ch-1 sp, ch 1] twice, **[**(3 dc, ch 2, 3 dc) in next ch-2 sp, ch 1, [3 dc in next ch-1 sp, ch 1] twice**] 3 times**; join with sl st in first dc **(48 dc, 4 ch-2 sps, 12 ch-1 sps)**
☐ **Rnd 5**	Ch 1; **[**sc in next 3 sts, (sc, ch 2, sc) in next ch-2 sp, sc in next 3 sts, sc in next ch-1 sp, [sc in next 3 sts, sc in next ch-1 sp] twice**] 4 times**; join with sl st in first sc **(68 sc, 4 ch-2 sps)**
☐ **End**	The square is about 4¼ in (10.8 cm) across and has 17 sts between its corner spaces on each side. Fasten off.

Square two: make 22

Yarns in order of use: E, fuchsia; B, gold; C, coral; A, charcoal.

☐ **Foundation**	With yarn E, ch 4; join with sl st in first ch to form a ring. Colors: rnd 1 yarn E; rnd 2 yarn B; rnd 3 yarn C; rnds 4 and 5 yarn A. Each new color is joined as its round says.
☐ **Rnd 1**	Ch 2; (3 dc, ch 2, 3 dc, ch 2, 3 dc, ch 2, 3 dc, ch 2) in ring; join with sl st in first dc **(12 dc, 4 ch-2 sps)**
☐ **Rnd 2**	Fasten off yarn E; join yarn B with a sl st in any ch-2 sp, ch 2; (3 dc, ch 2, 3 dc) in same sp, ch 1, **[**(3 dc, ch 2, 3 dc) in next ch-2 sp, ch 1**] 3 times**; join with sl st in first dc **(24 dc, 4 ch-2 sps, 4 ch-1 sps)**
☐ **Rnd 3**	Fasten off yarn B; join yarn C with a sl st in any ch-2 sp, ch 2; (3 dc, ch 2, 3 dc) in same sp, ch 1, 3 dc in next ch-1 sp, ch 1, **[**(3 dc, ch 2, 3 dc) in next ch-2 sp, ch 1, 3 dc in next ch-1 sp, ch 1**] 3 times**; join with sl st in first dc **(36 dc, 4 ch-2 sps, 8 ch-1 sps)**
☐ **Rnd 4**	Fasten off yarn C; join yarn A with a sl st in any ch-2 sp, ch 2; (3 dc, ch 2, 3 dc) in same sp, ch 1, [3 dc in next ch-1 sp, ch 1] twice, **[**(3 dc, ch 2, 3 dc) in next ch-2 sp, ch 1, [3 dc in next ch-1 sp, ch 1] twice**] 3 times**; join with sl st in first dc **(48 dc, 4 ch-2 sps, 12 ch-1 sps)**
☐ **Rnd 5**	Ch 1; **[**sc in next 3 sts, (sc, ch 2, sc) in next ch-2 sp, sc in next 3 sts, sc in next ch-1 sp, [sc in next 3 sts, sc in next ch-1 sp] twice**] 4 times**; join with sl st in first sc **(68 sc, 4 ch-2 sps)**
☐ **End**	Fasten off.

Square three: make 22

Yarns in order of use: D, turquoise; E, fuchsia; B, gold; A, charcoal.

☐ **Foundation**	With yarn D, ch 4; join with sl st in first ch to form a ring. Colors: rnd 1 yarn D; rnd 2 yarn E; rnd 3 yarn B; rnds 4 and 5 yarn A. Each new color is joined as its round says.
☐ **Rnd 1**	Ch 2; (3 dc, ch 2, 3 dc, ch 2, 3 dc, ch 2, 3 dc, ch 2) in ring; join with sl st in first dc **(12 dc, 4 ch-2 sps)**
☐ **Rnd 2**	Fasten off yarn D; join yarn E with a sl st in any ch-2 sp, ch 2; (3 dc, ch 2, 3 dc) in same sp, ch 1, **[**(3 dc, ch 2, 3 dc) in next ch-2 sp, ch 1**] 3 times**; join with sl st in first dc **(24 dc, 4 ch-2 sps, 4 ch-1 sps)**

For your own crochet, gifts and handmade pieces you sell. Do not resell or share this PDF or copies of it.

☐ **Rnd 3**	Fasten off yarn E; join yarn B with a sl st in any ch-2 sp, ch 2; (3 dc, ch 2, 3 dc) in same sp, ch 1, 3 dc in next ch-1 sp, ch 1, **[**(3 dc, ch 2, 3 dc) in next ch-2 sp, ch 1, 3 dc in next ch-1 sp, ch 1**] 3 times**; join with sl st in first dc **(36 dc, 4 ch-2 sps, 8 ch-1 sps)**
☐ **Rnd 4**	Fasten off yarn B; join yarn A with a sl st in any ch-2 sp, ch 2; (3 dc, ch 2, 3 dc) in same sp, ch 1, [3 dc in next ch-1 sp, ch 1] twice, **[**(3 dc, ch 2, 3 dc) in next ch-2 sp, ch 1, [3 dc in next ch-1 sp, ch 1] twice**] 3 times**; join with sl st in first dc **(48 dc, 4 ch-2 sps, 12 ch-1 sps)**
☐ **Rnd 5**	Ch 1; **[**sc in next 3 sts, (sc, ch 2, sc) in next ch-2 sp, sc in next 3 sts, sc in next ch-1 sp, [sc in next 3 sts, sc in next ch-1 sp] twice**] 4 times**; join with sl st in first sc **(68 sc, 4 ch-2 sps)**
☐ **End**	Fasten off.

Half square: make 4

Yarn B, gold.

☐ **Foundation**	With yarn B, ch 4; join with sl st in first ch to form a ring. The half square is worked in rows: turn at the end of each row. Colors: row 1 yarn B; row 2 yarn C; row 3 yarn D; rows 4 and 5 yarn A.
☐ **Row 1 (RS)**	Ch 2; (dc, ch 1, 3 dc, ch 2, 3 dc, ch 1, dc) in ring **(8 dc, 2 ch-1 sps, 1 ch-2 sp)**
☐ **Row 2**	Ch 2, turn; dc in first st, ch 1, 3 dc in next ch-1 sp, ch 1, (3 dc, ch 2, 3 dc) in next ch-2 sp, ch 1, 3 dc in next ch-1 sp, ch 1, dc in last st **(14 dc, 4 ch-1 sps, 1 ch-2 sp)**
☐ **Row 3**	Ch 2, turn; dc in first st, ch 1, [3 dc in next ch-1 sp, ch 1] twice, (3 dc, ch 2, 3 dc) in next ch-2 sp, ch 1, [3 dc in next ch-1 sp, ch 1] twice, dc in last st **(20 dc, 6 ch-1 sps, 1 ch-2 sp)**
☐ **Row 4**	Ch 2, turn; dc in first st, ch 1, **[**3 dc in next ch-1 sp, ch 1**] 3 times**, (3 dc, ch 2, 3 dc) in next ch-2 sp, ch 1, **[**3 dc in next ch-1 sp, ch 1**] 3 times**, dc in last st **(26 dc, 8 ch-1 sps, 1 ch-2 sp)**
☐ **Row 5**	Ch 1, turn; sc in first st, sc in next ch-1 sp, **[**sc in next 3 sts, sc in next ch-1 sp**] 3 times**, sc in next 3 sts, (sc, ch 2, sc) in next ch-2 sp, sc in next 3 sts, **[**sc in next ch-1 sp, sc in next 3 sts**] 3 times**, sc in next ch-1 sp, sc in last st **(36 sc, 1 ch-2 sp)**
☐ **End**	The ch-2 sp in the middle of the last row is the square corner; from it to each end of the row is a short edge, as long as the side of a square. The long edge, from end to end along the row ends and the ring, is left free: it is a part of the neck. Fasten off.

For your own crochet, gifts and handmade pieces you sell. Do not resell or share this PDF or copies of it.

Neck rib

Yarn A, charcoal.

☐ **Foundation**	Work this at step 8 of the finishing. With the right side facing, join yarn A at a shoulder, where a half square of the front and a half square of the back meet, in the end of the last row of the half square that lies to the left. Rnd 1 goes along the 10 row ends of that half square (the ring at its middle is passed over), into the corner ch-2 sp of the square between the two half squares, along the 10 row ends of the next half square to the other shoulder, and then in the same way along the other two half squares.
☐ **Rnd 1**	Ch 1; sc in the end of next row, 3 sc in the end of each of next 8 rows, sc in the end of next row, now into the corner, sc in next ch-2 sp, now along the next half square, sc in the end of next row, 3 sc in the end of each of next 8 rows, sc in the end of next row, now across the shoulder, sc in the end of next row, 3 sc in the end of each of next 8 rows, sc in the end of next row, now into the corner, sc in next ch-2 sp, now along the last half square, sc in the end of next row, 3 sc in the end of each of next 8 rows, sc in the end of next row; join with sl st in first sc **(106 sc)**
☐ **Rnd 2**	Ch 1; [sc in next 3 sts, sc2tog] twice, **[**sc in next 4 sts, sc2tog**] 16 times**; join with sl st in first sc **(88 sc)**
☐ **Rnd 3**	Ch 2; dc in each st around; join with sl st in first dc **(88 dc)**
☐ **Rnds 4 to 7**	Ch 2; **[**fpdc around next st, bpdc around next st**] 44 times**; join with sl st in first fpdc **(44 fpdcs, 44 bpdcs)**

A box for each round, 4 to 7: tick them off as you go.

4 5 6 7

☐ **End**	Fasten off.

Lower edging

Yarn A, charcoal.

☐ **Foundation**	Work this at step 9 of the finishing. With the right side facing, join yarn A in the first st after the corner sp at the right-hand end of the outer edge of either strip (the edge that has no seam), right beside the seam. Rnd 1 goes along the 136 sts of the 8 squares of that edge (17 sts on each square), round the corner, along the 68 sts of the 4 squares at the end of the strip, and then in the same way along the other strip. The corner sps at the seams are passed over; only the corner sp at the corner of each strip is worked into.
☐ **Rnd 1**	Ch 1; [sc in next 136 sts, 3 sc in next ch-2 sp, sc in next 68 sts] twice; join with sl st in first sc **(414 sc)**
☐ **End**	Fasten off.

Assembly

1. Lay out a strip with the right sides up, 4 squares wide and 8 rows high, from the bottom up. Row 1, from left to right: one, two, three, one. Row 2: two, three, one, two. Row 3: three, one, two, three. Rows 4 to 6 are as rows 1 to 3, and rows 7 and 8 as rows 1 and 2. This takes 11 of square one, 11 of square two and 10 of square three. Lay out a second strip in the same way; 2 of square three and the 4 half squares are left over for the neck.

2. Join each strip: hold two squares with right sides together and, with yarn A, whip stitch through both loops from corner

For your own crochet, gifts and handmade pieces you sell. Do not resell or share this PDF or copies of it.

to corner. Join the squares into rows, then the rows to each other.

3. The left-hand edge of a strip, with row 1 at the bottom, is its inner edge: the sides of rows 1 to 4 belong to the neck, and the sides of rows 5 to 8 are sewn. The right-hand edge is a part of the lower edge of the poncho.

4. First seam: turn the second strip so that the bottom edge of its row 1 lies along the inner edge of the first strip, beside rows 5 to 8, right sides up: the left-hand square of row 1 at row 5, the right-hand square at row 8. With right sides together and yarn A, whip stitch the 4 squares to the 4 squares, corner to corner.

5. Second seam: bring the bottom edge of row 1 of the first strip round to the inner edge of the second strip and sew it in the same way to rows 5 to 8 of the second strip. The poncho is now a ring, and its neck has two points: each lies between row 4 of one strip and row 1 of the other.

6. Squares at the neck: at each point sew one of the 2 squares three that are left into the corner: one of its sides to the inner side of row 4 of the one strip, the side next to it to the inner side of row 1 of the other strip.

7. Half squares: on each side of each of these two squares there is a gap with a square corner: one short edge of a half square is sewn to the free side of the square, the other short edge to the inner side of the strip (row 3 on the one side of the point, row 2 on the other), the square corner of the half square in the corner of the gap. A short edge has 18 sc from its corner ch-2 sp to the end of the row, one more than the 17 sts of a side: begin at the corner, sew sc to st 17 times, and sew the 18th sc, the last one of the edge, into the ch-2 sp at the far corner of the square or of the strip. The long edges of the 4 half squares now make the neck edge: two in a line across the front, with the corner of the square between them, and two across the back.

8. Neck rib: work it now, as written above.

9. Lower edging: work it now, as written above.

10. Fringe, all in yarn A: cut 414 strands 8 in (20.5 cm) long, 3 for each knot. For one knot fold 3 strands in half together, pull the fold through a stitch of the lower edging from front to back with the hook, draw the ends through the loop and pull it snug. Put one knot in every third st of the edging, beginning with its third st (138 knots). Trim the ends level, about 3½ in (9 cm) below the edge.

11. To wear it, turn it so that the two half squares of one side lie across the front: one corner of the lower edge then hangs at the middle of the front, the other at the back.

Finishing

- Weave in all the ends. Wash as the yarn label says and lay flat to the measurements to dry.

In all: 70 pieces.

Found a mistake in this pattern? Tell us at flossfield.com, under Make a request.

For your own crochet, gifts and handmade pieces you sell. Do not resell or share this PDF or copies of it.