Happy frog

US terms



Finished size
About 4¾ in (12 cm) tall

Skill
Easy
Nine pieces worked in rounds and sewn together.

Yarn
Medium (4), 4 colors

Hook
3.5 mm (US E-4)

Gauge
20 stitches and 22 rounds to 4 in (10 cm)
In single crochet, in a spiral.

You will need

Yarn A: spring green, the head, the body, the eye bumps, the arms and the legs	**about 145 yd (133 m), an estimate**
Yarn B: cream, the tummy patch	**about 5 yd (5 m), an estimate**
Yarn C: black, the mouth and the nostrils	**about 5 yd (5 m), an estimate**
Yarn D: peach, the cheeks	**about 5 yd (5 m), an estimate**

Hook: 3.5 mm (US E-4). Also: toy stuffing, a yarn needle, a stitch marker, pins, scissors and two black plastic eyes with washers, 10 mm.

To find how many balls: divide by the length on your yarn's label and round up. The estimate is from the stitches of this size at this gauge, with 30 percent added.

Abbreviations

Written in US terms. Where the UK name differs it is given beside the US one.

sc	single crochet (UK dc, double crochet)
sc2tog	single crochet 2 stitches together (UK dc2tog, double crochet 2 stitches together)
MR	magic ring
RS	right side

Gauge

20 stitches and 22 rounds to 4 in (10 cm) in single crochet, in a spiral.

20 sc and 22 rounds = 4 in (10 cm), worked in a spiral. To check it, work a flat circle: 6 sc in a magic ring, then 6 more sc in each round (12, 18, 24, 30, 36). After round 6 it should measure about 2¼ in (5.5 cm) across. The stitches should be tight enough that the stuffing does not show.

For your own crochet, gifts and handmade pieces you sell. Do not resell or share this PDF.

Before you start

- Every piece is worked in a continuous spiral with the right side facing you: do not join and do not turn. Put the marker in the first stitch of each round and move it up.
- Square brackets hold a repeat; work it as many times as the line says. The number in parentheses is the count at the end of the round.
- Magic ring: wrap the yarn round two fingers, work round 1 into the loop and pull the tail to close it. Or chain 2 and work round 1 into the first chain.
- Center line: on a piece that others are sewn to, places are given by round and by stitches from a center line. It is half way round from where the rounds begin. Mark it with a pin or a scrap of yarn as listed here, run it straight from round 1 to the last round by eye, and count out from it: a whole number of stitches ends between two stitches, a half ends in the middle of one.
- Head: the center line runs between stitches 27 and 28 of round 9 (54 sts). It faces the front, round 1 at the top.
- Body: the center line runs between stitches 18 and 19 of round 6 (36 sts). It faces the front.
- Right and left are as you look at the front of the toy. Rounds are counted from the start of each piece.
- To work sc2tog, put the hook under the front loop only of each of the next 2 stitches, yarn over, pull through both loops, yarn over, pull through 2 loops.
- Eyes: for a child under three, or a pet, embroider the eyes instead of plastic ones: satin stitch dots of the same size in C (black).
- The rounds and stitches are the same for every size; the yarn and the hook make the difference. Lengths in the words (tails, ovals, details) are for Standard: for another size multiply them by the number in its line.
- Small: fine (2, sport) yarn, 2.25 mm (B-1) hook, 27 sc and 30 rounds to 4 in (10 cm): about 3½ in (8.9 cm) tall; eyes 7 mm; multiply lengths by 0.74; about 0.74 times the yarn.
- Large: bulky (5, chunky) yarn, 5 mm (H-8) hook, 14 sc and 15.4 rounds to 4 in (10 cm): about 6¾ in (17 cm) tall; eyes 14 mm; multiply lengths by 1.4; about 1.4 times the yarn.
- Jumbo: super bulky (6, plush or velvet) yarn, 6.5 mm (K-10½) hook, 11 sc and 12.1 rounds to 4 in (10 cm): about 8¾ in (22 cm) tall; eyes 18 mm; multiply lengths by 1.8; about 1.8 times the yarn.
- Every size is approximate and follows from your gauge and how firmly you stuff.

Instructions

Square brackets [ ] hold a repeat: work what is inside as many times as it says. The count in round brackets at the end of a line is what that line leaves. Tick the box when a round is done. In UK terms sc is double crochet and sc2tog is double crochet 2 stitches together.

Head

Yarn A, spring green.

☐ **Foundation**	Make a magic ring.	
☐ **Rnd 1 (RS)**	6 sc in MR	**(6 sc)**
☐ **Rnd 2**	2 sc in each st around	**(12 sc)**
☐ **Rnd 3**	**[**sc in next st, 2 sc in next st**] 6 times**	**(18 sc)**
☐ **Rnd 4**	**[**2 sc in next st, sc in next 2 sts**] 6 times**	**(24 sc)**
☐ **Rnd 5**	**[**sc in next 3 sts, 2 sc in next st**] 6 times**	**(30 sc)**
☐ **Rnd 6**	**[**sc in next 2 sts, 2 sc in next st, sc in next 2 sts**] 6 times**	**(36 sc)**
☐ **Rnd 7**	**[**2 sc in next st, sc in next 5 sts**] 6 times**	**(42 sc)**

For your own crochet, gifts and handmade pieces you sell. Do not resell or share this PDF.

☐ **Rnd 8**	**[**sc in next 6 sts, 2 sc in next st**] 6 times**	**(48 sc)**
☐ **Rnd 9**	**[**sc in next 3 sts, 2 sc in next st, sc in next 4 sts**] 6 times**	**(54 sc)**
☐ **Rnds 10 to 15**	Sc in each st around	**(54 sc)**

A box for each round, 10 to 15: tick them off as you go.

☐ 10 ☐ 11 ☐ 12 ☐ 13 ☐ 14 ☐ 15

☐ **Rnd 16**	**[**sc2tog, sc in next 7 sts**] 6 times**	**(48 sc)**
☐ **Rnd 17**	**[**sc in next 6 sts, sc2tog**] 6 times**	**(42 sc)**
☐ **Rnd 18**	**[**sc in next 2 sts, sc2tog, sc in next 3 sts**] 6 times**	**(36 sc)**
☐ **Rnd 19**	**[**sc2tog, sc in next 4 sts**] 6 times**	**(30 sc)**
☐ **Rnd 20**	**[**sc in next 3 sts, sc2tog**] 6 times**	**(24 sc)**

Stuff firmly now, and keep adding stuffing until the last round.

☐ **Rnd 21**	**[**sc in next st, sc2tog, sc in next st**] 6 times**	**(18 sc)**
☐ **Rnd 22**	**[**sc2tog, sc in next st**] 6 times**	**(12 sc)**
☐ **Rnd 23**	**[**sc2tog**] 6 times**	**(6 sc)**
☐ **End**	Fasten off, leaving an 8 in (20 cm) tail. Thread the tail through the front loop of each of the last 6 stitches, pull it tight to close the hole and bury the end inside.	

Body

Yarn A, spring green.

Round 1 is the middle of the base.

☐ **Foundation**	Make a magic ring.	
☐ **Rnd 1 (RS)**	6 sc in MR	**(6 sc)**
☐ **Rnd 2**	2 sc in each st around	**(12 sc)**
☐ **Rnd 3**	**[**sc in next st, 2 sc in next st**] 6 times**	**(18 sc)**
☐ **Rnd 4**	**[**2 sc in next st, sc in next 2 sts**] 6 times**	**(24 sc)**
☐ **Rnd 5**	**[**sc in next 3 sts, 2 sc in next st**] 6 times**	**(30 sc)**
☐ **Rnd 6**	**[**sc in next 2 sts, 2 sc in next st, sc in next 2 sts**] 6 times**	**(36 sc)**
☐ **Rnds 7 to 11**	Sc in each st around	**(36 sc)**

A box for each round, 7 to 11: tick them off as you go.

☐ 7 ☐ 8 ☐ 9 ☐ 10 ☐ 11

☐ **Rnd 12**	**[**sc2tog, sc in next 4 sts**] 6 times**	**(30 sc)**
☐ **Rnds 13 to 14**	Sc in each st around	**(30 sc)**

A box for each round, 13 to 14: tick them off as you go.

☐ 13 ☐ 14

☐ **Rnd 15**	**[**sc in next 3 sts, sc2tog**] 6 times**	**(24 sc)**

For your own crochet, gifts and handmade pieces you sell. Do not resell or share this PDF.

☐ **Rnds 16 to 17**	Sc in each st around	**(24 sc)**

A box for each round, 16 to 17: tick them off as you go.

16 17

☐ **End**	Fasten off, leaving a 22 in (56 cm) tail for sewing. Stuff firmly up to the open edge.	

Eye bump: make 2

Yarn A, spring green.

☐ **Foundation**	Make a magic ring.	
☐ **Rnd 1 (RS)**	6 sc in MR	**(6 sc)**
☐ **Rnd 2**	2 sc in each st around	**(12 sc)**
☐ **Rnd 3**	**[**sc in next st, 2 sc in next st**] 6 times**	**(18 sc)**
☐ **Rnds 4 to 6**	Sc in each st around	**(18 sc)**

A box for each round, 4 to 6: tick them off as you go.

4 5 6

☐ **Rnd 7**	**[**sc2tog, sc in next 4 sts**] 3 times**	**(15 sc)**
☐ **End**	Fasten off, leaving a 16 in (41 cm) tail for sewing. Fix the eye now, before you stuff the piece (see Finishing). Stuff firmly up to the open edge.	

Tummy patch

Yarn B, cream.

☐ **Foundation**	Make a magic ring.	
☐ **Rnd 1 (RS)**	6 sc in MR	**(6 sc)**
☐ **Rnd 2**	2 sc in each st around	**(12 sc)**
☐ **Rnd 3**	**[**sc in next st, 2 sc in next st**] 6 times**	**(18 sc)**
☐ **Rnd 4**	**[**2 sc in next st, sc in next 2 sts**] 6 times**	**(24 sc)**
☐ **End**	Fasten off, leaving a 22 in (56 cm) tail for sewing. Do not stuff. Press it flat with the right side up.	

Arm: make 2

Yarn A, spring green.

☐ **Foundation**	Make a magic ring.	
☐ **Rnd 1 (RS)**	6 sc in MR	**(6 sc)**
☐ **Rnd 2**	**[**sc in next st, 2 sc in next st**] 3 times**	**(9 sc)**
☐ **Rnd 3**	**[**sc in next st, 2 sc in next st, sc in next st**] 3 times**	**(12 sc)**
☐ **Rnds 4 to 12**	Sc in each st around	**(12 sc)**

A box for each round, 4 to 12: tick them off as you go.

4 5 6 7 8 9 10 11 12

☐ **End**	Fasten off, leaving a 14 in (36 cm) tail for sewing. Stuff firmly up to the open edge.	

For your own crochet, gifts and handmade pieces you sell. Do not resell or share this PDF.

Leg: make 2

Yarn A, spring green.

☐ **Foundation**	Make a magic ring.	
☐ **Rnd 1 (RS)**	6 sc in MR	**(6 sc)**
☐ **Rnd 2**	2 sc in each st around	**(12 sc)**
☐ **Rnd 3**	**[**sc in next st, 2 sc in next st**] 6 times**	**(18 sc)**
☐ **Rnd 4**	Sc in each st around	**(18 sc)**
☐ **Rnd 5**	**[**sc2tog, sc in next 4 sts**] 3 times**	**(15 sc)**
☐ **Rnds 6 to 9**	Sc in each st around	**(15 sc)**

A box for each round, 6 to 9: tick them off as you go.

6 7 8 9

☐ **End** Fasten off, leaving a 16 in (41 cm) tail for sewing. Stuff firmly up to the open edge.

Assembly

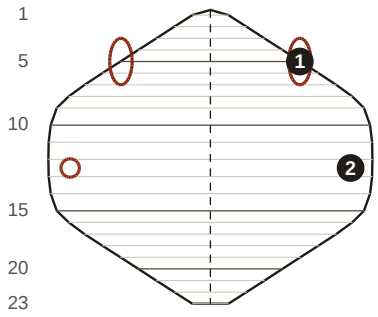

Head: 1 eye bumps, 2 cheeks

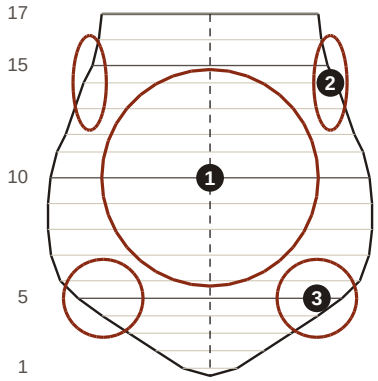

Body: 1 tummy patch, 2 arms, 3 legs

Each line is a round, counted as the rounds are worked. The upright broken line is the center line. A place with a broken edge is on the far side.

1. In every step: where a piece meets or overlaps another, sew through both. Where no tail is left or a tail is too short, sew with a new length of the same yarn; where a seam has two, use the longer. Set the head on the open edge of the body (24 sts), center lines in line: the edge lies on round 20 of the head (24 sts). Sew every stitch of the edge to the head, and top up the stuffing in the neck before the last stitches so that the head does not wobble.

2. Pin the two eye bumps to the head: the middle of each open edge lies on round 5, one to each side, 7 stitches from the center line (14 stitches apart). The edge (15 sts) covers about rounds 3 to 7 of the head. They point up. Sew all the way round with the tail, adding a little stuffing before the last few stitches if the edge is still soft.

3. Lay the tummy patch flat on the body, right side out, the middle of it on round 10, on the center line. Sew down all 24 stitches of the edge.

4. Pin the two arms to the body: the middle of each open edge lies on round 14, one to each side, 6 stitches from the center line (12 stitches apart). The edge (12 sts) covers about rounds 12 to 16 of the body. They point out to the side and down, then curve forward. Bend each as you pin it and hold the curve with a few running stitches along its inner side, drawn up a little. Sew all the way round with the tail, adding a little stuffing before the last few stitches if the edge is still soft.

For your own crochet, gifts and handmade pieces you sell. Do not resell or share this PDF.

5. Pin the two legs to the body: the middle of each open edge lies on round 5, one to each side, 4½ stitches from the center line (9 stitches apart). The edge (15 sts) covers about rounds 3 to 7 of the body. They point forward and out to the side from under the front edge of the body, lying along the table. Sew all the way round with the tail, adding a little stuffing before the last few stitches if the edge is still soft.

Finishing

- Use one strand of yarn and the yarn needle for all the embroidery. Plastic eyes go in before a piece is closed or sewn on; embroider, and knot in any lengths, when the pieces round the place are sewn on.
- Eyes: one 10 mm black plastic eye on each eye bump, on round 4, on the side that faces forward.
- Cheeks: with D (peach), in satin stitch, an oval about 3/8 in (10 mm) wide and 3/16 in (5 mm) tall, its middle on the head between rounds 12 and 13, one to each side, 9 stitches from the center line (18 stitches apart).
- Mouth: with C (black), in backstitch, a smile, one curve about 1 5/16 in (33 mm) wide that dips ¼ in (6 mm), the point midway between its ends on the head on round 11, on the center line.
- Nostrils: with C (black), one tiny upright stitch on each side on the head, on round 10, 1 stitch from the center line.
- Weave every tail through the toy and trim it. For a toy that will be played with, go round each seam a second time with a new length of yarn. Check the seams and small parts from time to time.

In all: 9 pieces; 2,076 stitches (810 in the head, 468 in the body, 105 in each eye bump, 60 in the tummy patch, 135 in each arm, 129 in each leg); 18 ends to weave in.

Found a mistake in this pattern? Tell us at flossfield.com, under Make a request.

For your own crochet, gifts and handmade pieces you sell. Do not resell or share this PDF.