Kids' two-color raglan sweater

Size 6 · US terms



Finished size

About 28¼ in (72 cm) at the chest and about 15½ in (39.5 cm) long

To fit a chest of 25 in (63.5 cm)

Skill

Easy

Double crochet in joined rounds from the neck down, with simple increases and a post stitch rib.

Yarn

Medium (4), 2 colors

Hook

5.5 mm (US I-9)

Gauge

13 stitches and 7 rounds to 4 in (10 cm)

In double crochet.

You will need

Yarn A: fern, the body, sleeves and neckband **about 350 yd (320 m), an estimate**

Yarn B: cream, the yoke **about 125 yd (114 m), an estimate**

Hook: 5.5 mm (US I-9). Also: yarn needle, scissors and tape measure.

To find how many balls: divide by the length on your yarn's label and round up. The estimate is from the stitches of this size at this gauge.

Sizes

Size	To fit chest	Chest	Length	Yoke depth	Sleeve	Upper sleeve	Neck	Yarn, an estimate
Size 2	21 in (53.5 cm)	24½ in (62 cm)	13¼ in (33.5 cm)	4½ in (11.5 cm)	8½ in (21.5 cm)	9¼ in (23.5 cm)	18½ in (47 cm)	about 365 yd (333 m)
Size 4	23 in (58.5 cm)	25¾ in (65.5 cm)	14¼ in (36 cm)	5¼ in (13.5 cm)	10¾ in (27.5 cm)	9¾ in (25 cm)	18½ in (47 cm)	about 405 yd (370 m)
Size 6 (this file)	**25 in (63.5 cm)**	**28¼ in (72 cm)**	**15½ in (39.5 cm)**	**5¾ in (14.5 cm)**	**12 in (30.5 cm)**	**9¾ in (25 cm)**	**19¾ in (50 cm)**	**about 475 yd (434 m)**
Size 8	26½ in (67.5 cm)	29½ in (75 cm)	17¾ in (45 cm)	6¼ in (16 cm)	12½ in (32 cm)	10½ in (26.5 cm)	19¾ in (50 cm)	about 545 yd (499 m)
Size 10	28 in (71 cm)	30¾ in (78 cm)	18¾ in (47.5 cm)	6¾ in (17 cm)	13¾ in (35 cm)	11 in (28 cm)	19¾ in (50 cm)	about 610 yd (557 m)

For your own crochet, gifts and handmade pieces you sell. Do not resell or share this PDF.

Size 12	30 in (76 cm)	33¼ in (84.5 cm)	19½ in (49.5 cm)	6¾ in (17 cm)	15½ in (39.5 cm)	11 in (28 cm)	19¾ in (50 cm)	about 685 yd (626 m)
Size 14	31½ in (80 cm)	34½ in (87.5 cm)	20 in (51 cm)	7½ in (19 cm)	16 in (40.5 cm)	11 in (28 cm)	21 in (53.5 cm)	about 705 yd (645 m)

Schematic

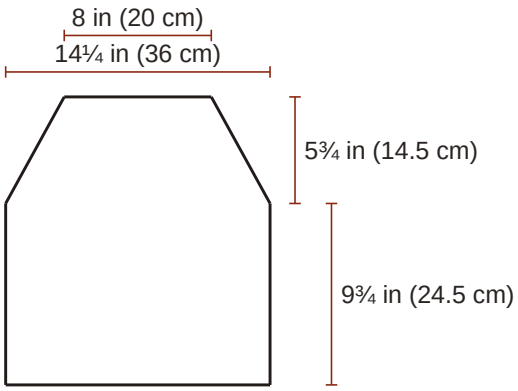

Body, laid flat

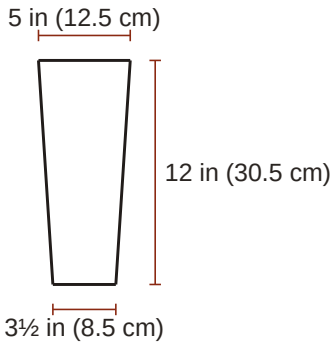

Sleeve, laid flat

Abbreviations

Written in US terms. Where the UK name differs it is given beside the US one.

ch chain
sl st slip stitch (UK ss, slip stitch)
sc single crochet (UK dc, double crochet)
dc double crochet (UK tr, treble)
sp space
st stitch
rnd round

Special stitches

dc2tog (double crochet 2 stitches together (UK treble 2 together)): [Yarn over, insert the hook in the next stitch and pull up a loop, yarn over and pull through 2 loops] twice (3 loops on the hook); yarn over and pull through all 3 loops. It leaves 1 dc2tog for the next row.

fpdc (front post double crochet (UK front post treble)): Yarn over, insert the hook from the front to the back and to the front again around the post of the stitch named, pull up a loop, [yarn over and pull through 2 loops] twice. The front is the side that faces you. A post stitch takes the place of the stitch it is worked around: do not work into the top of that stitch as well. It leaves 1 fpdc for the next row.

bpdc (back post double crochet (UK back post treble)): As fpdc, but insert the hook from the back to the front and to the back again around the post. It leaves 1 bpdc for the next row.

For your own crochet, gifts and handmade pieces you sell. Do not resell or share this PDF.

Gauge

13 stitches and 7 rounds to 4 in (10 cm) in double crochet.

> **The swatch.** A test piece to measure and pull out. It is not the start of the pattern. Ch 22; work 10 rows of double crochet on 20 sts, about 6¼ in (16 cm) wide and 5¾ in (14.5 cm) high, and measure 4 in (10 cm) in the middle. Use a larger hook if your swatch is small, a smaller one if it is large.

Before you start

- Child's sizes, 2 to 14.
- The finished chest is from 2¾ in (7 cm) to 3½ in (9 cm) wider than the body measurement, by the size. Choose by the finished measurement you like; no fit is promised beyond the measurements given.
- Worked from the neck down in one piece. The rounds are not turned; the right side always faces you.
- The rounds begin at the middle of the back, so the first and the last section of each round are the two halves of the back.
- Work the foundation chain and the neckband loosely: the neck has no opening and must stretch over the head.
- The chain at the start of a round or row (ch 1 for single crochet, ch 2 for double crochet) never counts as a stitch. Work the first stitch into the stitch at its base.
- A ch-1 sp marks each of the four raglan lines. The ch-1 sps are counted apart from the stitches.
- A decrease counts as one stitch.
- At the underarms, work into each of the new chains as into a stitch on the next round. The sleeves are worked into the free side of these chains.
- For the rib, always work around the post (the upright part) of the stitch below, not into its top.
- Compare the neck measurement with the head it is for before you begin.

Instructions

Chosen: Size 6. Square brackets [ ] hold a repeat: work what is inside as many times as it says. Round brackets ( ) inside a line hold stitches that all go into one place. The count in round brackets at the end of a line is what that line leaves. Tick the box when a round is done. In UK terms sl st is slip stitch, sc is double crochet and dc is treble.

Yoke

Yarn B, cream.

Colors: rnds 1 to 10 yarn B. Join rnd 10, the last of the yoke, with a sl st in yarn A, which the body begins with. Cut yarn B, leaving an end of about 6 in (15 cm).

☐ **Foundation**	With yarn B, ch 64; join with sl st in first ch to form a ring, taking care not to twist the chain.	
☐ **Rnd 1**	Ch 2; dc in next 12 chs, ch 1, dc in next 8 chs, ch 1, dc in next 24 chs, ch 1, dc in next 8 chs, ch 1, dc in next 12 chs; join with sl st in first dc	**(64 dc, 4 ch-1 sps)**
☐ **Rnd 2**	Ch 2; **[**dc in each st to next ch-1 sp, (dc, ch 1, dc) in next ch-1 sp**] 4 times**, dc in each st around; join with sl st in first dc	**(72 dc, 4 ch-1 sps)**
☐ **Rnd 3**	Ch 2; **[**dc in each st to next ch-1 sp, (dc, ch 1, dc) in next ch-1 sp**] 4 times**, dc in each st around; join with sl st in first dc	**(80 dc, 4 ch-1 sps)**
☐ **Rnd 4**	Ch 2; **[**dc in each st to next ch-1 sp, (dc, ch 1, dc) in next ch-1 sp**] 4 times**, dc in each st around; join with sl st in first dc	**(88 dc, 4 ch-1 sps)**

For your own crochet, gifts and handmade pieces you sell. Do not resell or share this PDF.

☐ **Rnd 5**	Ch 2; **[**dc in each st to next ch-1 sp, (dc, ch 1, dc) in next ch-1 sp**] 4 times**, dc in each st around; join with sl st in first dc	**(96 dc, 4 ch-1 sps)**
☐ **Rnd 6**	Ch 2; **[**dc in each st to next ch-1 sp, (dc, ch 1, dc) in next ch-1 sp**] 4 times**, dc in each st around; join with sl st in first dc	**(104 dc, 4 ch-1 sps)**
☐ **Rnd 7**	Ch 2; **[**dc in each st to next ch-1 sp, (dc, ch 1, dc) in next ch-1 sp**] 4 times**, dc in each st around; join with sl st in first dc	**(112 dc, 4 ch-1 sps)**
☐ **Rnd 8**	Ch 2; **[**dc in each st to next ch-1 sp, (dc, ch 1, dc) in next ch-1 sp**] 4 times**, dc in each st around; join with sl st in first dc	**(120 dc, 4 ch-1 sps)**
☐ **Rnd 9**	Ch 2; **[**dc in each st to next ch-1 sp, (dc, ch 1, dc) in next ch-1 sp**] 4 times**, dc in each st around; join with sl st in first dc	**(128 dc, 4 ch-1 sps)**
☐ **Rnd 10**	Ch 2; **[**dc in each st to next ch-1 sp, (dc, ch 1, dc) in next ch-1 sp**] 4 times**, dc in each st around; join with sl st in first dc	**(136 dc, 4 ch-1 sps)**
☐ **End**	Do not fasten off.	

Body

Yarn A, fern.

Colors: rnds 11 to 27 yarn A (the yoke, rnds 1 to 10, was yarn B).

☐ **Foundation**	Go on from rnd 10 of the yoke.	
☐ **Rnd 11**	Ch 2; dc in each st to next ch-1 sp, ch 4 (underarm), skip next ch-1 sp, next 26 sts and next ch-1 sp (one sleeve), dc in each st to next ch-1 sp, ch 4 (underarm), skip next ch-1 sp, next 26 sts and next ch-1 sp (one sleeve), dc in each st around; join with sl st in first dc	**(84 dc, 8 ch)**
☐ **Rnds 12 to 24**	Ch 2; dc in each st around; join with sl st in first dc	**(92 dc)**

A box for each round, 12 to 24: tick them off as you go.

☐ 12 ☐ 13 ☐ 14 ☐ 15 ☐ 16 ☐ 17 ☐ 18 ☐ 19 ☐ 20 ☐ 21 ☐ 22 ☐ 23 ☐ 24

☐ **Rnds 25 to 27**	Ch 2; **[**fpdc around next st, bpdc around next st**] 46 times**; join with sl st in first fpdc	**(46 fpdcs, 46 bpdcs)**

A box for each round, 25 to 27: tick them off as you go.

☐ 25 ☐ 26 ☐ 27

☐ **End**	Fasten off.	

Sleeve: make 2

Yarn A, fern.

☐ **Foundation**	With the right side facing, join yarn A in the middle of one underarm.	
☐ **Rnd 1**	Ch 2, dc in each of the first 2 underarm chs, dc in the ch-1 sp, dc in each of the 26 sleeve sts, dc in the next ch-1 sp and dc in each of the last 2 underarm chs; join with sl st in first dc	**(32 dc)**
☐ **Rnd 2**	Ch 2; dc in each st around; join with sl st in first dc	**(32 dc)**
☐ **Rnd 3**	Ch 2; dc2tog, dc in each st around to last 2 sts, dc2tog; join with sl st in first dc2tog	**(30 dc)**

For your own crochet, gifts and handmade pieces you sell. Do not resell or share this PDF.

☐ **Rnds 4 to 5**	Ch 2; dc in each st around; join with sl st in first dc	**(30 dc)**

A box for each round, 4 to 5: tick them off as you go.

4 5

☐ **Rnd 6**	Ch 2; dc2tog, dc in each st around to last 2 sts, dc2tog; join with sl st in first dc2tog	**(28 dc)**
☐ **Rnd 7**	Ch 2; dc in each st around; join with sl st in first dc	**(28 dc)**
☐ **Rnd 8**	Ch 2; dc in each st around; join with sl st in first dc	**(28 dc)**
☐ **Rnd 9**	Ch 2; dc2tog, dc in each st around to last 2 sts, dc2tog; join with sl st in first dc2tog	**(26 dc)**
☐ **Rnd 10**	Ch 2; dc in each st around; join with sl st in first dc	**(26 dc)**
☐ **Rnd 11**	Ch 2; dc in each st around; join with sl st in first dc	**(26 dc)**
☐ **Rnd 12**	Ch 2; dc2tog, dc in each st around to last 2 sts, dc2tog; join with sl st in first dc2tog	**(24 dc)**
☐ **Rnd 13**	Ch 2; dc in each st around; join with sl st in first dc	**(24 dc)**
☐ **Rnd 14**	Ch 2; dc in each st around; join with sl st in first dc	**(24 dc)**
☐ **Rnd 15**	Ch 2; dc2tog, dc in each st around to last 2 sts, dc2tog; join with sl st in first dc2tog	**(22 dc)**
☐ **Rnd 16**	Ch 2; dc in each st around; join with sl st in first dc	**(22 dc)**
☐ **Rnd 17**	Ch 2; dc in each st around; join with sl st in first dc	**(22 dc)**
☐ **Rnd 18**	Ch 2; dc in each st around; join with sl st in first dc	**(22 dc)**
☐ **Rnds 19 to 21**	Ch 2; **[**fpdc around next st, bpdc around next st**] 11 times**; join with sl st in first fpdc	**(11 fpdcs, 11 bpdcs)**

A box for each round, 19 to 21: tick them off as you go.

19 20 21

☐ **End**	Fasten off.	

Neckband

Yarn A, fern.

☐ **Foundation**	With the right side facing, join yarn A in the foundation chain at the middle of the back.	
☐ **Rnd 1**	Ch 1, sc in each ch around; join with sl st in first sc	**(64 sc)**
☐ **Rnds 2 to 3**	Ch 1; sc in each st around; join with sl st in first sc	**(64 sc)**

A box for each round, 2 to 3: tick them off as you go.

2 3

☐ **End**	Fasten off.	

Putting it together

Close any small gaps at the underarms with the yarn ends there.

Finishing

- Weave in all the ends. Wash as the yarn label says and lay flat to the measurements to dry.

In all: 5 pieces; 10 ends to weave in.

Found a mistake in this pattern? Tell us at flossfield.com, under Make a request.

For your own crochet, gifts and handmade pieces you sell. Do not resell or share this PDF.