Kids' rainbow striped sweater

Size 6 · US terms



Finished size

About 29½ in (75 cm) at the chest and about 14¾ in (37.5 cm) long

To fit a chest of 25 in (63.5 cm)

Skill

Easy

Flat pieces in half double crochet with simple shaping at the neck and along the sleeves, then straight seams.

Yarn

Medium (4), 4 colors

Hook

5.5 mm (US I-9)

Gauge

13 stitches and 11 rows to 4 in (10 cm)

In half double crochet.

You will need

Yarn A: sky, the ribs, the neckband and stripes	**about 225 yd (206 m), an estimate**
Yarn B: coral, stripes	**about 145 yd (133 m), an estimate**
Yarn C: lemon, stripes	**about 125 yd (114 m), an estimate**
Yarn D: fern, stripes	**about 125 yd (114 m), an estimate**

Hook: 5.5 mm (US I-9). Also: yarn needle, scissors, tape measure and stitch markers.

To find how many balls: divide by the length on your yarn's label and round up. The estimate is from the stitches of this size at this gauge.

Sizes

Size	To fit chest	Chest	Length	Armhole depth	Sleeve	Upper sleeve	Back neck	Yarn, an estimate
Size 2	21 in (53.5 cm)	25¾ in (65.5 cm)	12¾ in (32.5 cm)	4½ in (11.5 cm)	7½ in (19 cm)	9¼ in (23.5 cm)	8 in (20.5 cm)	about 440 yd (402 m)
Size 4	23 in (58.5 cm)	28¼ in (72 cm)	14 in (35.5 cm)	5¼ in (13.5 cm)	9¾ in (25 cm)	10½ in (26.5 cm)	8 in (20.5 cm)	about 575 yd (526 m)
Size 6 (this file)	**25 in (63.5 cm)**	**29½ in (75 cm)**	**14¾ in (37.5 cm)**	**5½ in (14 cm)**	**10½ in (26.5 cm)**	**11 in (28 cm)**	**8½ in (21.5 cm)**	**about 620 yd (567 m)**
Size 8	26½ in (67.5 cm)	32 in (81.5 cm)	17 in (43 cm)	6¼ in (16 cm)	11¼ in (28.5 cm)	12¼ in (31 cm)	8½ in (21.5 cm)	about 780 yd (712 m)

For your own crochet, gifts and handmade pieces you sell. Do not resell or share this PDF.

Size 10	28 in (71 cm)	33¼ in (84.5 cm)	18½ in (47 cm)	6½ in (16.5 cm)	12 in (30.5 cm)	13 in (33 cm)	9¼ in (23.5 cm)	about 875 yd (800 m)
Size 12	30 in (76 cm)	34½ in (87.5 cm)	19¼ in (49 cm)	7 in (18 cm)	13½ in (34.5 cm)	14¼ in (36 cm)	8½ in (21.5 cm)	about 1,000 yd (915 m)
Size 14	31½ in (80 cm)	37 in (94 cm)	20 in (51 cm)	7½ in (19 cm)	14 in (35.5 cm)	14¾ in (37.5 cm)	9¼ in (23.5 cm)	about 1,050 yd (961 m)

Schematic

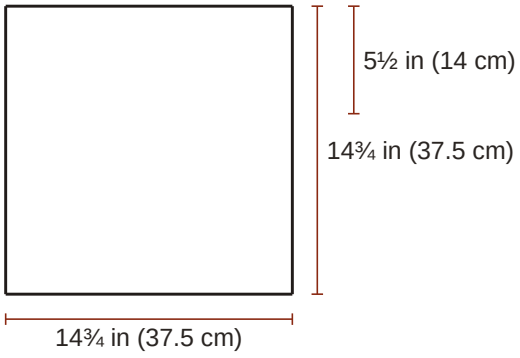

Back

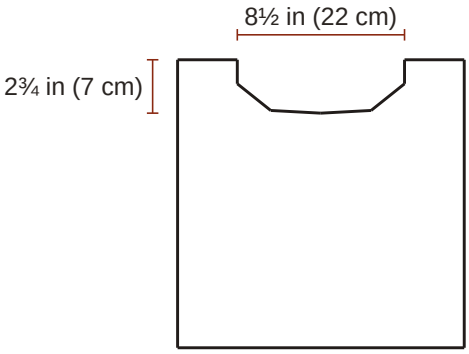

Front

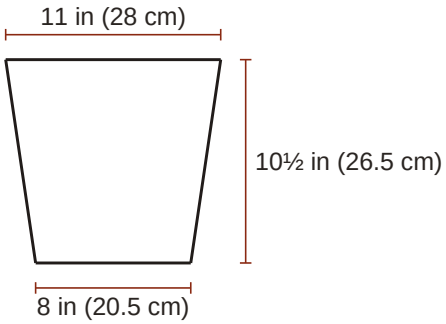

Sleeve (make 2)

For your own crochet, gifts and handmade pieces you sell. Do not resell or share this PDF.

Abbreviations

Written in US terms. Where the UK name differs it is given beside the US one.

ch	chain
sl st	slip stitch (UK ss, slip stitch)
sc	single crochet (UK dc, double crochet)
hdc	half double crochet (UK htr, half treble)
st	stitch
rnd	round
RS	right side

Special stitches

hdc2tog (half double crochet 2 stitches together (UK half treble 2 together)): [Yarn over, insert the hook in the next stitch and pull up a loop] twice (5 loops on the hook); yarn over and pull through all 5 loops. It leaves 1 hdc2tog for the next row.

Gauge

13 stitches and 11 rows to 4 in (10 cm) in half double crochet.

Ribs: worked sideways, 14 rows and 13 sts to 4 in (10 cm), so a rib of 6 sts is about 1¾ in (4.5 cm) deep.

> **The swatch.** A test piece to measure and pull out. It is not the start of the pattern. Ch 21; work 16 rows of half double crochet on 20 sts, about 6¼ in (16 cm) wide and 5¾ in (14.5 cm) high, and measure 4 in (10 cm) in the middle. Use a larger hook if your swatch is small, a smaller one if it is large. Ribs: worked sideways, 14 rows and 13 sts to 4 in (10 cm), so a rib of 6 sts is about 1¾ in (4.5 cm) deep.

Before you start

- Child's sizes, 2 to 14.
- The finished chest is from 4½ in (11.5 cm) to 5½ in (14 cm) wider than the body measurement, by the size. Choose by the finished measurement you like; no fit is promised beyond the measurements given.
- In back loop only: insert the hook under the loop of the stitch that is farther from you, and leave the nearer loop free.
- The turning chain (ch 1 for single and half double crochet) never counts as a stitch. Work the first stitch of every row into the first stitch, at the base of the turning chain.
- The chain at the start of a round never counts as a stitch. Work the first stitch of the round into the stitch at its base, where the round was joined.
- Odd-numbered rows are right side rows. Mark the right side of each piece with a stitch marker or a scrap of yarn.
- A decrease counts as one stitch.
- The ribs are worked sideways in back-loop single crochet (UK: double crochet). The body and sleeves are worked up from a long edge, one stitch in the end of each rib row.
- Stitches worked evenly along row ends: about 7 sc in every 6 rows.
- Sew every seam with the yarn needle and yarn A.
- Color changes in rows: work the last yarn over of the last stitch of the row before with the new yarn. Cut the old yarn, leaving an end of about 6 in (15 cm), or, if it is needed again at the same edge within 6 rows, carry it loosely up that edge.

For your own crochet, gifts and handmade pieces you sell. Do not resell or share this PDF.

Instructions

Chosen: Size 6. The count in round brackets at the end of a line is what that line leaves. Tick the box when a row is done. In UK terms sl st is slip stitch, sc is double crochet and hdc is half treble.

Hem rib: make 2, one for the back and one for the front

Yarn A, sky.

☐ **Foundation**	With yarn A, ch 7.	
☐ **Row 1 (RS)**	Sc in 2nd ch from hook and in each ch across	**(6 sc)**
☐ **Rows 2 to 48**	Ch 1, turn; sc in back loop only of each st across	**(6 sc)**

A box for each row, 2 to 48: tick them off as you go.

2 3 4 5 6 7 8 9 10 11 12 13 14 15 16 17 18 19 20 21 22 23 24 25 26 27 28 29 30
31 32 33 34 35 36 37 38 39 40 41 42 43 44 45 46 47 48

☐ **End** Fasten off.

Back

Yarns in order of use: A, sky; B, coral; C, lemon; D, fern.

Colors, counted from row 1: 2 rows yarn A, 2 rows yarn B, 2 rows yarn C, 2 rows yarn D; repeat these 8 rows to the end (the last repeat may stop part way).

☐ **Foundation**	Hold a hem rib with one long edge at the top. Join yarn A at the right-hand end of that edge.	
☐ **Row 1 (RS)**	Ch 1, sc in the end of each rib row across	**(48 sc)**
☐ **Row 2**	Ch 1, turn; hdc in each st across	**(48 hdc)**
☐ **Rows 3 to 4**	**Yarn B.** Ch 1, turn; hdc in each st across	**(48 hdc)**

A box for each row, 3 to 4: tick them off as you go.

3 4

☐ **Rows 5 to 6**	**Yarn C.** Ch 1, turn; hdc in each st across	**(48 hdc)**

A box for each row, 5 to 6: tick them off as you go.

5 6

☐ **Rows 7 to 8**	**Yarn D.** Ch 1, turn; hdc in each st across	**(48 hdc)**

A box for each row, 7 to 8: tick them off as you go.

7 8

☐ **Rows 9 to 10**	**Yarn A.** Ch 1, turn; hdc in each st across	**(48 hdc)**

A box for each row, 9 to 10: tick them off as you go.

9 10

☐ **Rows 11 to 12**	**Yarn B.** Ch 1, turn; hdc in each st across	**(48 hdc)**

A box for each row, 11 to 12: tick them off as you go.

11 12

☐ **Rows 13 to 14**	**Yarn C.** Ch 1, turn; hdc in each st across	**(48 hdc)**

A box for each row, 13 to 14: tick them off as you go.

13 14

For your own crochet, gifts and handmade pieces you sell. Do not resell or share this PDF.

☐ **Rows 15 to 16** **Yarn D.** Ch 1, turn; hdc in each st across **(48 hdc)**

A box for each row, 15 to 16: tick them off as you go.

15 16

☐ **Rows 17 to 18** **Yarn A.** Ch 1, turn; hdc in each st across **(48 hdc)**

A box for each row, 17 to 18: tick them off as you go.

17 18

☐ **Rows 19 to 20** **Yarn B.** Ch 1, turn; hdc in each st across **(48 hdc)**

A box for each row, 19 to 20: tick them off as you go.

19 20

☐ **Rows 21 to 22** **Yarn C.** Ch 1, turn; hdc in each st across **(48 hdc)**

A box for each row, 21 to 22: tick them off as you go.

21 22

☐ **Rows 23 to 24** **Yarn D.** Ch 1, turn; hdc in each st across **(48 hdc)**

A box for each row, 23 to 24: tick them off as you go.

23 24

☐ **Rows 25 to 26** **Yarn A.** Ch 1, turn; hdc in each st across **(48 hdc)**

A box for each row, 25 to 26: tick them off as you go.

25 26

☐ **Rows 27 to 28** **Yarn B.** Ch 1, turn; hdc in each st across **(48 hdc)**

A box for each row, 27 to 28: tick them off as you go.

27 28

☐ **Rows 29 to 30** **Yarn C.** Ch 1, turn; hdc in each st across **(48 hdc)**

A box for each row, 29 to 30: tick them off as you go.

29 30

☐ **Rows 31 to 32** **Yarn D.** Ch 1, turn; hdc in each st across **(48 hdc)**

A box for each row, 31 to 32: tick them off as you go.

31 32

☐ **Rows 33 to 34** **Yarn A.** Ch 1, turn; hdc in each st across **(48 hdc)**

A box for each row, 33 to 34: tick them off as you go.

33 34

☐ **Rows 35 to 36** **Yarn B.** Ch 1, turn; hdc in each st across **(48 hdc)**

A box for each row, 35 to 36: tick them off as you go.

35 36

☐ **End** The back measures about 14¾ in (37.5 cm) wide and 14¾ in (37.5 cm) long. Fasten off.

For your own crochet, gifts and handmade pieces you sell. Do not resell or share this PDF.

Front

Yarns in order of use: A, sky; B, coral; C, lemon; D, fern.

Colors, counted from row 1: 2 rows yarn A, 2 rows yarn B, 2 rows yarn C, 2 rows yarn D; repeat these 8 rows to the end (the last repeat may stop part way).

☐ **Foundation**	Hold a hem rib with one long edge at the top. Join yarn A at the right-hand end of that edge.	
☐ **Row 1 (RS)**	Ch 1, sc in the end of each rib row across	**(48 sc)**
☐ **Row 2**	Ch 1, turn; hdc in each st across	**(48 hdc)**
☐ **Rows 3 to 4**	**Yarn B.** Ch 1, turn; hdc in each st across	**(48 hdc)**

A box for each row, 3 to 4: tick them off as you go.

3 4

☐ **Rows 5 to 6**	**Yarn C.** Ch 1, turn; hdc in each st across	**(48 hdc)**

A box for each row, 5 to 6: tick them off as you go.

5 6

☐ **Rows 7 to 8**	**Yarn D.** Ch 1, turn; hdc in each st across	**(48 hdc)**

A box for each row, 7 to 8: tick them off as you go.

7 8

☐ **Rows 9 to 10**	**Yarn A.** Ch 1, turn; hdc in each st across	**(48 hdc)**

A box for each row, 9 to 10: tick them off as you go.

9 10

☐ **Rows 11 to 12**	**Yarn B.** Ch 1, turn; hdc in each st across	**(48 hdc)**

A box for each row, 11 to 12: tick them off as you go.

11 12

☐ **Rows 13 to 14**	**Yarn C.** Ch 1, turn; hdc in each st across	**(48 hdc)**

A box for each row, 13 to 14: tick them off as you go.

13 14

☐ **Rows 15 to 16**	**Yarn D.** Ch 1, turn; hdc in each st across	**(48 hdc)**

A box for each row, 15 to 16: tick them off as you go.

15 16

☐ **Rows 17 to 18**	**Yarn A.** Ch 1, turn; hdc in each st across	**(48 hdc)**

A box for each row, 17 to 18: tick them off as you go.

17 18

☐ **Rows 19 to 20**	**Yarn B.** Ch 1, turn; hdc in each st across	**(48 hdc)**

A box for each row, 19 to 20: tick them off as you go.

19 20

☐ **Rows 21 to 22**	**Yarn C.** Ch 1, turn; hdc in each st across	**(48 hdc)**

A box for each row, 21 to 22: tick them off as you go.

21 22

For your own crochet, gifts and handmade pieces you sell. Do not resell or share this PDF.

☐ **Rows 23 to 24**	**Yarn D.** Ch 1, turn; hdc in each st across	**(48 hdc)**

A box for each row, 23 to 24: tick them off as you go.

23 24

☐ **Rows 25 to 26**	**Yarn A.** Ch 1, turn; hdc in each st across	**(48 hdc)**

A box for each row, 25 to 26: tick them off as you go.

25 26

☐ **Rows 27 to 28**	**Yarn B.** Ch 1, turn; hdc in each st across	**(48 hdc)**

A box for each row, 27 to 28: tick them off as you go.

27 28

☐ **End**	Do not fasten off.	

Front, first side of the neck

Yarns in order of use: C, lemon; D, fern; A, sky; B, coral.

Colors: rows 29 and 30 yarn C; rows 31 and 32 yarn D; rows 33 and 34 yarn A; rows 35 and 36 yarn B.

☐ **Foundation**	Go on from row 28 of the front. This is the left side as worn. The neck edge is at the end of the next row.	
☐ **Row 29**	Ch 1, turn; hdc in next 16 sts, leave the last 32 sts unworked	**(16 hdc)**
☐ **Row 30**	Ch 1, turn; hdc2tog, hdc in each st across	**(15 hdc)**
☐ **Row 31**	**Yarn D.** Ch 1, turn; hdc in each st across to last 2 sts, hdc2tog	**(14 hdc)**
☐ **Row 32**	Ch 1, turn; hdc2tog, hdc in each st across	**(13 hdc)**
☐ **Row 33**	**Yarn A.** Ch 1, turn; hdc in each st across to last 2 sts, hdc2tog	**(12 hdc)**
☐ **Row 34**	Ch 1, turn; hdc2tog, hdc in each st across	**(11 hdc)**
☐ **Row 35**	**Yarn B.** Ch 1, turn; hdc in each st across to last 2 sts, hdc2tog	**(10 hdc)**
☐ **Row 36**	Ch 1, turn; hdc in each st across	**(10 hdc)**
☐ **End**	The 10 sts left are the shoulder. Fasten off.	

Front, second side of the neck

Yarns in order of use: C, lemon; D, fern; A, sky; B, coral.

Colors: rows 29 and 30 yarn C; rows 31 and 32 yarn D; rows 33 and 34 yarn A; rows 35 and 36 yarn B.

☐ **Foundation**	Go back to row 28 of the front, with the same side facing you as for row 29 of the first side. Skip the next 16 unworked sts of row 28 for the neck and join yarn C in the next st. This is the right side as worn. The first st of row 29 goes in the joining st. The neck edge is at the beginning of that row.	
☐ **Row 29**	Ch 1; hdc in each st across	**(16 hdc)**
☐ **Row 30**	Ch 1, turn; hdc in each st across to last 2 sts, hdc2tog	**(15 hdc)**
☐ **Row 31**	**Yarn D.** Ch 1, turn; hdc2tog, hdc in each st across	**(14 hdc)**
☐ **Row 32**	Ch 1, turn; hdc in each st across to last 2 sts, hdc2tog	**(13 hdc)**
☐ **Row 33**	**Yarn A.** Ch 1, turn; hdc2tog, hdc in each st across	**(12 hdc)**

For your own crochet, gifts and handmade pieces you sell. Do not resell or share this PDF.

☐ **Row 34**	Ch 1, turn; hdc in each st across to last 2 sts, hdc2tog	**(11 hdc)**
☐ **Row 35**	**Yarn B.** Ch 1, turn; hdc2tog, hdc in each st across	**(10 hdc)**
☐ **Row 36**	Ch 1, turn; hdc in each st across	**(10 hdc)**
☐ **End**	The 10 sts left are the shoulder. Fasten off.	

Cuff rib: make 2

Yarn A, sky.

☐ **Foundation**	With yarn A, ch 7.	
☐ **Row 1 (RS)**	Sc in 2nd ch from hook and in each ch across	**(6 sc)**
☐ **Rows 2 to 26**	Ch 1, turn; sc in back loop only of each st across	**(6 sc)**

A box for each row, 2 to 26: tick them off as you go.

☐ 2 ☐ 3 ☐ 4 ☐ 5 ☐ 6 ☐ 7 ☐ 8 ☐ 9 ☐ 10 ☐ 11 ☐ 12 ☐ 13 ☐ 14 ☐ 15 ☐ 16 ☐ 17 ☐ 18 ☐ 19 ☐ 20 ☐ 21 ☐ 22 ☐ 23 ☐ 24 ☐ 25 ☐ 26

☐ **End** Fasten off.

Sleeve: make 2

Yarns in order of use: A, sky; B, coral; C, lemon; D, fern.

Colors, counted from row 1: 2 rows yarn A, 2 rows yarn B, 2 rows yarn C, 2 rows yarn D; repeat these 8 rows to the end (the last repeat may stop part way).

☐ **Foundation**	Hold a cuff rib with one long edge at the top. Join yarn A at the right-hand end of that edge.	
☐ **Row 1 (RS)**	Ch 1, sc in the end of each rib row across	**(26 sc)**
☐ **Row 2**	Ch 1, turn; hdc in each st across	**(26 hdc)**
☐ **Row 3**	**Yarn B.** Ch 1, turn; 2 hdc in first st, hdc in each st across to last st, 2 hdc in last st	**(28 hdc)**
☐ **Row 4**	Ch 1, turn; hdc in each st across	**(28 hdc)**
☐ **Rows 5 to 6**	**Yarn C.** Ch 1, turn; hdc in each st across	**(28 hdc)**

A box for each row, 5 to 6: tick them off as you go.

☐ 5 ☐ 6

☐ **Row 7**	**Yarn D.** Ch 1, turn; 2 hdc in first st, hdc in each st across to last st, 2 hdc in last st	**(30 hdc)**
☐ **Row 8**	Ch 1, turn; hdc in each st across	**(30 hdc)**
☐ **Row 9**	**Yarn A.** Ch 1, turn; hdc in each st across	**(30 hdc)**
☐ **Row 10**	Ch 1, turn; hdc in each st across	**(30 hdc)**
☐ **Row 11**	**Yarn B.** Ch 1, turn; 2 hdc in first st, hdc in each st across to last st, 2 hdc in last st	**(32 hdc)**
☐ **Row 12**	Ch 1, turn; hdc in each st across	**(32 hdc)**
☐ **Row 13**	**Yarn C.** Ch 1, turn; hdc in each st across	**(32 hdc)**
☐ **Row 14**	Ch 1, turn; hdc in each st across	**(32 hdc)**
☐ **Row 15**	**Yarn D.** Ch 1, turn; 2 hdc in first st, hdc in each st across to last st, 2 hdc in last st	**(34 hdc)**
☐ **Row 16**	Ch 1, turn; hdc in each st across	**(34 hdc)**
☐ **Row 17**	**Yarn A.** Ch 1, turn; hdc in each st across	**(34 hdc)**

For your own crochet, gifts and handmade pieces you sell. Do not resell or share this PDF.

☐ **Row 18**	Ch 1, turn; hdc in each st across	**(34 hdc)**
☐ **Row 19**	**Yarn B.** Ch 1, turn; 2 hdc in first st, hdc in each st across to last st, 2 hdc in last st	**(36 hdc)**
☐ **Row 20**	Ch 1, turn; hdc in each st across	**(36 hdc)**
☐ **Row 21**	**Yarn C.** Ch 1, turn; hdc in each st across	**(36 hdc)**
☐ **Row 22**	Ch 1, turn; hdc in each st across	**(36 hdc)**
☐ **Rows 23 to 24**	**Yarn D.** Ch 1, turn; hdc in each st across	**(36 hdc)**

A box for each row, 23 to 24: tick them off as you go.

23 24

☐ **End**	The sleeve measures about 11 in (28 cm) across the top and 10½ in (26.5 cm) long. Fasten off.	

Neckband

Yarn A, sky.

Work this at step 2 under Assembly.

☐ **Foundation**	With the right side facing, join yarn A at the right shoulder seam (as worn).	
☐ **Rnd 1**	Ch 1, sc in each of the 28 open sts of the back neck, 9 sc evenly along the 8 row ends down the left side of the neck, sc in each of the 16 sts left at the front, 9 sc evenly along the 8 row ends up the right side; join with sl st in first sc	**(62 sc)**
☐ **Rnds 2 to 4**	Ch 1; sc in each st around; join with sl st in first sc	**(62 sc)**

A box for each round, 2 to 4: tick them off as you go.

2 3 4

☐ **End**	Fasten off.	

Assembly

1. Shoulders: lay the front on the back with right sides together. Sew the 10 sts at each end of the top edge together, and leave the middle 28 sts of the back open for the neck.

2. Neckband: work it now, as written above.

3. Sleeves: place a marker on each side edge of the body 5½ in (14 cm) below the shoulder seam (about 15 rows), front and back; this is half the top edge of the sleeve. With right sides together, put the middle of the top edge of a sleeve at each shoulder seam and sew the top edge to the body between the markers.

4. Sides and sleeves: sew each side seam from the marker down to the hem, and each sleeve seam from the underarm to the cuff edge.

Finishing

- Weave in all the ends. Wash as the yarn label says and lay flat to the measurements to dry.

In all: 11 pieces; 5,938 stitches (288 in each hem rib, 1,728 in the back, 1,344 in the front, 101 in the front, first side of the neck, 101 in the front, second side of the neck, 156 in each cuff rib, 764 in each sleeve, 248 in the neckband); 50 ends to weave in.

Found a mistake in this pattern? Tell us at flossfield.com, under Make a request.

For your own crochet, gifts and handmade pieces you sell. Do not resell or share this PDF.