Lacy baby dress with a fan skirt

6-12 months, to fit chest 18 in (45.5 cm) · US terms



Finished size
About 20 in (51 cm) at the chest and about 15½ in (39.5 cm) long
To fit a chest of 18 in (45.5 cm)

Skill
Intermediate
Fan and eyelet lace in rounds, simple shaping

Yarn
Fine (2), 2 colors

Hook
4 mm (US G-6)

Gauge
18 stitches and 9½ rows to 4 in (10 cm)
In double crochet (UK treble).

What you need

Yarn A: blush, main color — **about 350 yd (320 m), an estimate**
Yarn B: soft ivory, contrast — **about 95 yd (87 m), an estimate**

By weight: about 130 g in all, an estimate, where 100 g is 350 yd (320 m).

Hook: 4 mm (US G-6), or the size that gives you the gauge. Also: yarn needle, scissors, tape measure, 2 buttons, ½ in (12 mm) across and sewing thread and a sewing needle.

To find how many balls: divide by the length on your yarn's label and round up. Buy them from one dye lot. The estimate is from the stitches of this size at this gauge.

Sizes

Size	To fit chest	Yarn, an estimate	Chest	Length from the neckband	Yoke depth	Sleeve	Upper sleeve	Neck around (buttoned)	Back opening	Hem around
0-3 months	16 in (40.5 cm)	about 335 yd (306 m)	17¾ in (45 cm)	13 in (33 cm)	3¾ in (9.5 cm)	2½ in (6.5 cm)	7 in (18 cm)	11½ in (29 cm)	3½ in (9 cm)	26¾ in (68 cm)
3-6 months	17 in (43 cm)	about 390 yd (357 m)	19 in (48.5 cm)	14¼ in (36 cm)	4¼ in (11 cm)	2½ in (6.5 cm)	7½ in (19 cm)	12 in (30.5 cm)	3½ in (9 cm)	28½ in (72.5 cm)
6-12 months (this file)	**18 in (45.5 cm)**	**about 445 yd (407 m)**	**20 in (51 cm)**	**15½ in (39.5 cm)**	**4¾ in (12 cm)**	**2½ in (6.5 cm)**	**8 in (20.5 cm)**	**12½ in (32 cm)**	**3½ in (9 cm)**	**30¼ in (77 cm)**
12-18 months	19 in (48.5 cm)	about 500 yd (457 m)	21 in (53.5 cm)	17 in (43 cm)	5 in (12.5 cm)	3 in (7.5 cm)	8½ in (21.5 cm)	12¾ in (32.5 cm)	4¼ in (11 cm)	32 in (81.5 cm)

For your own crochet, gifts and handmade pieces you sell. Do not resell or share this PDF or copies of it.

18-24 months	20 in (51 cm)	about 580 yd (530 m)	22¼ in (56.5 cm)	18¼ in (46.5 cm)	5½ in (14 cm)	3¼ in (8.5 cm)	9 in (23 cm)	13¾ in (35 cm)	3½ in (9 cm)	33¾ in (85.5 cm)

Schematic

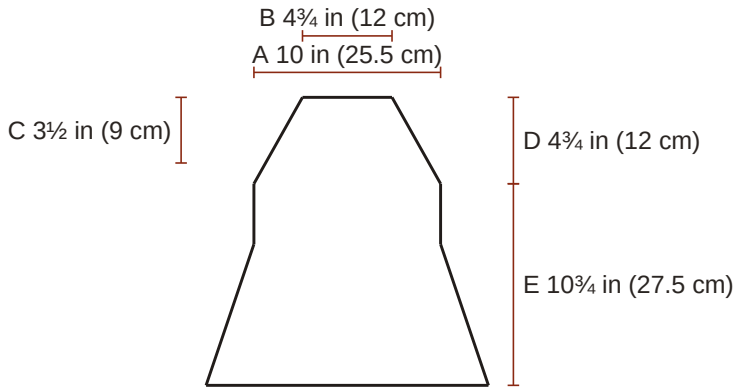

Body
A half the chest
B across the neck opening
C the back opening
D the yoke depth
E below the yoke

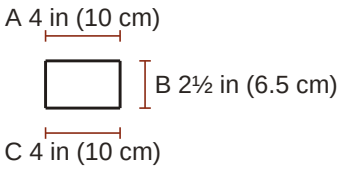

Sleeve, laid flat
A half the top of the sleeve
B the sleeve
C half the cuff

Gauge

18 stitches and 9½ rows to 4 in (10 cm) in double crochet.

> **The swatch.** A test piece to measure and pull out. It is not the start of the pattern. Ch 29; begin in the 3rd ch from the hook and work 14 rows of double crochet on 27 sts, about 6 in (15 cm) wide and 6 in (15 cm) high, and measure 4 in (10 cm) in the middle. Use a larger hook if your swatch is small, a smaller one if it is large. Fan skirt: 1 fan with its sc, worked over 8 sts, is about 1¾ in (4.5 cm) wide; the 4 rounds of one band of fans (fan round, chain round, dc round, eyelet round) are about 1½ in (4 cm) high.

Notes

- On a baby: sew every button on very firmly, and look at each one before every wear.
- The finished chest is from 1¾ in (4.5 cm) to 2¼ in (5.5 cm) wider than the body measurement, by the size. Choose by the finished measurement you like; no fit is promised beyond the measurements given.
- Worked from the neck down in one piece. The yoke begins at the middle of the back. Its first rows are worked flat, back and forth, for the back opening; row 1 is a right side row, and so is the last of them, which is joined into a ring. From there the rounds are not turned; the right side always faces you. The neckband and the edging of the opening are worked at the end.
- The rows and rounds begin at the middle of the back, so the first and the last section of each row or round are the two halves of the back.
- The neck is small, so that it stays on the shoulders; the head goes through the opening at the back, which fastens with two buttons.

For your own crochet, gifts and handmade pieces you sell. Do not resell or share this PDF or copies of it.

- The chain at the start of a round or row (ch 1 for single crochet, ch 2 for double crochet) never counts as a stitch. Work the first stitch into the stitch at its base. In the rows, work the last stitch into the last stitch of the row below, and never into the turning chain.
- A decrease counts as one stitch.
- At the underarms, work into each of the new chains as into a stitch on the next round. The sleeves are worked into the free side of these chains.
- An eyelet is a ch 1 over a skipped stitch. It counts as a stitch: in the next round work 1 stitch into it, with the hook in the space under the chain.
- A fan is the 7 tr worked in one stitch. In the round after the fans, the first dc goes into the first sc, at the base of the chain; pass over the tr of the fans that are not named.
- Color changes in rounds: work the sl st that joins the round before with the new yarn. Cut the old yarn, leaving an end of about 6 in (15 cm), or, if it is needed again within 6 rnds, carry it loosely up the inside at the join.

Instructions

6-12 months, to fit chest 18 in (45.5 cm). US terms.

ch chain, **sl st** slip stitch, **sc** single crochet (UK double crochet), **dc** double crochet (UK treble), **tr** treble crochet (UK double treble), **Rnd** round, **st** stitch, **sp** space.

RS right side, the one that shows, **WS** wrong side, the back.

2 dc in next st: both in one stitch. **dc in next 2 sts**: one in each. **ch-3 sp**: the gap under three chains; the hook goes in the gap.

[ ] 12 times: work what is inside 12 times in all.

(54 dc): the stitches you have when the row is done. **How to read a pattern**.

Special stitches

sc2tog (single crochet 2 stitches together (UK double crochet 2 together)): Insert the hook in the next stitch and pull up a loop, insert the hook in the following stitch and pull up a loop (3 loops on the hook); yarn over and pull through all 3 loops.

Yoke, back opening

Yarn A, blush.

☐ **Foundation**	In this size the front has 2 sts more than the back. With yarn A, ch 56.	
☐ **Row 1 (RS)**	Dc in 3rd ch from hook and in each ch across	(54 dc)
☐ **Row 2**	Ch 2, turn; dc in next st, **[**2 dc in next st, dc in next st**] 12 times**, **[**2 dc in next st, dc in next 2 sts**] 9 times**, 2 dc in next st, dc in next st	(76 dc)
☐ **Row 3**	Ch 2, turn; dc in each st across	(76 dc)
☐ **Row 4**	Ch 2, turn; dc in next st, **[**2 dc in next st, dc in next 2 sts**] 20 times**, **[**2 dc in next st, dc in next 3 sts**] 3 times**, 2 dc in next st, dc in next 2 sts	(100 dc)
☐ **Row 5**	Ch 2, turn; dc in each st across	(100 dc)
☐ **Row 6**	Ch 2, turn; dc in next 3 sts, **[**2 dc in next st, dc in next 3 sts**] 20 times**, **[**2 dc in next st, dc in next 4 sts**] 3 times**, 2 dc in next st, dc in next st	(124 dc)
☐ **Row 7**	Ch 2, turn; dc in each st across	(124 dc)
☐ **End**	Do not fasten off.	

For your own crochet, gifts and handmade pieces you sell. Do not resell or share this PDF or copies of it.

Yoke

Yarn A, blush.

☐ **Foundation**	Go on from row 7 of the back opening, a right side row. Do not turn. With the right side facing, join the row into a ring with a sl st in its first dc, so that the right side is outward. From here the yoke is worked in rounds.	
☐ **Rnd 8**	Ch 2; dc in next 2 sts, **[**2 dc in next st, dc in next 4 sts**] 8 times**, **[**2 dc in next st, dc in next 5 sts**] 13 times**, 2 dc in next st, dc in next 3 sts; join with sl st in first dc	(146 dc)
☐ **Rnds 9 to 11** 9 10 11	Ch 2; dc in each st around; join with sl st in first dc	(146 dc)
☐ **End**	Do not fasten off.	

Body and skirt

Yarn A, blush.

☐ **Foundation**	Go on from rnd 11 of the yoke. Colors: rnds 12 to 33 yarn A; rnds 34 to 38 yarn B.	
☐ **Rnd 12**	Ch 2; dc in next 20 sts, ch 4 (underarm), skip next 32 sts (one sleeve), dc in next 42 sts, ch 4 (underarm), skip next 32 sts (one sleeve), dc in next 20 sts; join with sl st in first dc	(82 dc, 8 ch)
☐ **Rnds 13 to 14** 13 14	Ch 2; dc in each st around; join with sl st in first dc	(90 dc)
☐ **Rnd 15**	Ch 2; **[**dc in next st, ch 1 (eyelet), skip next st**] 45 times**; join with sl st in first dc	(45 dc, 45 ch)
☐ **Rnd 16**	Ch 1; sc in each st around; join with sl st in first sc	(90 sc)
☐ **Rnd 17**	Ch 2; [2 dc in next st] twice, **[**dc in next st, 2 dc in next st**] 44 times**; join with sl st in first dc	(136 dc)
☐ **Rnd 18**	Ch 1; **[**sc in next st, skip next 3 sts, 7 tr in next st, skip next 3 sts**] 17 times**; join with sl st in first sc	(17 sc, 119 tr)
☐ **Rnd 19**	Ch 2; **[**dc in next sc, ch 3, sc in the 4th tr of next fan, ch 3**] 17 times**; join with sl st in first dc	(17 dc, 34 ch-3 sps, 17 sc)
☐ **Rnd 20**	Ch 2; **[**dc in next st, 3 dc in next ch-3 sp**] 34 times**; join with sl st in first dc	(136 dc)
☐ **Rnd 21**	Ch 2; **[**dc in next st, ch 1 (eyelet), skip next st**] 68 times**; join with sl st in first dc	(68 dc, 68 ch)
☐ **Rnds 22 to 33** 22 23 24 25 26 27 28 29 30 31 32 33	Repeat Rnds 18 to 21, 3 more times	(68 dc, 68 ch)
☐ **Rnds 34 to 37** 34 35 36 37	Ch 2; dc in each st around; join with sl st in first dc	(136 dc)

For your own crochet, gifts and handmade pieces you sell. Do not resell or share this PDF or copies of it.

☐ **Rnd 38**	Ch 1; **[**sc in next st, skip next 3 sts, 9 dc in next st, skip next 3 sts**] 17 times**; join with sl st in first sc	(17 sc, 153 dc)
☐ **End**	Fasten off.	

Sleeve: make 2

Yarn A, blush.

☐ **Foundation**	Colors: rnds 1 to 5 yarn A; rnd 6 yarn B. With the right side facing, join yarn A in the left one of the two middle chs of an underarm; ch 2, dc in that ch and in the next underarm ch, dc in each of the 32 sleeve sts and dc in each of the 2 underarm chs left (36 dc); join with sl st in first dc. This is rnd 1.	
☐ **Rnds 2 to 5** 2 3 4 5	Ch 2; dc in each st around; join with sl st in first dc	(36 dc)
☐ **Rnd 6**	Ch 1; **[**sc in next st, skip next 2 sts, 5 dc in next st, skip next 2 sts**] 6 times**; join with sl st in first sc	(6 sc, 30 dc)
☐ **End**	Fasten off.	

Neckband

Yarn B, soft ivory.

☐ **Foundation**	The neckband is not joined. With the right side facing and the foundation chain uppermost, join yarn B in the first ch made, at the left back edge of the opening (as worn), under the last dc of row 1; ch 1, sc in each ch across (54 sc), to the right back edge; the 2 chs skipped at the start of row 1 are left. This is row 1.	
☐ **Rows 2 to 3** 2 3	Ch 1, turn; sc in each st across	(54 sc)
☐ **End**	Fasten off.	

Opening edging

Yarn B, soft ivory.

☐ **Foundation**	With the right side facing, join yarn B at the neck end of the right back edge of the opening (as worn); ch 1, sc in the end of each of the 3 neckband rows, 2 sc in the end of each of the 7 rows of the opening down to its foot; then go straight on up the left back edge, 2 sc in the end of each of the 7 rows of the opening and sc in the end of each of the 3 neckband rows (34 sc). This is row 1.	
☐ **Row 2 (WS)**	Ch 1, turn; sc in next 16 sts, sc2tog, sc in next 7 sts, ch 3, skip next st, sc in next 6 sts, ch 3, skip next st, sc in next st	(31 sc, 2 ch-3 sps)
☐ **End**	Row 2 goes down the left back edge and up the right back edge; the sc2tog turns it at the foot of the opening, and the 2 ch-3 sps are the button loops, the last of them at the neck. No row is worked into them. Fasten off.	

For your own crochet, gifts and handmade pieces you sell. Do not resell or share this PDF or copies of it.

Waist cord

Yarn B, soft ivory.

☐ **Foundation**	With yarn B, ch 177.	
☐ **Row 1**	Sl st in 2nd ch from hook and in each ch across	(176 sl sts)
☐ **End**	The waist cord is about 34 in (86.5 cm) long (the slip stitches draw the chain in). Fasten off.	

Assembly

1. Close any small gaps at the underarms with the yarn ends there.

2. Opening: lay the edging of the right back over the edging of the left back and sew its lower end down with a few stitches at the foot of the opening. Mark the place under each loop on the left back, where the edging meets the yoke or the neckband, and sew the 2 buttons there with the sewing thread, so that the loops go over them without pulling. The buttons must hold a child's pull: sew each one on, fasten the thread off, and sew through it a second time with a new thread. A loose button is a danger to a baby: see that each one is firm before every wear.

3. Waist cord: rnd 15 of the body has 45 eyelets, counted from the join at the middle of the back; eyelet 23 is the middle of the front and stays empty. With the right side facing, take one end of the cord in from the outside to the inside through eyelet 24, out through eyelet 25, and on in this way, in and out through every eyelet around the back and to the front again; the last time it comes out through eyelet 22. Draw the two ends to the same length and tie them in a flat bow on the outside, at the middle of the front, with loops about 1¼ in (3 cm) long and ends of about 3 in (7.5 cm). With yarn B sew through the knot and into the dress 6 times or more, so that the bow cannot come undone and the ends stay short.

Finishing

- Weave in all the ends. Wash as the yarn label says and lay flat to the measurements to dry.

In all: 2 pieces; 5,287 stitches (654 in the yoke, back opening, 584 in the yoke, 3,374 in the body and skirt, 180 in each sleeve, 108 in the neckband, 31 in the opening edging, 176 in the waist cord).

Found a mistake in this pattern? Tell us at flossfield.com, under Make a request.

For your own crochet, gifts and handmade pieces you sell. Do not resell or share this PDF or copies of it.