Ladybug baby outfit

3-6 months, to fit waist 17½ in (44.5 cm) · US terms



Finished size

About 15 in (38 cm) at the hat and about 6 in (15 cm) at the hat from crown to edge

To fit a waist of 17½ in (44.5 cm) and a hip of 18 in (45.5 cm), head 16½ in (42 cm)

Skill

Easy

Basic stitches, simple shaping and two short seams

Yarn

Light (3), 2 colors

Hook

4.5 mm (US 7)

Gauge

16 stitches and 13½ rows to 4 in (10 cm)

In half double crochet (UK half treble).

What you need

Yarn A: poppy red, main color **about 225 yd (206 m), an estimate**

Yarn B: soft black, contrast **about 115 yd (105 m), an estimate**

By weight: about 140 g in all, an estimate, where 100 g is 250 yd (229 m).

Hook: 4.5 mm (US 7), or the size that gives you the gauge. Also: yarn needle, scissors, tape measure and a little fiberfill stuffing.

To find how many balls: divide by the length on your yarn's label and round up. Buy them from one dye lot. The estimate is from the stitches of this size at this gauge.

Sizes

Size	Waist	Yarn, an estimate	Hat around	Hat from crown to edge	Cover around the hip	Around the waistband	Front waist to the middle of the crotch	Back waist to the middle of the crotch	Around each leg opening
Newborn	13½ in (34.5 cm)	about 230 yd (210 m)	13 in (33 cm)	5 in (12.5 cm)	17 in (43 cm)	15 in (38 cm)	5¼ in (13.5 cm)	5¾ in (14.5 cm)	7 in (18 cm)
0-3 months	16½ in (42 cm)	about 285 yd (261 m)	14 in (35.5 cm)	5½ in (14 cm)	20 in (51 cm)	18 in (45.5 cm)	6½ in (16.5 cm)	7½ in (19 cm)	8 in (20.5 cm)
3-6 months (this file)	**17½ in (44.5 cm)**	**about 340 yd (311 m)**	**15 in (38 cm)**	**6 in (15 cm)**	**21 in (53.5 cm)**	**19 in (48.5 cm)**	**7 in (18 cm)**	**8¼ in (21 cm)**	**8½ in (21.5 cm)**
6-12 months	18½ in (47 cm)	about 365 yd (334 m)	16 in (40.5 cm)	6¼ in (16 cm)	22 in (56 cm)	20 in (51 cm)	7¼ in (18.5 cm)	8½ in (21.5 cm)	9 in (23 cm)

For your own crochet, gifts and handmade pieces you sell. Do not resell or share this PDF or copies of it.

Schematic

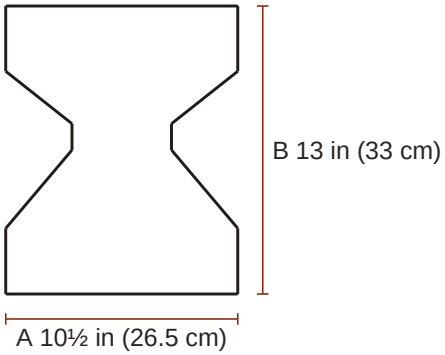

Cover
A half the cover the hip
B from top to bottom

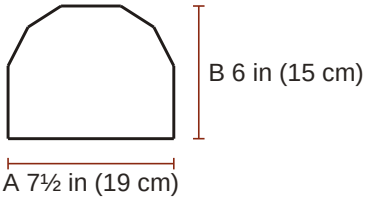

Hat, laid flat
A half the hat
B the hat from crown to edge

Gauge

16 stitches and 13½ rows to 4 in (10 cm) in half double crochet.

> **The swatch.** A test piece to measure and pull out. It is not the start of the pattern. Ch 25; begin in the 2nd ch from the hook and work 20 rows of half double crochet on 24 sts, about 6 in (15 cm) wide and 6 in (15 cm) high, and measure 4 in (10 cm) in the middle. Use a larger hook if your swatch is small, a smaller one if it is large. Edgings: 16 sts to 4 in (10 cm) in double crochet (UK: treble); one round of single crochet, one of double crochet and one of post stitches are about 1 1/8 in (2.9 cm) high together. Hat: the rounds have the same gauge as the rows of the cover. Dots and feelers: single crochet (UK: double crochet), about 18½ rounds to 4 in (10 cm); work them firmly.

Notes

- The hat is ½ to 1½ in (1 to 4 cm) smaller around than the head it is for, and stretches. The hip of the cover is 3 in (7.5 cm) wider than the body measurement at each size, to go over a diaper (UK: nappy). Choose by the finished measurement you like; no fit is promised beyond the measurements given.
- The cover is worked in rows that are turned. The ch 1 at the start of a row never counts as a stitch: work the first stitch of the row into the first stitch, at the base of the ch 1.
- The waistband and the leg edgings are worked in rounds that are not turned; the right side always faces you. The chain at the start of a round never counts as a stitch: work the first stitch into the stitch at its base.
- A decrease counts as one stitch.
- The rounds of the hat, the dots and the feelers are not turned either. The hat is worked from the crown down.
- Sew every part on firmly, through the fabric several times, weave the ends in well, and look at them before each wear. The hat is for a baby who is awake and watched; take it off for sleep.
- To work a post stitch around a dc2tog, take the hook around both of its legs together.
- Color changes in rounds: work the sl st that joins the round before with the new yarn. Cut the old yarn, leaving an end of about 6 in (15 cm), or, if it is needed again within 6 rnds, carry it loosely up the inside at the join.
- Whip stitch: hold the two edges together, put the needle through both from back to front, bring the yarn over the edges and go in again from the back, one stitch along.

For your own crochet, gifts and handmade pieces you sell. Do not resell or share this PDF or copies of it.

Instructions

3-6 months, to fit waist 17½ in (44.5 cm). US terms.

ch chain, **sl st** slip stitch, **sc** single crochet (UK double crochet), **hdc** half double crochet (UK half treble), **dc** double crochet (UK treble), **Rnd** round, **st** stitch.
RS right side, the one that shows.
2 hdc in next st: both in one stitch. **hdc in each of next 8 sts**: one in each.
[ ] 8 times: work what is inside 8 times in all.
(8 hdc): the stitches you have when the round is done. **How to read a pattern**.

Special stitches

sc2tog (single crochet 2 stitches together (UK double crochet 2 together)): Insert the hook in the next stitch and pull up a loop, insert the hook in the following stitch and pull up a loop (3 loops on the hook); yarn over and pull through all 3 loops.

hdc2tog (half double crochet 2 stitches together (UK half treble 2 together)): [yarn over, insert the hook in the next stitch and pull up a loop] twice (5 loops on the hook); yarn over and pull through all 5 loops.

dc2tog (double crochet 2 stitches together (UK treble 2 together)): [yarn over, insert the hook in the next stitch and pull up a loop, yarn over and pull through 2 loops] twice (3 loops on the hook); yarn over and pull through all 3 loops.

fpdc (front post double crochet (UK front post treble)): Yarn over, insert the hook from the front to the back and to the front again around the post of the stitch named, pull up a loop, [yarn over and pull through 2 loops] twice. The front is the side that faces you. A post stitch takes the place of the stitch it is worked around: do not work into the top of that stitch as well.

bpdc (back post double crochet (UK back post treble)): As fpdc, but insert the hook from the back to the front and to the back again around the post.

Hat

Yarn A, poppy red.

☐ **Foundation**	With yarn A, ch 3; join with sl st in first ch to form a ring. Colors: rnds 1 to 16 yarn A; rnds 17 to 19 yarn B.	
☐ **Rnd 1**	Ch 1; 8 hdc in ring; join with sl st in first hdc	(8 hdc)
☐ **Rnd 2**	Ch 1; 2 hdc in each of next 8 sts; join with sl st in first hdc	(16 hdc)
☐ **Rnd 3**	Ch 1; **[**hdc in next st, 2 hdc in next st**] 8 times**; join with sl st in first hdc	(24 hdc)
☐ **Rnd 4**	Ch 1; **[**hdc in next 2 sts, 2 hdc in next st**] 8 times**; join with sl st in first hdc	(32 hdc)
☐ **Rnd 5**	Ch 1; **[**hdc in next 3 sts, 2 hdc in next st**] 8 times**; join with sl st in first hdc	(40 hdc)
☐ **Rnd 6**	Ch 1; hdc in each st around; join with sl st in first hdc	(40 hdc)
☐ **Rnd 7**	Ch 1; hdc in next 2 sts, **[**2 hdc in next st, hdc in next 4 sts**] 7 times**, 2 hdc in next st, hdc in next 2 sts; join with sl st in first hdc	(48 hdc)
☐ **Rnd 8**	Ch 1; hdc in each st around; join with sl st in first hdc	(48 hdc)
☐ **Rnd 9**	Ch 1; **[**hdc in next 5 sts, 2 hdc in next st**] 8 times**; join with sl st in first hdc	(56 hdc)
☐ **Rnd 10**	Ch 1; hdc in each st around; join with sl st in first hdc	(56 hdc)
☐ **Rnd 11**	Ch 1; hdc in next 7 sts, **[**2 hdc in next st, hdc in next 13 sts**] 3 times**, 2 hdc in next st, hdc in next 6 sts; join with sl st in first hdc	(60 hdc)

For your own crochet, gifts and handmade pieces you sell. Do not resell or share this PDF or copies of it.

☐ **Rnds 12 to 16** 12 13 14 15 16	Ch 1; hdc in each st around; join with sl st in first hdc	(60 hdc)
☐ **Rnd 17**	Ch 2; dc in each st around; join with sl st in first dc	(60 dc)
☐ **Rnds 18 to 19** 18 19	Ch 2; **[**fpdc around next st, bpdc around next st**] 30 times**; join with sl st in first fpdc	(30 fpdcs, 30 bpdcs)
☐ **End**	Fasten off.	

Cover

Yarn A, poppy red.

☐ **Foundation**	The cover is one piece: it begins at the front waist, goes down to the crotch and up again to the back waist. Rows 1 to 10 are the front, above the legs; rows 11 to 18 shape the front leg edges; rows 19 to 22 are the crotch; rows 23 to 34 shape the back leg edges; rows 35 to 44 are the back, above the legs. With yarn A, ch 43.	
☐ **Row 1 (RS)**	Hdc in 2nd ch from hook and in each ch across	(42 hdc)
☐ **Rows 2 to 10** 2 3 4 5 6 7 8 9 10	Ch 1, turn; hdc in each st across	(42 hdc)
☐ **Rows 11 to 14** 11 12 13 14	Ch 1, turn; hdc2tog twice, hdc in each st across to last 4 sts, hdc2tog twice	(26 hdc)
☐ **Rows 15 to 18** 15 16 17 18	Ch 1, turn; hdc2tog, hdc in each st across to last 2 sts, hdc2tog	(18 hdc)
☐ **Rows 19 to 22** 19 20 21 22	Ch 1, turn; hdc in each st across	(18 hdc)
☐ **Rows 23 to 26** 23 24 25 26	Ch 1, turn; 2 hdc in each of next 2 sts, hdc in each st across to last 2 sts, 2 hdc in each of next 2 sts	(34 hdc)
☐ **Row 27**	Ch 1, turn; hdc in each st across	(34 hdc)
☐ **Row 28**	Ch 1, turn; 2 hdc in next st, hdc in each st across to last st, 2 hdc in next st	(36 hdc)
☐ **Rows 29 to 34** 29 30 31 32 33 34	Repeat Rows 27 and 28, 3 more times (38, 40, 42 hdc at the ends of the repeats)	(42 hdc)
☐ **Rows 35 to 44** 35 36 37 38 39 40 41 42 43 44	Ch 1, turn; hdc in each st across	(42 hdc)
☐ **End**	Fasten off, leaving an end of about 12 in (30 cm) for sewing. Side seams: fold the piece at the crotch, right sides together, so that the foundation chain lies along row 44. At each side sew the ends of rows 1 to 10 to the ends of rows 44 to 35, row 1 to row 44 and row 10 to row 35, with the long end at one side and a new length of yarn A at the other. Turn the right side out.	

For your own crochet, gifts and handmade pieces you sell. Do not resell or share this PDF or copies of it.

Waistband

Yarn B, soft black.

☐ **Foundation**	With the right side facing and the waist uppermost, join yarn B at the right side seam (as worn); ch 1, beginning in the st next to the seam, sc in each of the 42 sts of row 44 of the cover piece, across the back, then sc in each of the 42 chs of the foundation chain of the cover piece, along their free side, across the front (84 sc); the ch skipped at the start of row 1 stays free; join with sl st in first sc. This is rnd 1.	
☐ **Rnd 2**	Ch 2; **[**dc in next 8 sts, dc2tog**] 4 times**, **[**dc in next 9 sts, dc2tog**] 4 times**; join with sl st in first dc	(76 dc)
☐ **Rnd 3**	Ch 2; **[**fpdc around next st, bpdc around next st**] 38 times**; join with sl st in first fpdc	(38 fpdcs, 38 bpdcs)
☐ **End**	Fasten off.	

Leg edging: make 2

Yarn B, soft black.

☐ **Foundation**	With the right side facing, join yarn B at the lower end of a side seam; ch 2, work along the leg edge, in the ends of the 24 rows that go from this seam down to the crotch and up again to this seam (at the right side seam, as worn, from row 11 to row 34; at the left side seam from row 34 to row 11): [dc in the end of each of next 2 rows, 2 dc in the end of next row] 4 times, [dc in the end of next row, 2 dc in the end of next row] 6 times (34 dc); join with sl st in first dc. This is rnd 1.	
☐ **Rnd 2**	Ch 2; **[**fpdc around next st, bpdc around next st**] 17 times**; join with sl st in first fpdc	(17 fpdcs, 17 bpdcs)
☐ **End**	Fasten off. Work the second leg edging in the same way at the other side seam.	

Dot: make 17

Yarn B, soft black.

☐ **Foundation**	With yarn B, ch 3; join with sl st in first ch to form a ring.	
☐ **Rnd 1**	Ch 1; 6 sc in ring; join with sl st in first sc	(6 sc)
☐ **Rnd 2**	Ch 1; 2 sc in each of next 6 sts; join with sl st in first sc	(12 sc)
☐ **Rnd 3**	Ch 1; **[**sc in next st, 2 sc in next st**] 6 times**; join with sl st in first sc	(18 sc)
☐ **End**	The dot is about 1¼ in (3 cm) across. Fasten off, leaving an end of about 12 in (30 cm) for sewing.	

Feeler: make 2

Yarn B, soft black.

☐ **Foundation**	Rnds 1 to 5 are the ball, rnds 6 to 13 the stalk. Stop after rnd 5 and stuff the ball firmly with fiberfill; then work rnd 6. With yarn B, ch 3; join with sl st in first ch to form a ring.	
☐ **Rnd 1**	Ch 1; 6 sc in ring; join with sl st in first sc	(6 sc)

For your own crochet, gifts and handmade pieces you sell. Do not resell or share this PDF or copies of it.

☐ **Rnd 2**	Ch 1; 2 sc in each of next 6 sts; join with sl st in first sc	(12 sc)
☐ **Rnds 3 to 4** 3 4	Ch 1; sc in each st around; join with sl st in first sc	(12 sc)
☐ **Rnd 5**	Ch 1; sc2tog 6 times; join with sl st in first sc2tog	(6 sc)
☐ **Rnds 6 to 13** 6 7 8 9 10 11 12 13	Ch 1; sc in each st around; join with sl st in first sc	(6 sc)
☐ **End**	Fasten off, leaving an end of about 12 in (30 cm) for sewing. Push a little fiberfill down into the stalk with the blunt end of the yarn needle. Leave the end of the stalk open.	

Assembly

1. Hat dots: the rnds of the hat are counted from the crown, and the sts of a rnd from its first st, at the middle of the back. Sew 7 dots to the outside of the hat, each with its own end, with whip stitch all round. The middles of 3 dots lie on rnd 7: one between sts 24 and 25 (the middle of the front), one over st 7 and one over st 42 (the two sides of the back). The middles of 4 dots lie on rnd 13: one over each of sts 8, 22, 39 and 53.

2. Feelers: sew the open end of a feeler to rnd 3 of the hat, with its middle over st 6, and the open end of the other with its middle over st 19, all round, with the ends of yarn. They stand up at the two sides of the crown. Sew each one on a second time with a new length of yarn B.

3. Wing line: lay the cover with its back up and the waist uppermost. The middle of the back lies between sts 21 and 22 of row 44. With a doubled length of yarn B embroider a line of chain stitch straight down the middle, from the waistband to row 22, one chain stitch to each row. Chain stitch: bring the needle up, put it in again at the same place with the yarn held in a loop, bring it up one row further on inside the loop, and draw up; go on from there, and end with a short stitch over the last loop.

4. Cover dots: sew 6 dots to the back and 4 to the front, each with its own end, with whip stitch all round. The places are counted out from the middle of a row, to the left and to the right alike, and the middle of a dot lies there. Back: on row 40, 6 sts out from the middle; on row 35, 14 sts out; on row 30, 6 sts out. Front (rows counted from the foundation chain, at the front waist): on row 5, 6 sts out; on row 9, 14 sts out.

Finishing

- Weave in all the ends. Wash as the yarn label says and lay flat to the measurements to dry.

In all: 20 pieces.

Found a mistake in this pattern? Tell us at flossfield.com, under Make a request.

For your own crochet, gifts and handmade pieces you sell. Do not resell or share this PDF or copies of it.