Men's bikini swim briefs

M, to fit waist 33 in (84 cm) · US terms



Finished size

About 37¾ in (96 cm) at the hips and about 3 in (7.5 cm) at the side, casing top to lower edge of leg

To fit a waist of 33 in (84 cm) and a hip of 40 in (101.5 cm)

Skill

Intermediate

Basic stitches in rows and rounds, shaping at both edges and in the middle, two seams, leg elastic

Yarn

Fine (2), 2 colors

Hook

4 mm (US G-6)

Gauge

18 stitches and 21 rows to 4 in (10 cm)

In single crochet (UK double crochet).

What you need

Yarn A: black, main color — **about 300 yd (274 m), an estimate**

Yarn B: turquoise, contrast — **about 115 yd (105 m), an estimate**

By weight: about 120 g in all, an estimate, where 100 g is 350 yd (320 m).

Hook: 4 mm (US G-6), or the size that gives you the gauge. Also: yarn needle, scissors, tape measure, about ¾ yd (0.7 m) of stretch swimsuit lining at least 56 in (142 cm) wide (enough for every size), sewing thread and a sewing needle, pins, about 1½ yd (1.4 m) of swimwear elastic ¼ in (6 mm) wide (enough for every size) and a safety pin.

To find how many balls: divide by the length on your yarn's label and round up. Buy them from one dye lot. The estimate is from the stitches of this size at this gauge.

Sizes

Size	Waist	Yarn, an estimate	Around the hips	Side, casing top to lower edge of leg	Front from top to middle of crotch	Back from top to middle of crotch	Crotch across, with the bindings	Around each leg opening
S	29 in (73.5 cm)	about 380 yd (347 m)	34¼ in (87 cm)	3 in (7.5 cm)	8½ in (21.5 cm)	11¼ in (28.5 cm)	4 in (10 cm)	20½ in (52 cm)
M (this file)	**33 in (84 cm)**	**about 415 yd (379 m)**	**37¾ in (96 cm)**	**3 in (7.5 cm)**	**8¾ in (22 cm)**	**11¼ in (28.5 cm)**	**4 in (10 cm)**	**21¾ in (55 cm)**
L	37 in (94 cm)	about 445 yd (407 m)	41¼ in (105 cm)	3 in (7.5 cm)	9 in (23 cm)	11¾ in (30 cm)	4½ in (11.5 cm)	23 in (58.5 cm)
XL	41 in (104 cm)	about 505 yd (462 m)	45 in (114.5 cm)	3 in (7.5 cm)	9½ in (24 cm)	12 in (30.5 cm)	4½ in (11.5 cm)	25 in (63.5 cm)
2X	45 in (114.5 cm)	about 540 yd (494 m)	48½ in (123 cm)	3 in (7.5 cm)	9½ in (24 cm)	12¼ in (31 cm)	5 in (12.5 cm)	26¼ in (66.5 cm)

For your own crochet, gifts and handmade pieces you sell. Do not resell or share this PDF or copies of it.

Schematic

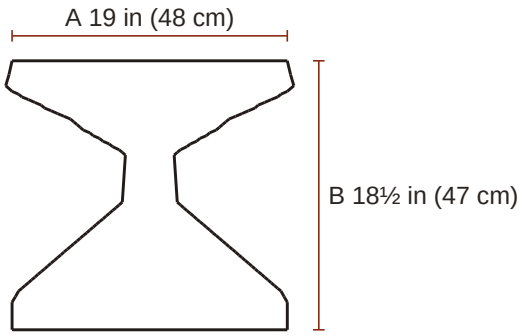

Brief
A half the way around the hips
B from top to bottom

Gauge

18 stitches and 21 rows to 4 in (10 cm) in single crochet.

> **The swatch.** A test piece to measure and pull out. It is not the start of the pattern. Ch 28; begin in the 2nd ch from the hook and work 32 rows of single crochet on 27 sts, about 6 in (15 cm) wide and 6 in (15 cm) high, and measure 4 in (10 cm) in the middle. Use a larger hook if your swatch is small, a smaller one if it is large. Leg edgings and waist casing: a round of single crochet is as high as a row.

Notes

- Men's sizes, by waist and hip. The top edge lies about 3½ in (9 cm) below the natural waist.
- Around the hips the brief is from 1¾ in (4.5 cm) to 3½ in (9 cm) smaller than the body, by the size, and the fabric stretches to it. No fit is promised beyond the measurements given.
- The turning chain (ch 1 for single crochet) never counts as a stitch. Work the first stitch of every row into the first stitch, at the base of the turning chain.
- The ch that is skipped at the start of row 1 is never counted, and nothing is worked into it later.
- The chain at the start of a round never counts as a stitch. Work the first stitch of the round into the stitch at its base, where the round was joined.
- A decrease counts as one stitch.
- Left and right are those of the person who wears the brief.
- Odd-numbered rows of the brief are right side rows.
- Mattress stitch: lay the two edges side by side with the right side up; with the yarn needle go under two strands at the side of a row end of one edge, then under two strands of the row end across from it, and so on, and draw the yarn up until the edges meet.

For your own crochet, gifts and handmade pieces you sell. Do not resell or share this PDF or copies of it.

- Lining: when the brief is worked and before its side seams are sewn, lay the brief flat with the wrong side up, the greater stretch of the lining from side to side, and cut two pieces of stretch swimsuit lining, each ½ in (1.5 cm) larger all around than what it lines: one for the whole piece, and one for the front and the crotch, which is the piece from its foundation chain to the last row of the crotch. Turn ¾ in (2 cm) of it under all around, toward the crochet, and pin it to the wrong side, so that the fold lies about ¼ in (0.5 cm), which is one st or one row, in from every edge of what it lines; at the middle of the front, between the darts, let the lining be a little full, so that it goes into the hollow. Where an edge curves inward, snip the part that is turned under so that it lies flat. Sew the fold down with small slanting stitches of sewing thread that do not show on the right side, and stretch the piece a little as you sew. Sew the large lining first and the lining of the front over it in the same way: the front is then lined twice, and across the end of the crotch the fold of the second lining lies along the last row of the crotch. Without a lining the fabric shows what is under it.
- Cotton takes up water: wet, it grows heavier and longer and it dries slowly. A cotton with some elastic in it, whose label says that it is fit for swimwear, keeps its length better. Rinse out salt or chlorine and dry the piece flat, not hanging.
- In back loop only: insert the hook under the loop of the stitch that is farther from you, and leave the nearer loop free.

Instructions

M, to fit waist 33 in (84 cm). US terms.

ch chain, **sl st** slip stitch, **sc** single crochet (UK double crochet), **Rnd** round, **st** stitch, **sp** space.
RS right side, the one that shows.
2 sc in next st: both in one stitch. **sc in next 38 sts**: one in each. **ch-1 sp**: the gap under the one chain; the hook goes in the gap.
(85 sc): the stitches you have when the row is done. **How to read a pattern**.

Special stitches

sc2tog (single crochet 2 stitches together (UK double crochet 2 together)): Insert the hook in the next stitch and pull up a loop, insert the hook in the following stitch and pull up a loop (3 loops on the hook); yarn over and pull through all 3 loops.

Brief

Yarn A, black.

☐ **Foundation**	With yarn A, ch 86.	
☐ **Row 1 (RS)**	Sc in 2nd ch from hook and in each ch across	(85 sc)
☐ **Rows 2 to 4** 2 3 4	Ch 1, turn; sc in each st across	(85 sc)
☐ **Row 5**	Ch 1, turn; sc in next 38 sts, 2 sc in next st, sc in next 7 sts, 2 sc in next st, sc in each st across	(87 sc)
☐ **Rows 6 to 8** 6 7 8	Ch 1, turn; sc in each st across	(87 sc)
☐ **Row 9**	Ch 1, turn; sc in next 38 sts, 2 sc in next st, sc in next 9 sts, 2 sc in next st, sc in each st across	(89 sc)
☐ **Row 10**	Ch 1, turn; sc in each st across	(89 sc)
☐ **Rows 11 to 12** 11 12	Ch 1, turn; sc2tog twice, sc in each st across to last 4 sts, sc2tog twice	(81 sc)

For your own crochet, gifts and handmade pieces you sell. Do not resell or share this PDF or copies of it.

☐ **Row 13**	Ch 1, turn; sc2tog twice, sc in next 30 sts, 2 sc in next st, sc in next 11 sts, 2 sc in next st, sc in each st across to last 4 sts, sc2tog twice	(79 sc)
☐ **Rows 14 to 16** 14 15 16	Ch 1, turn; sc2tog twice, sc in each st across to last 4 sts, sc2tog twice	(67 sc)
☐ **Row 17**	Ch 1, turn; sc2tog twice, sc in next 22 sts, 2 sc in next st, sc in next 13 sts, 2 sc in next st, sc in each st across to last 4 sts, sc2tog twice	(65 sc)
☐ **Rows 18 to 21** 18 19 20 21	Ch 1, turn; sc2tog twice, sc in each st across to last 4 sts, sc2tog twice	(49 sc)
☐ **Rows 22 to 25** 22 23 24 25	Ch 1, turn; sc2tog, sc in each st across to last 2 sts, sc2tog	(41 sc)
☐ **Row 26**	Ch 1, turn; sc2tog, sc in next 10 sts, sc2tog, sc in next 13 sts, sc2tog, sc in each st across to last 2 sts, sc2tog	(37 sc)
☐ **Row 27**	Ch 1, turn; sc2tog, sc in each st across to last 2 sts, sc2tog	(35 sc)
☐ **Row 28**	Ch 1, turn; sc2tog, sc in next 8 sts, sc2tog, sc in next 11 sts, sc2tog, sc in each st across to last 2 sts, sc2tog	(31 sc)
☐ **Row 29**	Ch 1, turn; sc2tog, sc in each st across to last 2 sts, sc2tog	(29 sc)
☐ **Row 30**	Ch 1, turn; sc2tog, sc in next 6 sts, sc2tog, sc in next 9 sts, sc2tog, sc in each st across to last 2 sts, sc2tog	(25 sc)
☐ **Row 31**	Ch 1, turn; sc2tog, sc in each st across to last 2 sts, sc2tog	(23 sc)
☐ **Row 32**	Ch 1, turn; sc2tog, sc in next 4 sts, sc2tog, sc in next 7 sts, sc2tog, sc in each st across to last 2 sts, sc2tog	(19 sc)
☐ **Rows 33 to 34** 33 34	Ch 1, turn; sc2tog, sc in each st across to last 2 sts, sc2tog	(15 sc)
☐ **Rows 35 to 50** 35 36 37 38 39 40 41 42 43 44 45 46 47 48 49 50	Ch 1, turn; sc in each st across	(15 sc)
☐ **Rows 51 to 83** 51 52 53 54 55 56 57 58 59 60 61 62 63 64 65 66 67 68 69 70 71 72 73 74 75 76 77 78 79 80 81 82 83	Ch 1, turn; 2 sc in first st, sc in each st across to last st, 2 sc in last st	(81 sc)
☐ **Row 84**	Ch 1, turn; sc in each st across	(81 sc)
☐ **Rows 85 to 88** 85 86 87 88	Repeat Rows 83 and 84, 2 more times (83, 85 sc at the ends of the repeats)	(85 sc)

For your own crochet, gifts and handmade pieces you sell. Do not resell or share this PDF or copies of it.

☐ **Rows 89 to 97** 89 90 91 92 93 94 95 96 97	Ch 1, turn; sc in each st across	(85 sc)
☐ **End**	Fasten off. The front has room: in rows 5, 9, 13 and 17, at each side of its middle, 2 sc are worked into one st, and in rows 26, 28, 30 and 32 two sts are worked together at each side of the middle. These are the darts; they make the middle of the front a soft hollow. Rows 1 to 10 are the sides of the front, rows 35 to 50 the crotch, rows 88 to 97 the sides of the back. Line the brief now (see NOTES), while it is flat: the large lining as it is cut is about 20¾ in (52.5 cm) wide and 19½ in (49.5 cm) long, measured at its widest and at its longest; the lining of the front is as wide and is cut about 10½ in (26.5 cm) long. Then the side seams: fold the brief at the crotch with the right side outward, so that row 97 lies behind the foundation chain. At each side, with a new length of yarn A of about 8 in (20 cm), sew the ends of rows 1 to 10 to the ends of rows 97 to 88 with mattress stitch, row 1 to row 97, row 2 to row 96 and so on (10 row ends to 10). Rows 11 to 87 stay open for the legs.	

Edging of the right leg, as worn

Yarn B, turquoise.

☐ **Foundation**	Hold the brief with the right side facing and the right leg opening, as worn, uppermost. Join yarn B in the end of row 11, the first row of the front past the side seam; ch 1 and go around the opening: along rows 11 to 21, 2 sc in the end of each of the next 11 rows (22 sc); along rows 22 to 34, [sc in the end of each of the next 2 rows, 2 sc in the end of the next row] 4 times, sc in the end of the next row (17 sc); along rows 35 to 50, sc in the end of each of the next 3 rows, [skip the end of the next row, sc in the end of each of the next 4 rows] twice, skip the end of the next row, sc in the end of each of the next 2 rows (13 sc); along rows 51 to 87, [sc in the end of each of the next 3 rows, 2 sc in the end of the next row] 9 times, sc in the end of the next row (46 sc). There are 98 sc in all; join with sl st in first sc. This is rnd 1.	
☐ **Rnd 2**	Ch 1; sc in each st around; join with sl st in first sc	(98 sc)
☐ **Rnd 3**	Ch 1; sc in back loop only of each st around; join with sl st in first sc	(98 sc)
☐ **Rnd 4**	Ch 1; sc in each st around; join with sl st in first sc	(98 sc)
☐ **End**	Fasten off, leaving an end of about 58 in (145 cm) for sewing.	

Edging of the left leg, as worn

Yarn B, turquoise.

☐ **Foundation**	Hold the brief with the right side facing and the left leg opening, as worn, uppermost. Join yarn B in the end of row 87, the first row of the back past the side seam; ch 1 and go around the opening: along rows 51 to 87, met from the last of them, sc in the end of the next row, [2 sc in the end of the next row, sc in the end of each of the next 3 rows] 9 times (46 sc); along rows 35 to 50, met from the last of them, sc in the end of each of the next 2 rows, [skip the end of the next row, sc in the end of each of the next 4 rows] twice, skip the end of the next row, sc in the end of each of the next 3 rows (13 sc); along rows 22 to 34, met from the last of them, sc in the end of the next row, [2 sc in the end of the next row, sc in the end of each of the next 2 rows] 4 times (17 sc); along rows 11 to 21, met from the last of them, 2 sc in the end of each of the next 11 rows (22 sc). There are 98 sc in all; join with sl st in first sc. This is rnd 1.	
☐ **Rnd 2**	Ch 1; sc in each st around; join with sl st in first sc	(98 sc)
☐ **Rnd 3**	Ch 1; sc in back loop only of each st around; join with sl st in first sc	(98 sc)
☐ **Rnd 4**	Ch 1; sc in each st around; join with sl st in first sc	(98 sc)
☐ **End**	Fasten off, leaving an end of about 58 in (145 cm) for sewing.	

For your own crochet, gifts and handmade pieces you sell. Do not resell or share this PDF or copies of it.

Waist casing

Yarn B, turquoise.

☐ **Foundation**	Hold the brief with the right side facing and the waist edge uppermost. Join yarn B at the left side seam, as worn, in the first ch of the foundation chain, at the front; ch 1, sc in each of the 85 chs of the foundation chain along their free side, then sc in each of the 85 sts of row 97 (170 sc); join with sl st in first sc. This is rnd 1.	
☐ **Rnd 2**	Ch 1; sc in next 38 sts, ch 1, skip next st, sc in next 7 sts, ch 1, skip next st, sc in each st around; join with sl st in first sc	(168 sc, 2 ch-1 sps)
☐ **Rnd 3**	Ch 1; sc in next 38 sts, sc in next ch-1 sp, sc in next 7 sts, sc in next ch-1 sp, sc in each st around; join with sl st in first sc	(170 sc)
☐ **Rnd 4**	Ch 1; sc in each st around; join with sl st in first sc	(170 sc)
☐ **Rnd 5**	Ch 1; sc in back loop only of each st around; join with sl st in first sc	(170 sc)
☐ **Rnds 6 to 8** 6 7 8	Ch 1; sc in each st around; join with sl st in first sc	(170 sc)
☐ **End**	Fasten off, leaving an end of about 98 in (250 cm) for sewing. The two ch-1 spaces of rnd 2 are the eyelets for the drawstring, at the middle of the front.	

Drawstring

Yarn A, black.

☐ **Foundation**	With yarn A, ch 311.	
☐ **Row 1**	Sl st in 2nd ch from hook and in each ch across	(310 sl sts)
☐ **End**	The drawstring is about 60 in (152.5 cm) long (the slip stitches draw the chain in). Fasten off.	

Assembly

1. Waist: turn rnds 5 to 8 of the casing to the inside along the ridge of rnd 5, and sew the top of rnd 8 to the back of rnd 1, 170 sts to 170 sts, with the end of the casing. The casing has no elastic in it; the drawstring holds the waist.

2. Legs: at each leg opening turn rnds 3 and 4 of the edging to the inside along the ridge of rnd 3, and sew the top of rnd 4 to the back of rnd 1, 98 sts to 98 sts, with the end of the edging; leave about 2 in (5 cm) open at the side seam. For each leg cut a piece of swimwear elastic ¼ in (6 mm) wide and 21 in (53.5 cm) long, draw it through with a safety pin, lap its two ends 1 in (2.5 cm) and pin them: each elastic is then 20 in (51 cm) around. Try the brief on and take the elastic in or let it out as you like; then sew the lapped ends together firmly with sewing thread and sew the rest of the casing shut.

3. Drawstring: with a safety pin put one end of the drawstring in through one of the two eyelets, from the outside, lead it all the way around inside the casing and bring it out through the other eyelet. Pull the two ends even and knot each end. Draw the waist in to the width you want and tie a bow: on the outside, or put the bow inside after it is tied.

Finishing

- Weave in all the ends. Wash as the yarn label says and lay flat to the measurements to dry.

In all: 2 pieces; 8,147 stitches (6,061 in the brief, 294 in the edging of the right leg, as worn, 294 in the edging of the left leg, as worn, 1,188 in the waist casing, 310 in the drawstring).

Found a mistake in this pattern? Tell us at flossfield.com, under Make a request.

For your own crochet, gifts and handmade pieces you sell. Do not resell or share this PDF or copies of it.