Men's button cardigan

M, to fit chest 39 in (99 cm) · US terms



Finished size
About 44¾ in (113.5 cm) at the chest and about 26¼ in (66.5 cm) long
To fit a chest of 39 in (99 cm)

Skill
Easy
Basic stitches, simple shaping and seams

Yarn
Medium (4)

Hook
5.5 mm (US I-9)

Gauge
13 stitches and 11 rows to 4 in (10 cm)
In half double crochet (UK half treble).

What you need

Yarn: any one color (forest in the picture), medium (4) **about 1,650 yd (1,509 m), an estimate**

By weight: about 830 g, an estimate, where 100 g is 200 yd (183 m).

Hook: 5.5 mm (US I-9), or the size that gives you the gauge. Also: yarn needle, scissors, tape measure, stitch markers, 5 buttons, ¾ in (20 mm) across and sewing thread and a sewing needle.

To find how many balls: divide by the length on your yarn's label and round up. Buy them from one dye lot. The estimate is from the stitches of this size at this gauge.

Sizes

Size	To fit chest	Yarn, an estimate	Chest (buttoned)	Length	Armhole depth	Sleeve	Upper sleeve	Back neck
S	35 in (89 cm)	about 1,500 yd (1,372 m)	39¾ in (101 cm)	26¼ in (66.5 cm)	9½ in (24 cm)	18¼ in (46.5 cm)	19 in (48.5 cm)	7½ in (19 cm)
M (this file)	**39 in (99 cm)**	**about 1,650 yd (1,509 m)**	**44¾ in (113.5 cm)**	**26¼ in (66.5 cm)**	**10¼ in (26 cm)**	**18¼ in (46.5 cm)**	**20¼ in (51.5 cm)**	**7½ in (19 cm)**
L	43 in (109 cm)	about 1,800 yd (1,646 m)	47¾ in (121.5 cm)	27 in (68.5 cm)	10¼ in (26 cm)	19 in (48.5 cm)	20¼ in (51.5 cm)	7½ in (19 cm)
XL	47 in (119.5 cm)	about 1,925 yd (1,760 m)	52 in (132 cm)	27 in (68.5 cm)	11 in (28 cm)	19 in (48.5 cm)	21½ in (54.5 cm)	8 in (20.5 cm)
2X	51 in (129.5 cm)	about 2,075 yd (1,897 m)	57 in (145 cm)	27 in (68.5 cm)	11¾ in (30 cm)	19 in (48.5 cm)	23½ in (59.5 cm)	8 in (20.5 cm)

For your own crochet, gifts and handmade pieces you sell. Do not resell or share this PDF or copies of it.

3X	55 in (139.5 cm)	about 2,200 yd (2,012 m)	60 in (152.5 cm)	27¾ in (70.5 cm)	11¾ in (30 cm)	19 in (48.5 cm)	23½ in (59.5 cm)	8 in (20.5 cm)

Schematic

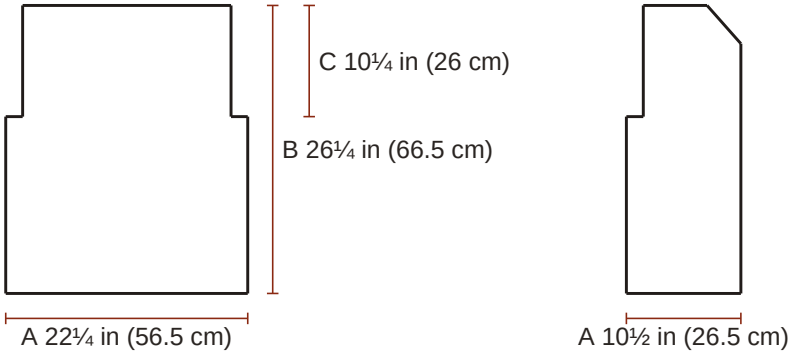

Back
A half the chest
B the length
C the armhole

Front (make 2)
A each front

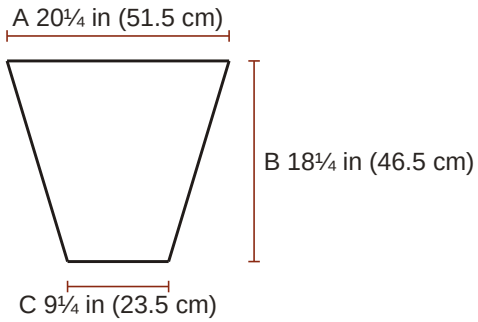

Sleeve (make 2)
A the top of the sleeve, opened flat
B the sleeve
C around the cuff

Gauge

13 stitches and 11 rows to 4 in (10 cm) in half double crochet.

> **The swatch.** A test piece to measure and pull out. It is not the start of the pattern. Ch 21; begin in the 2nd ch from the hook and work 16 rows of half double crochet on 20 sts, about 6¼ in (16 cm) wide and 5¾ in (14.5 cm) high, and measure 4 in (10 cm) in the middle. Use a larger hook if your swatch is small, a smaller one if it is large. Ribs: worked sideways, 14 rows and 13 sts to 4 in (10 cm), so a rib of 8 sts is about 2½ in (6.5 cm) deep.

Notes

- The finished chest is from 4¾ in (12 cm) to 6 in (15 cm) wider than the body measurement, by the size. Choose by the finished measurement you like; no fit is promised beyond the measurements given.
- The turning chain (ch 1 for single and half double crochet) never counts as a stitch. Work the first stitch of every row into the first stitch, at the base of the turning chain.

For your own crochet, gifts and handmade pieces you sell. Do not resell or share this PDF or copies of it.

- Odd-numbered rows are right side rows (for the fronts, go by the words at their head). Mark the right side of each piece with a stitch marker or a scrap of yarn.
- To work into a chain space, insert the hook under the whole chain.
- A decrease counts as one stitch.
- The ribs are worked sideways in back-loop single crochet (UK: double crochet). The body and sleeves are worked up from a long edge, one stitch in the end of each rib row. The rib draws in: it is a little narrower than the body above it.
- Stitches worked evenly along row ends: about 7 sc in every 6 rows.
- Sew every seam with the yarn needle and the same yarn.
- In back loop only: insert the hook under the loop of the stitch that is farther from you, and leave the nearer loop free.

Instructions

M, to fit chest 39 in (99 cm). US terms.

ch chain, **sc** single crochet (UK double crochet), **hdc** half double crochet (UK half treble), **st** stitch, **sp** space.
RS right side, the one that shows.
ch-2 sp: the gap under two chains; the hook goes in the gap.
[ ] 4 times: work what is inside 4 times in all.
(8 sc): the stitches you have when the row is done. **How to read a pattern**.

Special stitches

hdc2tog (half double crochet 2 stitches together (UK half treble 2 together)): [yarn over, insert the hook in the next stitch and pull up a loop] twice (5 loops on the hook); yarn over and pull through all 5 loops.

Hem rib

☐ **Foundation**	Ch 9.	
☐ **Row 1 (RS)**	Sc in 2nd ch from hook and in each ch across	(8 sc)
☐ **Rows 2 to 72**	Ch 1, turn; sc in back loop only of each st across	(8 sc)

2 3 4 5 6 7 8 9 10 11 12 13 14 15 16 17 18 19 20 21 22 23 24 25 26 27 28 29
30 31 32 33 34 35 36 37 38 39 40 41 42 43 44 45 46 47 48 49 50 51 52 53 54 55 56 57
58 59 60 61 62 63 64 65 66 67 68 69 70 71 72

☐ **End**	Fasten off.	

Back

☐ **Foundation**	Hold the hem rib with one long edge at the top. Join the yarn at the right-hand end of that edge; ch 1, sc in the end of each rib row across (72 sc). This is row 1, and a right side row.	
☐ **Rows 2 to 38**	Ch 1, turn; hdc in each st across	(72 hdc)

2 3 4 5 6 7 8 9 10 11 12 13 14 15 16 17 18 19 20 21 22 23 24 25 26 27 28 29
30 31 32 33 34 35 36 37 38

☐ **Row 39**	Fasten off and turn. Skip the first 5 sts and join the yarn in the next st; ch 1, and beginning in that st, hdc in next 62 sts, leave the last 5 sts unworked	(62 hdc)

For your own crochet, gifts and handmade pieces you sell. Do not resell or share this PDF or copies of it.

☐ **Rows 40 to 66**	Ch 1, turn; hdc in each st across	(62 hdc)

40 41 42 43 44 45 46 47 48 49 50 51 52 53 54 55 56 57 58 59 60 61 62 63 64 65 66

☐ **End**	The back measures about 22¼ in (56.5 cm) wide and 26¼ in (66.5 cm) long, and 19 in (48.5 cm) across above the armholes. Fasten off.	

Front hem rib: make 2, one for each front

☐ **Foundation**	Ch 9.	
☐ **Row 1 (RS)**	Sc in 2nd ch from hook and in each ch across	(8 sc)
☐ **Rows 2 to 34**	Ch 1, turn; sc in back loop only of each st across	(8 sc)

2 3 4 5 6 7 8 9 10 11 12 13 14 15 16 17 18 19 20 21 22 23 24 25 26 27 28 29 30 31 32 33 34

☐ **End**	Fasten off.	

Front: make 2, alike

☐ **Foundation**	Both fronts are worked from these rows. With the odd-numbered rows on the outside the piece is the left front as worn; turn the second piece over, so that its odd-numbered rows lie on the inside, and it is the right front. When a front is done, mark its outside: in the bands and the finishing 'right side' means the outside. Hold a front hem rib with one long edge at the top. Join the yarn at the right-hand end of that edge; ch 1, sc in the end of each rib row across (34 sc). This is row 1.	
☐ **Rows 2 to 38**	Ch 1, turn; hdc in each st across	(34 hdc)

2 3 4 5 6 7 8 9 10 11 12 13 14 15 16 17 18 19 20 21 22 23 24 25 26 27 28 29 30 31 32 33 34 35 36 37 38

☐ **Row 39**	Fasten off and turn. Skip the first 5 sts and join the yarn in the next st; ch 1, and beginning in that st, hdc in next 29 sts	(29 hdc)
☐ **Rows 40 to 56**	Ch 1, turn; hdc in each st across	(29 hdc)

40 41 42 43 44 45 46 47 48 49 50 51 52 53 54 55 56

☐ **Row 57**	Ch 1, turn; hdc in next 24 sts, leave the last 5 sts unworked. The neck edge is at the end of this row	(24 hdc)
☐ **Row 58**	Ch 1, turn; hdc2tog, hdc in each st across	(23 hdc)
☐ **Row 59**	Ch 1, turn; hdc in each st across to last 2 sts, hdc2tog	(22 hdc)
☐ **Rows 60 to 61**	Repeat Rows 58 and 59, once more	(20 hdc)

60 61

☐ **Row 62**	Ch 1, turn; hdc2tog, hdc in each st across	(19 hdc)
☐ **Rows 63 to 66**	Ch 1, turn; hdc in each st across	(19 hdc)

63 64 65 66

☐ **End**	The front measures about 10½ in (26.5 cm) wide above the hem rib; the button bands, one over the other, add about 1 5/8 in (4.1 cm) to the chest later (the size list counts it). The 19 sts left at the top are the shoulder. Fasten off.	

For your own crochet, gifts and handmade pieces you sell. Do not resell or share this PDF or copies of it.

Cuff rib: make 2

☐ **Foundation**	Ch 9.	
☐ **Row 1 (RS)**	Sc in 2nd ch from hook and in each ch across	(8 sc)
☐ **Rows 2 to 30**	Ch 1, turn; sc in back loop only of each st across	(8 sc)

2 3 4 5 6 7 8 9 10 11 12 13 14 15 16 17 18 19 20 21 22 23 24 25 26 27 28 29 30

☐ **End**	Fasten off.	

Sleeve: make 2

☐ **Foundation**	Hold a cuff rib with one long edge at the top. Join the yarn at the right-hand end of that edge; ch 1, sc in the end of each rib row across (30 sc). This is row 1, and a right side row.	
☐ **Row 2**	Ch 1, turn; hdc in each st across	(30 hdc)
☐ **Row 3**	Ch 1, turn; 2 hdc in first st, hdc in each st across to last st, 2 hdc in last st	(32 hdc)
☐ **Rows 4 to 37**	Repeat Rows 2 and 3, 17 more times (34, 36, 38, 40, 42, 44, 46, 48, 50, 52, 54, 56, 58, 60, 62, 64, 66 hdc at the ends of the repeats)	(66 hdc)

4 5 6 7 8 9 10 11 12 13 14 15 16 17 18 19 20 21 22 23 24 25 26 27 28 29 30 31 32 33 34 35 36 37

☐ **Rows 38 to 44**	Ch 1, turn; hdc in each st across	(66 hdc)

38 39 40 41 42 43 44

☐ **End**	The sleeve measures about 20¼ in (51.5 cm) across the top and 18¼ in (46.5 cm) long. Fasten off.	

Button band

☐ **Foundation**	Work this at step 4 of Assembly. With the right side facing, join the yarn at the lower corner of the right front edge (as worn); ch 1, sc in each of the 8 sts along the end of the front hem rib, and 66 sc evenly along the 56 row ends of the straight front edge, up to the neck (74 sc). This is row 1.	
☐ **Rows 2 to 6**	Ch 1, turn; sc in each st across	(74 sc)

2 3 4 5 6

☐ **End**	Fasten off.	

Buttonhole band

☐ **Foundation**	Work this at step 4 of Assembly. With the right side facing, join the yarn at the neck end of the left front edge (as worn); ch 1, 66 sc evenly along the 56 row ends of the straight front edge, from the neck down, and sc in each of the 8 sts along the end of the front hem rib (74 sc). This is row 1.	
☐ **Rows 2 to 3**	Ch 1, turn; sc in each st across	(74 sc)

2 3

For your own crochet, gifts and handmade pieces you sell. Do not resell or share this PDF or copies of it.

☐ **Row 4**	Ch 1, turn; sc in next 2 sts, **[**ch 2, skip next 2 sts, sc in next 15 sts**] 4 times**, ch 2, skip next 2 sts, sc in next 2 sts	(64 sc, 5 ch-2 sps)
☐ **Row 5**	Ch 1, turn; sc in next 2 sts, **[**2 sc in next ch-2 sp, sc in next 15 sts**] 4 times**, 2 sc in next ch-2 sp, sc in next 2 sts	(74 sc)
☐ **Row 6**	Ch 1, turn; sc in each st across	(74 sc)
☐ **End**	Fasten off.	

Neck edging

☐ **Foundation**	Work this at step 4 of Assembly. With the right side facing, join the yarn at the neck corner of the right front band; ch 1, sc in the end of each of the 6 band rows, sc in each of the 5 sts left at the front neck, 12 sc evenly along the 10 row ends up to the shoulder, sc in each of the 24 sts of the back neck, 12 sc evenly along the 10 row ends down the left front, sc in each of the 5 sts left at the front neck and sc in the end of each of the 6 band rows (70 sc). This is row 1.	
☐ **Rows 2 to 3** 2 3	Ch 1, turn; sc in each st across	(70 sc)
☐ **End**	Fasten off.	

Assembly

1. Shoulders: lay the fronts on the back with right sides together and the side edges level. Sew the 19 shoulder sts of each front to the 19 sts at each end of the back, and leave the middle 24 sts of the back open for the neck.

2. Sleeves: with right sides together, put the middle of the top edge of a sleeve at each shoulder seam. Sew the top edge to the straight edges of the armhole, front and back, and sew the top 1½ in (4 cm) of each side edge of the sleeve to the 5 sts left at the underarm.

3. Sides and sleeves: sew each side seam from the underarm down to the hem, and each sleeve seam from the underarm to the cuff edge.

4. Bands: work the button band, the buttonhole band and then the neck edging, as written above. Sew the buttons to the button band opposite the buttonholes, with the sewing thread. The buttonholes are on the left front, as on men's clothes: the left front laps over the right.

Finishing

- Weave in all the ends. Wash as the yarn label says and lay flat to the measurements to dry.

In all: 5 pieces; 16,374 stitches.

Found a mistake in this pattern? Tell us at flossfield.com, under Make a request.

For your own crochet, gifts and handmade pieces you sell. Do not resell or share this PDF or copies of it.