Men's crew neck sweater

Size M · US terms



Finished size
About 44¼ in (112.5 cm) at the chest and about 25¾ in (65.5 cm) long
To fit a chest of 39 in (99 cm)

Skill
Easy
Flat pieces in half double crochet with simple shaping at the neck and along the sleeves, then straight seams.

Yarn
Medium (4), 3 colors

Hook
5.5 mm (US I-9)

Gauge
13 stitches and 11 rows to 4 in (10 cm)
In half double crochet.

You will need

Yarn A: navy, the sweater	**about 1,275 yd (1,166 m), an estimate**
Yarn B: gray, the wide stripes of the band	**about 275 yd (251 m), an estimate**
Yarn C: cream, the stripe in the middle of the band	**about 65 yd (59 m), an estimate**

Hook: 5.5 mm (US I-9). Also: yarn needle, scissors, tape measure and stitch markers.

To find how many balls: divide by the length on your yarn's label and round up. The estimate is from the stitches of this size at this gauge.

Sizes

Size	To fit chest	Chest	Length	Armhole depth	Sleeve	Upper sleeve	Back neck	Yarn, an estimate
Size S	35 in (89 cm)	39½ in (100.5 cm)	25¾ in (65.5 cm)	9½ in (24 cm)	17¾ in (45 cm)	19 in (48.5 cm)	9¼ in (23.5 cm)	about 1,505 yd (1,375 m)
Size M (this file)	**39 in (99 cm)**	**44¼ in (112.5 cm)**	**25¾ in (65.5 cm)**	**9¾ in (25 cm)**	**17¾ in (45 cm)**	**19¾ in (50 cm)**	**9¼ in (23.5 cm)**	**about 1,615 yd (1,476 m)**
Size L	43 in (109 cm)	48 in (122 cm)	25¾ in (65.5 cm)	10½ in (26.5 cm)	18¼ in (46.5 cm)	21 in (53.5 cm)	9¼ in (23.5 cm)	about 1,755 yd (1,604 m)
XL	47 in (119.5 cm)	51¾ in (131.5 cm)	26¼ in (66.5 cm)	11 in (28 cm)	18¼ in (46.5 cm)	22¼ in (56.5 cm)	9¼ in (23.5 cm)	about 1,910 yd (1,747 m)

For your own crochet, gifts and handmade pieces you sell. Do not resell or share this PDF.

2X	51 in (129.5 cm)	56½ in (143.5 cm)	26¼ in (66.5 cm)	11½ in (29 cm)	17¾ in (45 cm)	22¾ in (58 cm)	9¼ in (23.5 cm)	about 2,080 yd (1,902 m)
3X	55 in (139.5 cm)	60¼ in (153 cm)	26¼ in (66.5 cm)	12 in (30.5 cm)	17¾ in (45 cm)	24 in (61 cm)	9¼ in (23.5 cm)	about 2,185 yd (1,998 m)

Schematic

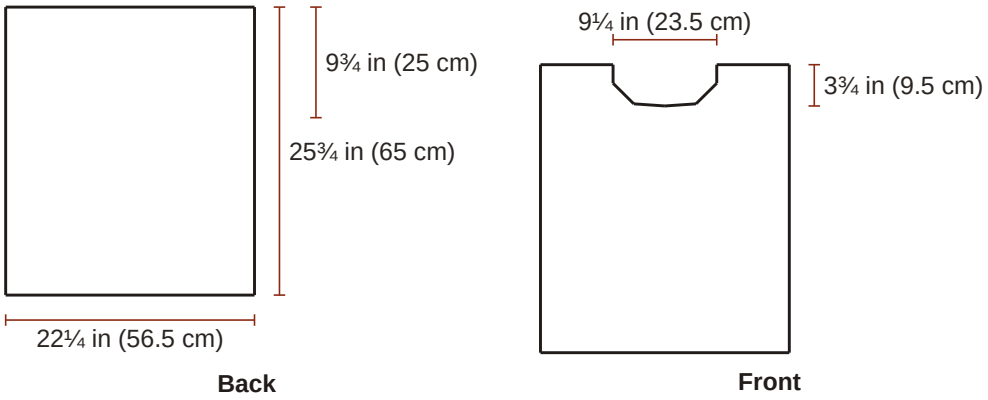

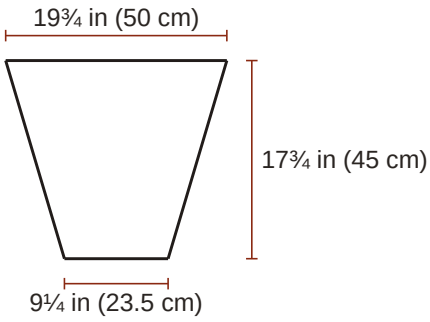

Abbreviations

Written in US terms. Where the UK name differs it is given beside the US one.

ch	chain
sl st	slip stitch (UK ss, slip stitch)
sc	single crochet (UK dc, double crochet)
hdc	half double crochet (UK htr, half treble)
st	stitch
rnd	round
RS	right side

Special stitches

hdc2tog (half double crochet 2 stitches together (UK half treble 2 together)): [Yarn over, insert the hook in the next stitch and pull up a loop] twice (5 loops on the hook); yarn over and pull through all 5 loops. It leaves 1 hdc2tog for the next row.

For your own crochet, gifts and handmade pieces you sell. Do not resell or share this PDF.

Gauge

13 stitches and 11 rows to 4 in (10 cm) in half double crochet.

Ribs: worked sideways, 14 rows and 13 sts to 4 in (10 cm), so a rib of 8 sts is about 2½ in (6.5 cm) deep.

> **The swatch.** A test piece to measure and pull out. It is not the start of the pattern. Ch 21; work 16 rows of half double crochet on 20 sts, about 6¼ in (16 cm) wide and 5¾ in (14.5 cm) high, and measure 4 in (10 cm) in the middle. Use a larger hook if your swatch is small, a smaller one if it is large. Ribs: worked sideways, 14 rows and 13 sts to 4 in (10 cm), so a rib of 8 sts is about 2½ in (6.5 cm) deep.

Before you start

- Men's sizes, S to 3X.
- The finished chest is from 4½ in (11.5 cm) to 5½ in (14 cm) wider than the body measurement, by the size. Choose by the finished measurement you like; no fit is promised beyond the measurements given.
- In back loop only: insert the hook under the loop of the stitch that is farther from you, and leave the nearer loop free.
- The turning chain (ch 1 for single and half double crochet) never counts as a stitch. Work the first stitch of every row into the first stitch, at the base of the turning chain.
- The chain at the start of a round never counts as a stitch. Work the first stitch of the round into the stitch at its base, where the round was joined.
- Odd-numbered rows are right side rows. Mark the right side of each piece with a stitch marker or a scrap of yarn.
- A decrease counts as one stitch.
- The ribs are worked sideways in back-loop single crochet (UK: double crochet). The body and sleeves are worked up from a long edge, one stitch in the end of each rib row.
- Stitches worked evenly along row ends: about 7 sc in every 6 rows.
- Sew every seam with the yarn needle and yarn A.
- Color changes in rows: work the last yarn over of the last stitch of the row before with the new yarn. Cut the old yarn, leaving an end of about 6 in (15 cm), or, if it is needed again at the same edge within 6 rows, carry it loosely up that edge.

Instructions

Chosen: Size M. The count in round brackets at the end of a line is what that line leaves. Tick the box when a row is done. In UK terms sl st is slip stitch, sc is double crochet and hdc is half treble.

Hem rib: make 2, one for the back and one for the front

Yarn A, navy.

☐ **Foundation**	With yarn A, ch 9.	
☐ **Row 1 (RS)**	Sc in 2nd ch from hook and in each ch across	**(8 sc)**
☐ **Rows 2 to 72**	Ch 1, turn; sc in back loop only of each st across	**(8 sc)**

A box for each row, 2 to 72: tick them off as you go.

2	3	4	5	6	7	8	9	10	11	12	13	14	15	16	17	18	19	20	21	22	23	24	25	26	27	28	29	30
31	32	33	34	35	36	37	38	39	40	41	42	43	44	45	46	47	48	49	50	51	52	53	54	55	56	57	58	59

For your own crochet, gifts and handmade pieces you sell. Do not resell or share this PDF.

60 61 62 63 64 65 66 67 68 69 70 71 72

☐ **End** Fasten off.

Back

Yarns in order of use: A, navy; B, gray; C, cream.

Colors: rows 1 to 33 yarn A; rows 34 to 39 yarn B; rows 40 to 42 yarn C; rows 43 to 47 yarn B; rows 48 to 64 yarn A.

☐ **Foundation** Hold a hem rib with one long edge at the top. Join yarn A at the right-hand end of that edge.

☐ **Row 1 (RS)** Ch 1, sc in the end of each rib row across **(72 sc)**

☐ **Rows 2 to 33** Ch 1, turn; hdc in each st across **(72 hdc)**

A box for each row, 2 to 33: tick them off as you go.

2 3 4 5 6 7 8 9 10 11 12 13 14 15 16 17 18 19 20 21 22 23 24 25 26 27 28 29 30 31 32 33

☐ **Rows 34 to 39** **Yarn B.** Ch 1, turn; hdc in each st across **(72 hdc)**

A box for each row, 34 to 39: tick them off as you go.

34 35 36 37 38 39

☐ **Rows 40 to 42** **Yarn C.** Ch 1, turn; hdc in each st across **(72 hdc)**

A box for each row, 40 to 42: tick them off as you go.

40 41 42

☐ **Rows 43 to 47** **Yarn B.** Ch 1, turn; hdc in each st across **(72 hdc)**

A box for each row, 43 to 47: tick them off as you go.

43 44 45 46 47

☐ **Rows 48 to 64** **Yarn A.** Ch 1, turn; hdc in each st across **(72 hdc)**

A box for each row, 48 to 64: tick them off as you go.

48 49 50 51 52 53 54 55 56 57 58 59 60 61 62 63 64

☐ **End** The back measures about 22¼ in (56.5 cm) wide and 25¾ in (65.5 cm) long. Fasten off.

Front

Yarns in order of use: A, navy; B, gray; C, cream.

Colors: rows 1 to 33 yarn A; rows 34 to 39 yarn B; rows 40 to 42 yarn C; rows 43 to 47 yarn B; rows 48 to 54 yarn A.

☐ **Foundation** Hold a hem rib with one long edge at the top. Join yarn A at the right-hand end of that edge.

☐ **Row 1 (RS)** Ch 1, sc in the end of each rib row across **(72 sc)**

☐ **Rows 2 to 33** Ch 1, turn; hdc in each st across **(72 hdc)**

A box for each row, 2 to 33: tick them off as you go.

2 3 4 5 6 7 8 9 10 11 12 13 14 15 16 17 18 19 20 21 22 23 24 25 26 27 28 29 30 31 32 33

☐ **Rows 34 to 39** **Yarn B.** Ch 1, turn; hdc in each st across **(72 hdc)**

A box for each row, 34 to 39: tick them off as you go.

34 35 36 37 38 39

For your own crochet, gifts and handmade pieces you sell. Do not resell or share this PDF.

☐ **Rows 40 to 42**	**Yarn C.** Ch 1, turn; hdc in each st across	**(72 hdc)**

A box for each row, 40 to 42: tick them off as you go.

40 41 42

☐ **Rows 43 to 47**	**Yarn B.** Ch 1, turn; hdc in each st across	**(72 hdc)**

A box for each row, 43 to 47: tick them off as you go.

43 44 45 46 47

☐ **Rows 48 to 54**	**Yarn A.** Ch 1, turn; hdc in each st across	**(72 hdc)**

A box for each row, 48 to 54: tick them off as you go.

48 49 50 51 52 53 54

☐ **End**	Do not fasten off.

Front, first side of the neck

Yarn A, navy.

Colors: yarn A throughout.

☐ **Foundation**	Go on from row 54 of the front. This is the left side as worn. The neck edge is at the end of the next row.	
☐ **Row 55**	Ch 1, turn; hdc in next 28 sts, leave the last 44 sts unworked	**(28 hdc)**
☐ **Row 56**	Ch 1, turn; hdc2tog, hdc in each st across	**(27 hdc)**
☐ **Row 57**	Ch 1, turn; hdc in each st across to last 2 sts, hdc2tog	**(26 hdc)**
☐ **Row 58**	Ch 1, turn; hdc2tog, hdc in each st across	**(25 hdc)**
☐ **Row 59**	Ch 1, turn; hdc in each st across to last 2 sts, hdc2tog	**(24 hdc)**
☐ **Row 60**	Ch 1, turn; hdc2tog, hdc in each st across	**(23 hdc)**
☐ **Row 61**	Ch 1, turn; hdc in each st across to last 2 sts, hdc2tog	**(22 hdc)**
☐ **Row 62**	Ch 1, turn; hdc2tog, hdc in each st across	**(21 hdc)**
☐ **Rows 63 to 64**	Ch 1, turn; hdc in each st across	**(21 hdc)**

A box for each row, 63 to 64: tick them off as you go.

63 64

☐ **End**	The 21 sts left are the shoulder. Fasten off.

Front, second side of the neck

Yarn A, navy.

Colors: yarn A throughout.

☐ **Foundation**	Go back to row 54 of the front, with the same side facing you as for row 55 of the first side. Skip the next 16 unworked sts of row 54 for the neck and join yarn A in the next st. This is the right side as worn. The first st of row 55 goes in the joining st. The neck edge is at the beginning of that row.	
☐ **Row 55**	Ch 1; hdc in each st across	**(28 hdc)**
☐ **Row 56**	Ch 1, turn; hdc in each st across to last 2 sts, hdc2tog	**(27 hdc)**

For your own crochet, gifts and handmade pieces you sell. Do not resell or share this PDF.

☐ **Row 57**	Ch 1, turn; hdc2tog, hdc in each st across	**(26 hdc)**
☐ **Row 58**	Ch 1, turn; hdc in each st across to last 2 sts, hdc2tog	**(25 hdc)**
☐ **Row 59**	Ch 1, turn; hdc2tog, hdc in each st across	**(24 hdc)**
☐ **Row 60**	Ch 1, turn; hdc in each st across to last 2 sts, hdc2tog	**(23 hdc)**
☐ **Row 61**	Ch 1, turn; hdc2tog, hdc in each st across	**(22 hdc)**
☐ **Row 62**	Ch 1, turn; hdc in each st across to last 2 sts, hdc2tog	**(21 hdc)**
☐ **Rows 63 to 64**	Ch 1, turn; hdc in each st across	**(21 hdc)**

A box for each row, 63 to 64: tick them off as you go.

63 64

☐ **End**	The 21 sts left are the shoulder. Fasten off.	

Cuff rib: make 2

Yarn A, navy.

☐ **Foundation**	With yarn A, ch 9.	
☐ **Row 1 (RS)**	Sc in 2nd ch from hook and in each ch across	**(8 sc)**
☐ **Rows 2 to 30**	Ch 1, turn; sc in back loop only of each st across	**(8 sc)**

A box for each row, 2 to 30: tick them off as you go.

2 3 4 5 6 7 8 9 10 11 12 13 14 15 16 17 18 19 20 21 22 23 24 25 26 27 28 29 30

☐ **End**	Fasten off.	

Sleeve: make 2

Yarns in order of use: A, navy; B, gray; C, cream.

Colors: rows 1 to 22 yarn A; rows 23 to 26 yarn B; row 27 yarn C; rows 28 to 31 yarn B; rows 32 to 42 yarn A.

☐ **Foundation**	Hold a cuff rib with one long edge at the top. Join yarn A at the right-hand end of that edge.	
☐ **Row 1 (RS)**	Ch 1, sc in the end of each rib row across	**(30 sc)**
☐ **Row 2**	Ch 1, turn; hdc in each st across	**(30 hdc)**
☐ **Row 3**	Ch 1, turn; 2 hdc in first st, hdc in each st across to last st, 2 hdc in last st	**(32 hdc)**
☐ **Row 4**	Ch 1, turn; hdc in each st across	**(32 hdc)**
☐ **Row 5**	Ch 1, turn; 2 hdc in first st, hdc in each st across to last st, 2 hdc in last st	**(34 hdc)**
☐ **Row 6**	Ch 1, turn; hdc in each st across	**(34 hdc)**
☐ **Row 7**	Ch 1, turn; 2 hdc in first st, hdc in each st across to last st, 2 hdc in last st	**(36 hdc)**
☐ **Row 8**	Ch 1, turn; hdc in each st across	**(36 hdc)**
☐ **Row 9**	Ch 1, turn; 2 hdc in first st, hdc in each st across to last st, 2 hdc in last st	**(38 hdc)**
☐ **Row 10**	Ch 1, turn; hdc in each st across	**(38 hdc)**
☐ **Row 11**	Ch 1, turn; 2 hdc in first st, hdc in each st across to last st, 2 hdc in last st	**(40 hdc)**

For your own crochet, gifts and handmade pieces you sell. Do not resell or share this PDF.

☐ **Row 12**	Ch 1, turn; hdc in each st across	**(40 hdc)**
☐ **Row 13**	Ch 1, turn; 2 hdc in first st, hdc in each st across to last st, 2 hdc in last st	**(42 hdc)**
☐ **Row 14**	Ch 1, turn; hdc in each st across	**(42 hdc)**
☐ **Row 15**	Ch 1, turn; 2 hdc in first st, hdc in each st across to last st, 2 hdc in last st	**(44 hdc)**
☐ **Row 16**	Ch 1, turn; hdc in each st across	**(44 hdc)**
☐ **Row 17**	Ch 1, turn; 2 hdc in first st, hdc in each st across to last st, 2 hdc in last st	**(46 hdc)**
☐ **Row 18**	Ch 1, turn; hdc in each st across	**(46 hdc)**
☐ **Row 19**	Ch 1, turn; 2 hdc in first st, hdc in each st across to last st, 2 hdc in last st	**(48 hdc)**
☐ **Row 20**	Ch 1, turn; hdc in each st across	**(48 hdc)**
☐ **Row 21**	Ch 1, turn; 2 hdc in first st, hdc in each st across to last st, 2 hdc in last st	**(50 hdc)**
☐ **Row 22**	Ch 1, turn; hdc in each st across	**(50 hdc)**
☐ **Row 23**	**Yarn B.** Ch 1, turn; 2 hdc in first st, hdc in each st across to last st, 2 hdc in last st	**(52 hdc)**
☐ **Row 24**	Ch 1, turn; hdc in each st across	**(52 hdc)**
☐ **Row 25**	Ch 1, turn; 2 hdc in first st, hdc in each st across to last st, 2 hdc in last st	**(54 hdc)**
☐ **Row 26**	Ch 1, turn; hdc in each st across	**(54 hdc)**
☐ **Row 27**	**Yarn C.** Ch 1, turn; 2 hdc in first st, hdc in each st across to last st, 2 hdc in last st	**(56 hdc)**
☐ **Row 28**	**Yarn B.** Ch 1, turn; hdc in each st across	**(56 hdc)**
☐ **Row 29**	Ch 1, turn; 2 hdc in first st, hdc in each st across to last st, 2 hdc in last st	**(58 hdc)**
☐ **Row 30**	Ch 1, turn; hdc in each st across	**(58 hdc)**
☐ **Row 31**	Ch 1, turn; 2 hdc in first st, hdc in each st across to last st, 2 hdc in last st	**(60 hdc)**
☐ **Row 32**	**Yarn A.** Ch 1, turn; hdc in each st across	**(60 hdc)**
☐ **Row 33**	Ch 1, turn; 2 hdc in first st, hdc in each st across to last st, 2 hdc in last st	**(62 hdc)**
☐ **Row 34**	Ch 1, turn; hdc in each st across	**(62 hdc)**
☐ **Row 35**	Ch 1, turn; 2 hdc in first st, hdc in each st across to last st, 2 hdc in last st	**(64 hdc)**
☐ **Rows 36 to 42**	Ch 1, turn; hdc in each st across	**(64 hdc)**

A box for each row, 36 to 42: tick them off as you go.

☐ 36 ☐ 37 ☐ 38 ☐ 39 ☐ 40 ☐ 41 ☐ 42

☐ **End** The sleeve measures about 19¾ in (50 cm) across the top and 17¾ in (45 cm) long. Fasten off.

For your own crochet, gifts and handmade pieces you sell. Do not resell or share this PDF.

Neckband

Yarn A, navy.

Work this at step 2 under Assembly.

☐ **Foundation**	With the right side facing, join yarn A at the right shoulder seam (as worn).	
☐ **Rnd 1**	Ch 1, sc in each of the 30 open sts of the back neck, 12 sc evenly along the 10 row ends down the left side of the neck, sc in each of the 16 sts left at the front, 12 sc evenly along the 10 row ends up the right side; join with sl st in first sc	**(70 sc)**
☐ **Rnds 2 to 5**	Ch 1; sc in each st around; join with sl st in first sc	**(70 sc)**

A box for each round, 2 to 5: tick them off as you go.

2 3 4 5

☐ **End**	Fasten off.

Assembly

1. Shoulders: lay the front on the back with right sides together. Sew the 21 sts at each end of the top edge together, and leave the middle 30 sts of the back open for the neck.

2. Neckband: work it now, as written above.

3. Sleeves: place a marker on each side edge of the body 9¾ in (25 cm) below the shoulder seam (about 27 rows), front and back; this is half the top edge of the sleeve. With right sides together, put the middle of the top edge of a sleeve at each shoulder seam and sew the top edge to the body between the markers.

4. Sides and sleeves: sew each side seam from the marker down to the hem, and each sleeve seam from the underarm to the cuff edge.

Finishing

- Weave in all the ends. Wash as the yarn label says and lay flat to the measurements to dry.

In all: 11 pieces; 15,106 stitches (576 in each hem rib, 4,608 in the back, 3,888 in the front, 238 in the front, first side of the neck, 238 in the front, second side of the neck, 240 in each cuff rib, 2,076 in each sleeve, 350 in the neckband); 52 ends to weave in.

Found a mistake in this pattern? Tell us at flossfield.com, under Make a request.

For your own crochet, gifts and handmade pieces you sell. Do not resell or share this PDF.