Men's fisherman sweater

M, to fit chest 39 in (99 cm) · US terms



Finished size

About 43¾ in (111 cm) at the chest and about 26½ in (67.5 cm) long

To fit a chest of 39 in (99 cm)

Skill

Intermediate

Long post stitches on a ground of single crochet, simple shaping and seams

Yarn

Medium (4)

Hook

5.5 mm (US I-9)

Gauge

13 stitches and 15 rows to 4 in (10 cm)

In single crochet (UK double crochet).

What you need

Yarn: any one color (fisher navy in the picture), medium (4) **about 1,525 yd (1,394 m), an estimate**

By weight: about 760 g, an estimate, where 100 g is 200 yd (183 m).

Hook: 5.5 mm (US I-9), or the size that gives you the gauge. Also: yarn needle, scissors, tape measure and stitch markers.

To find how many balls: divide by the length on your yarn's label and round up. Buy them from one dye lot. The estimate is from the stitches of this size at this gauge.

Sizes

Size	To fit chest	Yarn, an estimate	Chest	Length	Armhole depth	Sleeve	Upper sleeve	Cuff around	Back neck	Neck
S	35 in (89 cm)	about 1,400 yd (1,280 m)	40 in (101.5 cm)	26 in (66 cm)	8½ in (21.5 cm)	18¼ in (46.5 cm)	17¼ in (44 cm)	9¼ in (23.5 cm)	8¼ in (21 cm)	21½ in (54.5 cm)
M (this file)	**39 in (99 cm)**	**about 1,525 yd (1,394 m)**	**43¾ in (111 cm)**	**26½ in (67.5 cm)**	**9¼ in (23.5 cm)**	**18¼ in (46.5 cm)**	**18½ in (47 cm)**	**9¼ in (23.5 cm)**	**8¼ in (21 cm)**	**21½ in (54.5 cm)**
L	43 in (109 cm)	about 1,700 yd (1,554 m)	47½ in (120.5 cm)	27 in (68.5 cm)	9½ in (24 cm)	19¼ in (49 cm)	19 in (48.5 cm)	9¾ in (25 cm)	8¼ in (21 cm)	21½ in (54.5 cm)
XL	47 in (119.5 cm)	about 1,800 yd (1,646 m)	51 in (129.5 cm)	27 in (68.5 cm)	10¼ in (26 cm)	19¼ in (49 cm)	20¼ in (51.5 cm)	9¾ in (25 cm)	8¼ in (21 cm)	21½ in (54.5 cm)
2X	51 in (129.5 cm)	about 1,950 yd (1,783 m)	56 in (142 cm)	27½ in (70 cm)	10¾ in (27.5 cm)	18¾ in (47.5 cm)	21½ in (54.5 cm)	10¼ in (26 cm)	8¼ in (21 cm)	21½ in (54.5 cm)

For your own crochet, gifts and handmade pieces you sell. Do not resell or share this PDF or copies of it.

3X	55 in (139.5 cm)	about 2,100 yd (1,920 m)	59¾ in (152 cm)	28 in (71 cm)	11¼ in (28.5 cm)	18¾ in (47.5 cm)	22¼ in (56.5 cm)	10¼ in (26 cm)	8¼ in (21 cm)	21½ in (54.5 cm)

Schematic

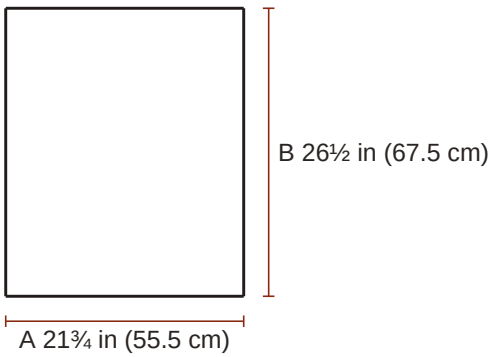

Back
A half the chest
B the length

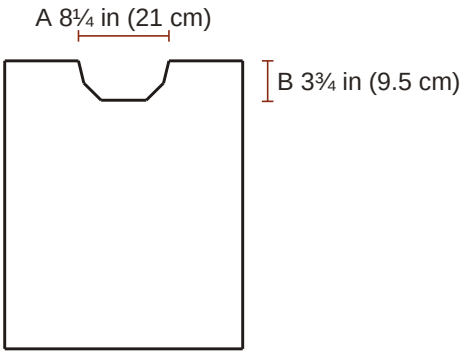

Front
A the neck
B how deep the neck is

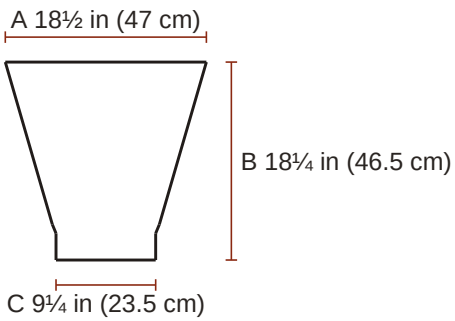

Sleeve (make 2)
A the top of the sleeve, opened flat
B the sleeve
C around the cuff

Gauge

13 stitches and 15 rows to 4 in (10 cm) in single crochet.

> **The swatch.** A test piece to measure and pull out. It is not the start of the pattern. Ch 21; begin in the 2nd ch from the hook and work 22 rows of single crochet on 20 sts, about 6¼ in (16 cm) wide and 5¾ in (14.5 cm) high, and measure 4 in (10 cm) in the middle. Use a larger hook if your swatch is small, a smaller one if it is large. Ribs: worked sideways, 14 rows and 13 sts to 4 in (10 cm), so a rib of 8 sts is about 2½ in (6.5 cm) deep. The rows with lfpd have the same gauge as the plain rows: make each lfpd as tall as 2 rows and no taller. Neckband: the round of sc and the round of dc with the 2 rounds of post stitches are about 1½ in (4 cm) deep.

Notes

- The finished chest is from 4 in (10 cm) to 5 in (12.5 cm) wider than the body measurement, by the size. Choose by the finished measurement you like; no fit is promised beyond the measurements given.

For your own crochet, gifts and handmade pieces you sell. Do not resell or share this PDF or copies of it.

- The turning chain (ch 1 for single crochet, ch 2 for double crochet) never counts as a stitch. Work the first stitch of every row into the first stitch, at the base of the turning chain.
- The chain at the start of a round never counts as a stitch. Work the first stitch of the round into the stitch at its base, where the round was joined.
- Odd-numbered rows are right side rows. Mark the right side of each piece with a stitch marker or a scrap of yarn.
- Lfpd over next 3 sts: work one lfpd over each of them. On the wrong side rows work single crochet in every st, the lfpd too.
- An lfpd that stands straight above another lfpd goes around the post of that lfpd; where there is a single crochet 2 rows below, it goes around the post of that single crochet. The long stitches of a diamond step aside by one st from one right side row to the next.
- Sc2tog in back loops only: an sc2tog with the hook in the back loop of each of the two stitches. A decrease counts as one stitch.
- In the rounds of fpdc and bpdc work fpdc around each fpdc and bpdc around each bpdc of the round below; in the first of them work them in turn around the dc.
- The ribs are worked sideways in single crochet in the back loop (UK: double crochet). The pieces are worked up from a long edge of a rib. The rib draws in: it is a little narrower than the piece above it.
- Sew every seam with the yarn needle and the same yarn: cut a length about three times as long as the seam.
- In back loop only: insert the hook under the loop of the stitch that is farther from you, and leave the nearer loop free.

Instructions

M, to fit chest 39 in (99 cm). US terms.

ch chain, **sl st** slip stitch, **sc** single crochet (UK double crochet), **dc** double crochet (UK treble), **Rnd** round, **st** stitch.
RS right side, the one that shows.
[ ] 3 times: work what is inside 3 times in all.
(8 sc): the stitches you have when the row is done. **How to read a pattern**.

Special stitches

sc2tog (single crochet 2 stitches together (UK double crochet 2 together)): Insert the hook in the next stitch and pull up a loop, insert the hook in the following stitch and pull up a loop (3 loops on the hook); yarn over and pull through all 3 loops.

fpdc (front post double crochet (UK front post treble)): Yarn over, insert the hook from the front to the back and to the front again around the post of the stitch named, pull up a loop, [yarn over and pull through 2 loops] twice. The front is the side that faces you. A post stitch takes the place of the stitch it is worked around: do not work into the top of that stitch as well.

bpdc (back post double crochet (UK back post treble)): As fpdc, but insert the hook from the back to the front and to the back again around the post.

lfpd (long front post double crochet (UK long front post treble)): Worked on right side rows, around the post of the stitch 2 rows below, straight down from the next st. Yarn over, insert the hook from the front to the back and to the front again around that post, pull up a loop as tall as the row you are in, [yarn over and pull through 2 loops] twice. The lfpd takes the place of the next st of the row just below: skip that st, which lies behind the lfpd.

For your own crochet, gifts and handmade pieces you sell. Do not resell or share this PDF or copies of it.

Hem rib: make 2, one for the back and one for the front

☐ **Foundation**	Ch 9.	
☐ **Row 1 (RS)**	Sc in 2nd ch from hook and in each ch across	(8 sc)
☐ **Rows 2 to 71**	Ch 1, turn; sc in back loop only of each st across	(8 sc)

2 3 4 5 6 7 8 9 10 11 12 13 14 15 16 17 18 19 20 21 22 23 24 25 26 27 28 29
30 31 32 33 34 35 36 37 38 39 40 41 42 43 44 45 46 47 48 49 50 51 52 53 54 55 56 57
58 59 60 61 62 63 64 65 66 67 68 69 70 71

☐ **End**	Fasten off.	

Back

☐ **Foundation**	The chest is worked in rows 41 to 81: 3 columns of 2 diamonds, one above the other, with 4 ladders beside and between the columns, and 6 plain sts at each end. Rows 37 and 39, worked in the back loop only, make the two ridges below it; rows 83 to 90, worked in the back loop only, are the ridged bands of the shoulders. Hold a hem rib with one long edge at the top. Join the yarn at the right-hand end of that edge; ch 1, sc in the end of each rib row across (71 sc). This is row 1, and a right side row.	
☐ **Rows 2 to 36**	Ch 1, turn; sc in each st across	(71 sc)

2 3 4 5 6 7 8 9 10 11 12 13 14 15 16 17 18 19 20 21 22 23 24 25 26 27 28 29
30 31 32 33 34 35 36

☐ **Row 37**	Ch 1, turn; sc in back loop only of each st across	(71 sc)
☐ **Row 38**	Ch 1, turn; sc in each st across	(71 sc)
☐ **Row 39**	Ch 1, turn; sc in back loop only of each st across	(71 sc)
☐ **Row 40**	Ch 1, turn; sc in each st across	(71 sc)
☐ **Row 41**	Ch 1, turn; sc in next 6 sts, **[**lfpd over next 5 sts, sc in next 6 sts, lfpd over next st, sc in next 6 sts**] 3 times**, lfpd over next 5 sts, sc in next 6 sts	(48 sc, 23 lfpds)
☐ **Row 42**	Ch 1, turn; sc in each st across	(71 sc)
☐ **Row 43**	Ch 1, turn; sc in next 6 sts, **[**lfpd over next st, sc in next 3 sts, lfpd over next st, sc in next 5 sts, lfpd over next st, sc in next st, lfpd over next st, sc in next 5 sts**] 3 times**, lfpd over next st, sc in next 3 sts, lfpd over next st, sc in next 6 sts	(57 sc, 14 lfpds)
☐ **Row 44**	Ch 1, turn; sc in each st across	(71 sc)
☐ **Row 45**	Ch 1, turn; sc in next 6 sts, **[**lfpd over next 5 sts, sc in next 4 sts, lfpd over next st, sc in next 3 sts, lfpd over next st, sc in next 4 sts**] 3 times**, lfpd over next 5 sts, sc in next 6 sts	(45 sc, 26 lfpds)
☐ **Row 46**	Ch 1, turn; sc in each st across	(71 sc)

For your own crochet, gifts and handmade pieces you sell. Do not resell or share this PDF or copies of it.

☐ **Row 47**	Ch 1, turn; sc in next 6 sts, **[**lfpd over next st, sc in next 3 sts, lfpd over next st, sc in next 3 sts, lfpd over next st, sc in next 5 sts, lfpd over next st, sc in next 3 sts**] 3 times**, lfpd over next st, sc in next 3 sts, lfpd over next st, sc in next 6 sts	(57 sc, 14 lfpds)
☐ **Row 48**	Ch 1, turn; sc in each st across	(71 sc)
☐ **Row 49**	Ch 1, turn; sc in next 6 sts, **[**lfpd over next 5 sts, sc in next 2 sts, lfpd over next st, sc in next 3 sts, lfpd over next st, sc in next 3 sts, lfpd over next st, sc in next 2 sts**] 3 times**, lfpd over next 5 sts, sc in next 6 sts	(42 sc, 29 lfpds)
☐ **Row 50**	Ch 1, turn; sc in each st across	(71 sc)
☐ **Row 51**	Ch 1, turn; sc in next 6 sts, **[**lfpd over next st, sc in next 3 sts, lfpd over next st, sc in next st, lfpd over next st, sc in next 4 sts, lfpd over next st, sc in next 4 sts, lfpd over next st, sc in next st**] 3 times**, lfpd over next st, sc in next 3 sts, lfpd over next st, sc in next 6 sts	(54 sc, 17 lfpds)
☐ **Row 52**	Ch 1, turn; sc in each st across	(71 sc)
☐ **Row 53**	Ch 1, turn; sc in next 6 sts, **[**lfpd over next 5 sts, sc in next 2 sts, lfpd over next st, sc in next 3 sts, lfpd over next st, sc in next 3 sts, lfpd over next st, sc in next 2 sts**] 3 times**, lfpd over next 5 sts, sc in next 6 sts	(42 sc, 29 lfpds)
☐ **Row 54**	Ch 1, turn; sc in each st across	(71 sc)
☐ **Row 55**	Ch 1, turn; sc in next 6 sts, **[**lfpd over next st, sc in next 3 sts, lfpd over next st, sc in next 3 sts, lfpd over next st, sc in next 5 sts, lfpd over next st, sc in next 3 sts**] 3 times**, lfpd over next st, sc in next 3 sts, lfpd over next st, sc in next 6 sts	(57 sc, 14 lfpds)
☐ **Row 56**	Ch 1, turn; sc in each st across	(71 sc)
☐ **Row 57**	Ch 1, turn; sc in next 6 sts, **[**lfpd over next 5 sts, sc in next 4 sts, lfpd over next st, sc in next 3 sts, lfpd over next st, sc in next 4 sts**] 3 times**, lfpd over next 5 sts, sc in next 6 sts	(45 sc, 26 lfpds)
☐ **Row 58**	Ch 1, turn; sc in each st across	(71 sc)
☐ **Row 59**	Ch 1, turn; sc in next 6 sts, **[**lfpd over next st, sc in next 3 sts, lfpd over next st, sc in next 5 sts, lfpd over next st, sc in next st, lfpd over next st, sc in next 5 sts**] 3 times**, lfpd over next st, sc in next 3 sts, lfpd over next st, sc in next 6 sts	(57 sc, 14 lfpds)
☐ **Row 60**	Ch 1, turn; sc in each st across	(71 sc)
☐ **Rows 61 to 80**	Repeat Rows 41 to 60, once more	(71 sc)

61 62 63 64 65 66 67 68 69 70 71 72 73 74 75 76 77 78 79 80

For your own crochet, gifts and handmade pieces you sell. Do not resell or share this PDF or copies of it.

☐ **Row 81**	Ch 1, turn; sc in next 6 sts, **[**lfpd over next 5 sts, sc in next 6 sts, lfpd over next st, sc in next 6 sts**] 3 times**, lfpd over next 5 sts, sc in next 6 sts	(48 sc, 23 lfpds)
☐ **Row 82**	Ch 1, turn; sc in each st across	(71 sc)
☐ **Rows 83 to 90**	Ch 1, turn; sc in back loop only of each st across	(71 sc)

83 84 85 86 87 88 89 90

☐ **End**	The back measures about 21¾ in (55 cm) wide and 26½ in (67.5 cm) long, with the rib. Fasten off.	

Front

☐ **Foundation**	The front is worked like the back as far as the neck. Hold a hem rib with one long edge at the top. Join the yarn at the right-hand end of that edge; ch 1, sc in the end of each rib row across (71 sc). This is row 1, and a right side row.	
☐ **Rows 2 to 36**	Ch 1, turn; sc in each st across	(71 sc)

2 3 4 5 6 7 8 9 10 11 12 13 14 15 16 17 18 19 20 21 22 23 24 25 26 27 28 29 30 31 32 33 34 35 36

☐ **Row 37**	Ch 1, turn; sc in back loop only of each st across	(71 sc)
☐ **Row 38**	Ch 1, turn; sc in each st across	(71 sc)
☐ **Row 39**	Ch 1, turn; sc in back loop only of each st across	(71 sc)
☐ **Row 40**	Ch 1, turn; sc in each st across	(71 sc)
☐ **Row 41**	Ch 1, turn; sc in next 6 sts, **[**lfpd over next 5 sts, sc in next 6 sts, lfpd over next st, sc in next 6 sts**] 3 times**, lfpd over next 5 sts, sc in next 6 sts	(48 sc, 23 lfpds)
☐ **Row 42**	Ch 1, turn; sc in each st across	(71 sc)
☐ **Row 43**	Ch 1, turn; sc in next 6 sts, **[**lfpd over next st, sc in next 3 sts, lfpd over next st, sc in next 5 sts, lfpd over next st, sc in next st, lfpd over next st, sc in next 5 sts**] 3 times**, lfpd over next st, sc in next 3 sts, lfpd over next st, sc in next 6 sts	(57 sc, 14 lfpds)
☐ **Row 44**	Ch 1, turn; sc in each st across	(71 sc)
☐ **Row 45**	Ch 1, turn; sc in next 6 sts, **[**lfpd over next 5 sts, sc in next 4 sts, lfpd over next st, sc in next 3 sts, lfpd over next st, sc in next 4 sts**] 3 times**, lfpd over next 5 sts, sc in next 6 sts	(45 sc, 26 lfpds)
☐ **Row 46**	Ch 1, turn; sc in each st across	(71 sc)
☐ **Row 47**	Ch 1, turn; sc in next 6 sts, **[**lfpd over next st, sc in next 3 sts, lfpd over next st, sc in next 3 sts, lfpd over next st, sc in next 5 sts, lfpd over next st, sc in next 3 sts**] 3 times**, lfpd over next st, sc in next 3 sts, lfpd over next st, sc in next 6 sts	(57 sc, 14 lfpds)
☐ **Row 48**	Ch 1, turn; sc in each st across	(71 sc)

For your own crochet, gifts and handmade pieces you sell. Do not resell or share this PDF or copies of it.

☐ **Row 49**	Ch 1, turn; sc in next 6 sts, **[**lfpd over next 5 sts, sc in next 2 sts, lfpd over next st, sc in next 3 sts, lfpd over next st, sc in next 3 sts, lfpd over next st, sc in next 2 sts**] 3 times**, lfpd over next 5 sts, sc in next 6 sts	(42 sc, 29 lfpds)
☐ **Row 50**	Ch 1, turn; sc in each st across	(71 sc)
☐ **Row 51**	Ch 1, turn; sc in next 6 sts, **[**lfpd over next st, sc in next 3 sts, lfpd over next st, sc in next st, lfpd over next st, sc in next 4 sts, lfpd over next st, sc in next 4 sts, lfpd over next st, sc in next st**] 3 times**, lfpd over next st, sc in next 3 sts, lfpd over next st, sc in next 6 sts	(54 sc, 17 lfpds)
☐ **Row 52**	Ch 1, turn; sc in each st across	(71 sc)
☐ **Row 53**	Ch 1, turn; sc in next 6 sts, **[**lfpd over next 5 sts, sc in next 2 sts, lfpd over next st, sc in next 3 sts, lfpd over next st, sc in next 3 sts, lfpd over next st, sc in next 2 sts**] 3 times**, lfpd over next 5 sts, sc in next 6 sts	(42 sc, 29 lfpds)
☐ **Row 54**	Ch 1, turn; sc in each st across	(71 sc)
☐ **Row 55**	Ch 1, turn; sc in next 6 sts, **[**lfpd over next st, sc in next 3 sts, lfpd over next st, sc in next 3 sts, lfpd over next st, sc in next 5 sts, lfpd over next st, sc in next 3 sts**] 3 times**, lfpd over next st, sc in next 3 sts, lfpd over next st, sc in next 6 sts	(57 sc, 14 lfpds)
☐ **Row 56**	Ch 1, turn; sc in each st across	(71 sc)
☐ **Row 57**	Ch 1, turn; sc in next 6 sts, **[**lfpd over next 5 sts, sc in next 4 sts, lfpd over next st, sc in next 3 sts, lfpd over next st, sc in next 4 sts**] 3 times**, lfpd over next 5 sts, sc in next 6 sts	(45 sc, 26 lfpds)
☐ **Row 58**	Ch 1, turn; sc in each st across	(71 sc)
☐ **Row 59**	Ch 1, turn; sc in next 6 sts, **[**lfpd over next st, sc in next 3 sts, lfpd over next st, sc in next 5 sts, lfpd over next st, sc in next st, lfpd over next st, sc in next 5 sts**] 3 times**, lfpd over next st, sc in next 3 sts, lfpd over next st, sc in next 6 sts	(57 sc, 14 lfpds)
☐ **Row 60**	Ch 1, turn; sc in each st across	(71 sc)
☐ **Row 61**	Ch 1, turn; sc in next 6 sts, **[**lfpd over next 5 sts, sc in next 6 sts, lfpd over next st, sc in next 6 sts**] 3 times**, lfpd over next 5 sts, sc in next 6 sts	(48 sc, 23 lfpds)
☐ **Row 62**	Ch 1, turn; sc in each st across	(71 sc)
☐ **Row 63**	Ch 1, turn; sc in next 6 sts, **[**lfpd over next st, sc in next 3 sts, lfpd over next st, sc in next 5 sts, lfpd over next st, sc in next st, lfpd over next st, sc in next 5 sts**] 3 times**, lfpd over next st, sc in next 3 sts, lfpd over next st, sc in next 6 sts	(57 sc, 14 lfpds)
☐ **Row 64**	Ch 1, turn; sc in each st across	(71 sc)

For your own crochet, gifts and handmade pieces you sell. Do not resell or share this PDF or copies of it.

☐ **Row 65**	Ch 1, turn; sc in next 6 sts, **[**lfpd over next 5 sts, sc in next 4 sts, lfpd over next st, sc in next 3 sts, lfpd over next st, sc in next 4 sts**] 3 times**, lfpd over next 5 sts, sc in next 6 sts	(45 sc, 26 lfpds)
☐ **Row 66**	Ch 1, turn; sc in each st across	(71 sc)
☐ **Row 67**	Ch 1, turn; sc in next 6 sts, **[**lfpd over next st, sc in next 3 sts, lfpd over next st, sc in next 3 sts, lfpd over next st, sc in next 5 sts, lfpd over next st, sc in next 3 sts**] 3 times**, lfpd over next st, sc in next 3 sts, lfpd over next st, sc in next 6 sts	(57 sc, 14 lfpds)
☐ **Row 68**	Ch 1, turn; sc in each st across	(71 sc)
☐ **Row 69**	Ch 1, turn; sc in next 6 sts, **[**lfpd over next 5 sts, sc in next 2 sts, lfpd over next st, sc in next 3 sts, lfpd over next st, sc in next 3 sts, lfpd over next st, sc in next 2 sts**] 3 times**, lfpd over next 5 sts, sc in next 6 sts	(42 sc, 29 lfpds)
☐ **Row 70**	Ch 1, turn; sc in each st across	(71 sc)
☐ **Row 71**	Ch 1, turn; sc in next 6 sts, **[**lfpd over next st, sc in next 3 sts, lfpd over next st, sc in next st, lfpd over next st, sc in next 4 sts, lfpd over next st, sc in next 4 sts, lfpd over next st, sc in next st**] 3 times**, lfpd over next st, sc in next 3 sts, lfpd over next st, sc in next 6 sts	(54 sc, 17 lfpds)
☐ **Row 72**	Ch 1, turn; sc in each st across	(71 sc)
☐ **Row 73**	Ch 1, turn; sc in next 6 sts, **[**lfpd over next 5 sts, sc in next 2 sts, lfpd over next st, sc in next 3 sts, lfpd over next st, sc in next 3 sts, lfpd over next st, sc in next 2 sts**] 3 times**, lfpd over next 5 sts, sc in next 6 sts	(42 sc, 29 lfpds)
☐ **Row 74**	Ch 1, turn; sc in each st across	(71 sc)
☐ **Row 75**	Ch 1, turn; sc in next 6 sts, **[**lfpd over next st, sc in next 3 sts, lfpd over next st, sc in next 3 sts, lfpd over next st, sc in next 5 sts, lfpd over next st, sc in next 3 sts**] 3 times**, lfpd over next st, sc in next 3 sts, lfpd over next st, sc in next 6 sts	(57 sc, 14 lfpds)
☐ **Row 76**	Ch 1, turn; sc in each st across	(71 sc)
☐ **End**	Do not fasten off.	

Front, first side of the neck

☐ **Foundation**	Go on from row 76 of the front. This is the left side as worn. The neck edge is at the end of the next row.	
☐ **Row 77**	Ch 1, turn; sc in next 6 sts, lfpd over next 5 sts, sc in next 4 sts, lfpd over next st, sc in next 3 sts, lfpd over next st, sc in next 4 sts, lfpd over next 3 sts, sc in next st, leave the last 43 sts unworked	(18 sc, 10 lfpds)
☐ **Row 78**	Ch 1, turn; sc2tog, sc in each st across	(27 sc)

For your own crochet, gifts and handmade pieces you sell. Do not resell or share this PDF or copies of it.

☐ **Row 79**	Ch 1, turn; sc in next 6 sts, lfpd over next st, sc in next 3 sts, lfpd over next st, sc in next 5 sts, lfpd over next st, sc in next st, lfpd over next st, sc in next 5 sts, lfpd over next st, sc2tog	(21 sc, 5 lfpds)
☐ **Row 80**	Ch 1, turn; sc2tog, sc in each st across	(25 sc)
☐ **Row 81**	Ch 1, turn; sc in next 6 sts, lfpd over next 5 sts, sc in next 6 sts, lfpd over next st, sc in next 5 sts, sc2tog	(18 sc, 6 lfpds)
☐ **Row 82**	Ch 1, turn; sc2tog, sc in each st across	(23 sc)
☐ **Row 83**	Ch 1, turn; sc in back loop only of each st across to last 2 sts, sc2tog in back loops only	(22 sc)
☐ **Rows 84 to 90**	Ch 1, turn; sc in back loop only of each st across 84 85 86 87 88 89 90	(22 sc)
☐ **End**	The 22 sts left are the shoulder. Fasten off.	

Front, second side of the neck

☐ **Foundation**	Go back to row 76 of the front, with the same side facing you as for row 77 of the first side. Skip the next 15 unworked sts of row 76 for the neck and join the yarn in the next st. This is the right side as worn. The first st of row 77 goes in the joining st. The neck edge is at the beginning of that row.	
☐ **Row 77**	Ch 1; sc in next st, lfpd over next 3 sts, sc in next 4 sts, lfpd over next st, sc in next 3 sts, lfpd over next st, sc in next 4 sts, lfpd over next 5 sts, sc in next 6 sts	(18 sc, 10 lfpds)
☐ **Row 78**	Ch 1, turn; sc in each st across to last 2 sts, sc2tog	(27 sc)
☐ **Row 79**	Ch 1, turn; sc2tog, lfpd over next st, sc in next 5 sts, lfpd over next st, sc in next st, lfpd over next st, sc in next 5 sts, lfpd over next st, sc in next 3 sts, lfpd over next st, sc in next 6 sts	(21 sc, 5 lfpds)
☐ **Row 80**	Ch 1, turn; sc in each st across to last 2 sts, sc2tog	(25 sc)
☐ **Row 81**	Ch 1, turn; sc2tog, sc in next 5 sts, lfpd over next st, sc in next 6 sts, lfpd over next 5 sts, sc in next 6 sts	(18 sc, 6 lfpds)
☐ **Row 82**	Ch 1, turn; sc in each st across to last 2 sts, sc2tog	(23 sc)
☐ **Row 83**	Ch 1, turn; sc2tog in back loops only, sc in back loop only of each st across	(22 sc)
☐ **Rows 84 to 90**	Ch 1, turn; sc in back loop only of each st across 84 85 86 87 88 89 90	(22 sc)
☐ **End**	The 22 sts left are the shoulder. Fasten off.	

For your own crochet, gifts and handmade pieces you sell. Do not resell or share this PDF or copies of it.

Cuff rib: make 2

☐ **Foundation**	Ch 9.	
☐ **Row 1 (RS)**	Sc in 2nd ch from hook and in each ch across	(8 sc)
☐ **Rows 2 to 32**	Ch 1, turn; sc in back loop only of each st across	(8 sc)

2 3 4 5 6 7 8 9 10 11 12 13 14 15 16 17 18 19 20 21 22 23 24 25 26 27 28 29 30 31 32

☐ **End**	Fasten off.	

Sleeve: make 2

☐ **Foundation**	Rows 53, 55 and 57, worked in the back loop only, make three ridges below the top of the sleeve. Hold a cuff rib with one long edge at the top. Join the yarn at the right-hand end of that edge; ch 1, sc in the end of each rib row across (32 sc). This is row 1, and a right side row.	
☐ **Row 2**	Ch 1, turn; sc in each st across	(32 sc)
☐ **Row 3**	Ch 1, turn; 2 sc in first st, sc in each st across to last st, 2 sc in last st	(34 sc)
☐ **Rows 4 to 5**	Ch 1, turn; sc in each st across	(34 sc)

4 5

☐ **Rows 6 to 44**	Repeat Rows 3 to 5, 13 more times (36, 38, 40, 42, 44, 46, 48, 50, 52, 54, 56, 58, 60 sc at the ends of the repeats)	(60 sc)

6 7 8 9 10 11 12 13 14 15 16 17 18 19 20 21 22 23 24 25 26 27 28 29 30 31 32 33 34 35 36 37 38 39 40 41 42 43 44

☐ **Rows 45 to 52**	Ch 1, turn; sc in each st across	(60 sc)

45 46 47 48 49 50 51 52

☐ **Row 53**	Ch 1, turn; sc in back loop only of each st across	(60 sc)
☐ **Rows 54 to 57**	Repeat Rows 52 and 53, 2 more times	(60 sc)

54 55 56 57

☐ **Rows 58 to 59**	Ch 1, turn; sc in each st across	(60 sc)

58 59

☐ **End**	The sleeve measures about 18½ in (47 cm) across the top and 18¼ in (46.5 cm) long, with the cuff. Fasten off.	

For your own crochet, gifts and handmade pieces you sell. Do not resell or share this PDF or copies of it.

Neckband

☐ **Foundation**	Work this at step 2 of Assembly. With the right side facing, join the yarn in the first open st of the back neck, at the right shoulder seam (as worn); ch 1, sc in each of the 27 open sts of the back neck, sc in the end of each of the 14 rows down the left side of the neck (14 sc), sc in each of the 15 sts left at the front, and sc in the end of each of the 14 rows up the right side of the neck (14 sc); 70 sc in all; join with sl st in first sc. This is rnd 1.	
☐ **Rnd 2**	Ch 2; dc in each st around; join with sl st in first dc	(70 dc)
☐ **Rnds 3 to 4** 3 4	Ch 2; **[**fpdc around next st, bpdc around next st**] 35 times**; join with sl st in first fpdc	(35 fpdcs, 35 bpdcs)
☐ **End**	Fasten off.	

Assembly

1. Shoulders: lay the front on the back with right sides together. Sew the 22 sts of each shoulder of the front to the 22 sts at that end of the top edge of the back. The middle 27 sts of the back stay open for the neck.

2. Neckband: work it now, as written above.

3. Markers: at each side edge of the back and of the front, place a marker in the end of row 56. The 35 rows from the marker to the shoulder seam, about 9¼ in (23.5 cm), are half of the armhole.

4. Sleeves: with right sides together, put the middle of the top edge of a sleeve at a shoulder seam and its two ends at the markers. Sew the top edge on: 30 sts of the sleeve to the 35 row ends of the front, and the other 30 sts to the 35 row ends of the back. From the shoulder seam to each marker sew 6 sts to every 7 row ends, 5 times.

5. Sides and sleeves: fold the sweater at the shoulders, right sides together. Sew each sleeve seam from the cuff edge to the underarm and go on down the side seam to the lower edge. At the two ribs the edges are the foundation chain and the last row of a rib: sew them stitch to stitch, 8 at the cuff and 8 at the hem. Between the ribs sew row end to row end.

Finishing

- Weave in all the ends. Wash as the yarn label says and lay flat to the measurements to dry.

In all: 4 pieces.

Found a mistake in this pattern? Tell us at flossfield.com, under Make a request.

For your own crochet, gifts and handmade pieces you sell. Do not resell or share this PDF or copies of it.