Men's raglan hoodie in two colors

M, to fit chest 39 in (99 cm) · US terms



Finished size
About 44½ in (113 cm) at the chest and about 27 in (68.5 cm) long
To fit a chest of 39 in (99 cm)

Skill
Intermediate
Moss stitch with increases at the edges, raglan seams, a shaped hood, ribs in rounds

Yarn
Light (3), 2 colors

Hook
4.5 mm (US 7)

Gauge
16 stitches and 18½ rows to 4 in (10 cm)
In moss stitch.

What you need

Yarn A: forest, main color **about 1,250 yd (1,143 m), an estimate**
Yarn B: oat, contrast **about 700 yd (640 m), an estimate**
By weight: about 780 g in all, an estimate, where 100 g is 250 yd (229 m).
Hook: 4.5 mm (US 7), or the size that gives you the gauge. Also: yarn needle, scissors, tape measure and stitch markers.

To find how many balls: divide by the length on your yarn's label and round up. Buy them from one dye lot. The estimate is from the stitches of this size at this gauge.

Sizes

Size	To fit chest	Yarn, an estimate	Chest	Length from the back neck	Raglan depth at the back	Upper sleeve	Upper sleeve	Cuff around	Neck edge around	Hood height
S	35 in (89 cm)	about 1,825 yd (1,669 m)	40½ in (103 cm)	26½ in (67.5 cm)	10½ in (26.5 cm)	18½ in (47 cm)	15 in (38 cm)	9½ in (24 cm)	24 in (61 cm)	13½ in (34.5 cm)
M (this file)	**39 in (99 cm)**	**about 1,950 yd (1,783 m)**	**44½ in (113 cm)**	**27 in (68.5 cm)**	**10¾ in (27.5 cm)**	**19 in (48.5 cm)**	**16 in (40.5 cm)**	**10 in (25.5 cm)**	**24 in (61 cm)**	**13½ in (34.5 cm)**
L	43 in (109 cm)	about 2,100 yd (1,920 m)	48½ in (123 cm)	27½ in (70 cm)	11¼ in (28.5 cm)	20 in (51 cm)	18 in (45.5 cm)	10 in (25.5 cm)	24 in (61 cm)	13½ in (34.5 cm)
XL	47 in (119.5 cm)	about 2,225 yd (2,035 m)	52½ in (133.5 cm)	28 in (71 cm)	12 in (30.5 cm)	20½ in (52 cm)	19 in (48.5 cm)	10 in (25.5 cm)	23 in (58.5 cm)	13½ in (34.5 cm)

For your own crochet, gifts and handmade pieces you sell. Do not resell or share this PDF or copies of it.

2X	51 in (129.5 cm)	about 2,400 yd (2,195 m)	56½ in (143.5 cm)	28¼ in (72 cm)	12½ in (32 cm)	21 in (53.5 cm)	20 in (51 cm)	10½ in (26.5 cm)	25 in (63.5 cm)	13½ in (34.5 cm)
3X	55 in (139.5 cm)	about 2,550 yd (2,332 m)	60½ in (153.5 cm)	29¼ in (74.5 cm)	13 in (33 cm)	21½ in (54.5 cm)	21 in (53.5 cm)	11 in (28 cm)	22½ in (57 cm)	13½ in (34.5 cm)
4X	59 in (150 cm)	about 2,675 yd (2,446 m)	64½ in (164 cm)	29½ in (75 cm)	13½ in (34.5 cm)	22 in (56 cm)	22 in (56 cm)	11 in (28 cm)	24½ in (62 cm)	13½ in (34.5 cm)

Schematic

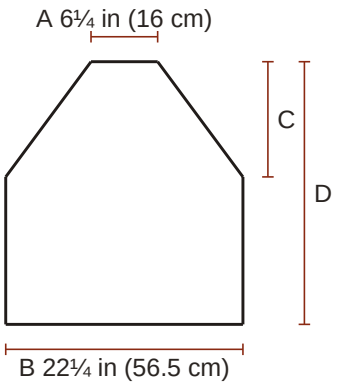

Back (the front begins lower)
A the width
B half the chest
C 10¾ in (27.5 cm), the upper part
D 24¾ in (62.5 cm), from top to bottom

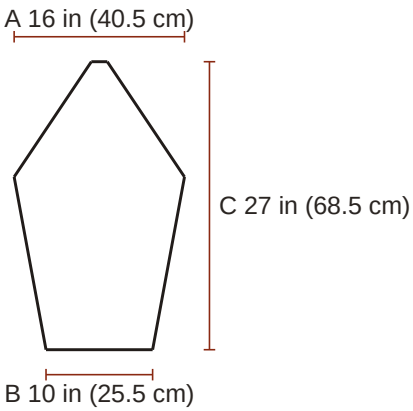

Sleeve (make 2)
A the top of the sleeve, opened flat
B around the cuff
C the sleeve

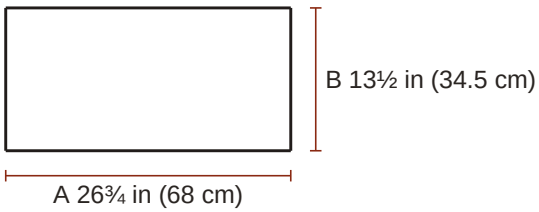

Hood
A the whole width
B the hood height

For your own crochet, gifts and handmade pieces you sell. Do not resell or share this PDF or copies of it.

Gauge

16 stitches and 18½ rows to 4 in (10 cm) in moss stitch.

Count every stitch and every chain as 1; the skipped stitches under the chains are not counted again.

> **The swatch.** A test piece to measure and pull out. It is not the start of the pattern. Ch 26. Row 1 (RS): Sc in 2nd ch from hook and in each ch across. Row 2: Ch 1, turn; sc in first st, [ch 1, skip next st, sc in next st] 12 times. Row 3: Ch 1, turn; sc in first st, sc in next ch-1 sp, [ch 1, sc in next ch-1 sp] 11 times, sc in last st. Row 4: Ch 1, turn; sc in first st, [ch 1, sc in next ch-1 sp] 11 times, ch 1, sc in last st. Rows 5 to 28: Repeat Rows 3 and 4, 12 more times. The swatch of 28 rows is about 6¼ in (16 cm) wide and 6 in (15 cm) high. Measure 4 in (10 cm) in the middle. Use a larger hook if your swatch is small, a smaller one if it is large. Single crochet of the sleeves, the pocket, the hood and the edgings (UK: double crochet): 16 sts and 18.5 rows to 4 in (10 cm), the same as the moss stitch. Ribs of the hem and the cuffs: rounds of front and back post double crochet, 9.5 rounds to 4 in (10 cm). The rib draws in: it is a little narrower than the piece above it, and stretches.

Notes

- The finished chest is 5½ in (14 cm) wider than the body measurement at each size. Choose by the finished measurement you like; no fit is promised beyond the measurements given.
- The turning chain (ch 1 for single crochet, ch 2 for double crochet) never counts as a stitch. Work the first stitch of every row into the first stitch, at the base of the turning chain.
- The chain at the start of a round never counts as a stitch. Work the first stitch of the round into the stitch at its base, where the round was joined.
- Odd-numbered rows are right side rows. The outside of the pocket is the side of its even-numbered rows. Mark the right side of each piece with a stitch marker or a scrap of yarn.
- Moss stitch, from row 3 of the back and of the front to the row before the last: work only in the first st, in the ch-1 sps and in the last st. In a ch-1 sp put the hook under the whole chain. The sc between two ch-1 sps is passed over; the ch 1 of the new row lies over it. Row 2 and the last row are worked as their own words say.
- Moss stitch, the edges: look at the row below. Where it begins and ends with two sc, the second sc and the next-to-last sc are passed over too, with a ch 1 over each. Where it begins with sc, ch 1 and ends with ch 1, sc, no sc lies between the edge st and the ch-1 sp beside it, so nothing is passed over there. A ch 1 that stands at that place has no sc under it: it makes the row one place wider at that edge. Two sc in the first st and 2 sc in the last st make the row one place wider at each edge too.
- "[ch 1, sc in next ch-1 sp] until every ch-1 sp is worked" means: do what stands in the brackets again and again along the row, until no ch-1 sp is left.
- The count at the end of a moss stitch row gives its sc and its ch-1 sps; the two numbers together are the width of the row. In the raglan some rows make the piece wider by one place at each edge and some do not, though their words are much alike: follow the count.
- A decrease counts as one stitch.
- Left and right are those of the person who wears the hoodie.
- Whip stitch: put the needle in through both edges from the back to the front, take the yarn over the edge, and do the same again a short step farther on.
- Sew every seam of the finishing with whip stitch (raglan, side and sleeve seams, pocket, top of the hood, hood to the neck, and the lap of the hood). Use the yarn needle and the yarn that the step names, and cut a length about three times as long as the seam. Work one whip stitch for each row end, st or ch that the step names; where two chs of one edge meet one row end of the other, work two whip stitches into that row end, one for each ch.

For your own crochet, gifts and handmade pieces you sell. Do not resell or share this PDF or copies of it.

- For the ribs, work around the post (the upright part) of the stitch below, not into its top.
- In back loop only: insert the hook under the loop of the stitch that is farther from you, and leave the nearer loop free.

Instructions

M, to fit chest 39 in (99 cm). US terms.

ch chain, **sl st** slip stitch, **sc** single crochet (UK double crochet), **dc** double crochet (UK treble), **Rnd** round, **st** stitch, **sp** space.

RS right side, the one that shows.

ch-1 sp: the gap under the one chain; the hook goes in the gap.

[ ] 12 times: work what is inside 12 times in all.

(25 sc): the stitches you have when the row is done. **How to read a pattern**.

Special stitches

sc2tog (single crochet 2 stitches together (UK double crochet 2 together)): Insert the hook in the next stitch and pull up a loop, insert the hook in the following stitch and pull up a loop (3 loops on the hook); yarn over and pull through all 3 loops.

fpdc (front post double crochet (UK front post treble)): Yarn over, insert the hook from the front to the back and to the front again around the post of the stitch named, pull up a loop, [yarn over and pull through 2 loops] twice. The front is the side that faces you. A post stitch takes the place of the stitch it is worked around: do not work into the top of that stitch as well.

bpdc (back post double crochet (UK back post treble)): As fpdc, but insert the hook from the back to the front and to the back again around the post.

Back

Yarn A, forest.

☐ **Foundation**	Worked from the neck down. Rows 1 to 50 are the raglan, where the piece grows at both edges; the rest is straight. With yarn A, ch 26.	
☐ **Row 1 (RS)**	Sc in 2nd ch from hook and in each ch across	(25 sc)
☐ **Row 2**	Ch 1, turn; sc in first st, **[**ch 1, skip next st, sc in next st**] 12 times**	(13 sc, 12 ch-1 sps)
☐ **Rows 3 to 4** 3 4	Ch 1, turn; sc in first st, [ch 1, sc in next ch-1 sp] until every ch-1 sp is worked, ch 1, sc in last st	(15 sc; 13, 14 ch-1 sps)
☐ **Row 5**	Ch 1, turn; sc in first st, sc in next ch-1 sp, [ch 1, sc in next ch-1 sp] until every ch-1 sp is worked, sc in last st	(16 sc, 13 ch-1 sps)
☐ **Rows 6 to 7** 6 7	Ch 1, turn; 2 sc in first st, [ch 1, sc in next ch-1 sp] until every ch-1 sp is worked, ch 1, 2 sc in last st	(18 sc; 14, 15 ch-1 sps)
☐ **Rows 8 to 10** 8 9 10	Ch 1, turn; sc in first st, [ch 1, sc in next ch-1 sp] until every ch-1 sp is worked, ch 1, sc in last st	(19 sc; 16, 18 ch-1 sps)

For your own crochet, gifts and handmade pieces you sell. Do not resell or share this PDF or copies of it.

☐ **Rows 11 to 46** Repeat Rows 5 to 10,
6 more times (23, 27, 31, 35, 39, 43 sc; 22, 26, 30, 34, 38, 42 ch-1 sps at the ends of the repeats) (43 sc; 22, 42 ch-1 sps)

11 12 13 14 15 16 17 18 19 20 21 22 23 24 25 26 27 28 29 30 31 32 33 34 35 36 37 38 39 40 41 42 43 44 45 46

☐ **Row 47** Ch 1, turn; sc in first st, sc in next ch-1 sp,
[ch 1, sc in next ch-1 sp] until every ch-1 sp is worked, sc in last st (44 sc, 41 ch-1 sps)

☐ **Rows 48 to 49** Ch 1, turn; 2 sc in first st, [ch 1, sc in next ch-1 sp] until every ch-1 sp is worked,
ch 1, 2 sc in last st (46 sc; 42, 43 ch-1 sps)

48 49

☐ **Row 50** Ch 1, turn; sc in first st, [ch 1, sc in next ch-1 sp] until every ch-1 sp is worked, ch 1,
sc in last st (45 sc, 44 ch-1 sps)

☐ **Row 51** Ch 1, turn; sc in first st, sc in next ch-1 sp,
[ch 1, sc in next ch-1 sp] until every ch-1 sp is worked, sc in last st (46 sc, 43 ch-1 sps)

☐ **Rows 52 to 113** Repeat Rows 50 and 51, 31 more times (46 sc, 43 ch-1 sps)

52 53 54 55 56 57 58 59 60 61 62 63 64 65 66 67 68 69 70 71 72 73 74 75 76 77 78 79 80 81 82 83 84 85 86 87 88 89 90 91 92 93 94 95 96 97 98 99 100 101 102 103 104 105 106 107 108 109 110 111 112 113

☐ **Row 114** Ch 1, turn; sc in next 2 sts, **[**sc in next ch-1 sp, sc in next st**] 43 times**, sc in next st (89 sc)

☐ **End** Row 114 is the lower edge. The back is about 22¼ in (56.5 cm) wide below the raglan and 24¾ in (63 cm) long. Fasten off.

Front

Yarn A, forest.

☐ **Foundation** Worked from the neck down as the back is, but it begins lower: row 1 of the front lies level with row 10 of the back. Rows 1 to 41 are the raglan. With yarn A, ch 38.

☐ **Row 1 (RS)** Sc in 2nd ch from hook and in each ch across (37 sc)

☐ **Row 2** Ch 1, turn; sc in first st, **[**ch 1, skip next st, sc in next st**] 18 times** (19 sc, 18 ch-1 sps)

☐ **Rows 3 to 4** Ch 1, turn; sc in first st, [ch 1, sc in next ch-1 sp] until every ch-1 sp is worked, ch 1,
sc in last st (21 sc; 19, 20 ch-1 sps)

3 4

☐ **Row 5** Ch 1, turn; sc in first st, sc in next ch-1 sp,
[ch 1, sc in next ch-1 sp] until every ch-1 sp is worked, sc in last st (22 sc, 19 ch-1 sps)

☐ **Rows 6 to 7** Ch 1, turn; 2 sc in first st, [ch 1, sc in next ch-1 sp] until every ch-1 sp is worked,
ch 1, 2 sc in last st (24 sc; 20, 21 ch-1 sps)

6 7

☐ **Rows 8 to 10** Ch 1, turn; sc in first st, [ch 1, sc in next ch-1 sp] until every ch-1 sp is worked, ch 1,
sc in last st (25 sc; 22, 24 ch-1 sps)

8 9 10

For your own crochet, gifts and handmade pieces you sell. Do not resell or share this PDF or copies of it.

☐ **Rows 11 to 40** — Repeat Rows 5 to 10,
5 more times (29, 33, 37, 41, 45 sc; 28, 32, 36, 40, 44 ch-1 sps at the ends of the repeats)
(45 sc; 28, 44 ch-1 sps)

11 12 13 14 15 16 17 18 19 20 21 22 23 24 25 26 27 28 29 30 31 32 33 34 35 36 37 38 39 40

☐ **Row 41** — Ch 1, turn; sc in first st, sc in next ch-1 sp,
[ch 1, sc in next ch-1 sp] until every ch-1 sp is worked, sc in last st (46 sc, 43 ch-1 sps)

☐ **Row 42** — Ch 1, turn; sc in first st, [ch 1, sc in next ch-1 sp] until every ch-1 sp is worked, ch 1,
sc in last st (45 sc, 44 ch-1 sps)

☐ **Rows 43 to 104** — Repeat Rows 41 and 42, 31 more times (45 sc, 44 ch-1 sps)

43 44 45 46 47 48 49 50 51 52 53 54 55 56 57 58 59 60 61 62 63 64 65 66 67 68 69 70 71 72 73 74 75 76 77 78 79 80 81 82 83 84 85 86 87 88 89 90 91 92 93 94 95 96 97 98 99 100 101 102 103 104

☐ **Row 105** — Ch 1, turn; **[**sc in next st, sc in next ch-1 sp**] 44 times**, sc in next st (89 sc)

☐ **End** — Row 105 is the lower edge. The front is about 22¼ in (56.5 cm) wide below the raglan and 22¾ in (58 cm) long. Fasten off.

Sleeve: make 2

Yarn B, oat.

☐ **Foundation** — Worked from the neck down in single crochet. Rows 1 to 50 are the raglan. With yarn B, ch 7.

☐ **Row 1 (RS)** — Sc in 2nd ch from hook and in each ch across (6 sc)

☐ **Rows 2 to 3** — Ch 1, turn; 2 sc in first st, sc in each st across to last st, 2 sc in last st (10 sc)

2 3

☐ **Row 4** — Ch 1, turn; sc in each st across (10 sc)

☐ **Rows 5 to 43** — Repeat Rows 2 to 4,
13 more times (14, 18, 22, 26, 30, 34, 38, 42, 46, 50, 54, 58, 62 sc at the ends of the repeats)
(62 sc)

5 6 7 8 9 10 11 12 13 14 15 16 17 18 19 20 21 22 23 24 25 26 27 28 29 30 31 32 33 34 35 36 37 38 39 40 41 42 43

☐ **Row 44** — Ch 1, turn; 2 sc in first st, sc in each st across to last st, 2 sc in last st (64 sc)

☐ **Rows 45 to 53** — Ch 1, turn; sc in each st across (64 sc)

45 46 47 48 49 50 51 52 53

☐ **Row 54** — Ch 1, turn; sc2tog, sc in each st across to last 2 sts, sc2tog (62 sc)

☐ **Rows 55 to 120** — Repeat Rows 49 to 54,
11 more times (60, 58, 56, 54, 52, 50, 48, 46, 44, 42, 40 sc at the ends of the repeats)
(40 sc)

55 56 57 58 59 60 61 62 63 64 65 66 67 68 69 70 71 72 73 74 75 76 77 78 79 80 81 82 83 84 85 86 87 88 89 90 91 92 93 94 95 96 97 98 99 100 101 102 103 104 105 106 107 108 109 110 111 112 113 114 115 116 117 118 119 120

For your own crochet, gifts and handmade pieces you sell. Do not resell or share this PDF or copies of it.

☐ **Rows 121 to 125**	Ch 1, turn; sc in each st across	(40 sc)

121 122 123 124 125

☐ **End**	Row 125 is the lower edge. The sleeve is about 16 in (40.5 cm) wide at row 50, its widest. Fasten off.

Pocket

Yarn A, forest.

☐ **Foundation**	Work this at step 2 of Assembly. Hold the front with the right side facing and row 105, its lower edge, uppermost. Skip the first 24 sts of row 105 at the right-hand end and join yarn A in the front loop (the loop nearer you) of the next st; ch 1, sc in front loop only of that st and of each of the next 39 sts (40 sc; the last 25 sts are left). This is row 1.	
☐ **Rows 2 to 8**	Ch 1, turn; sc in each st across	(40 sc)

2 3 4 5 6 7 8

☐ **Row 9**	Ch 1, turn; sc2tog, sc in each st across to last 2 sts, sc2tog	(38 sc)
☐ **Rows 10 to 30**	Repeat Rows 7 to 9, 7 more times (36, 34, 32, 30, 28, 26, 24 sc at the ends of the repeats)	(24 sc)

10 11 12 13 14 15 16 17 18 19 20 21 22 23 24 25 26 27 28 29 30

☐ **Rows 31 to 34**	Ch 1, turn; sc in each st across	(24 sc)

31 32 33 34

☐ **End**	The back loops of the 40 sts of row 105 stay free for the hem. The pocket is about 10 in (25.5 cm) wide at the fold and 6 in (15 cm) at its last row, and 7¼ in (18.5 cm) high. It is folded up on the right side of the front, so that the even-numbered rows are its outside. The slanted edges, rows 9 to 30, are the openings for the hands. Fasten off.

Pocket edging, left side

Yarn B, oat.

☐ **Foundation**	Work this at step 2 of Assembly. The side is named as worn. Fold the pocket up on the front, so that its even-numbered rows face you, and lift this edge. With the outside of the pocket facing, join yarn B in the end of row 9 of the pocket, at the lower end of the left slanted edge; ch 1, then work this edge: along rows 9 to 30 of the pocket, sc in the end of each of the next 10 rows, skip the end of the next row, sc in the end of each of the next 11 rows (21 sc). There are 21 sc in all. This is row 1.	
☐ **Row 2**	Ch 1, turn; sc in each st across	(21 sc)
☐ **End**	Fasten off.	

For your own crochet, gifts and handmade pieces you sell. Do not resell or share this PDF or copies of it.

Pocket edging, right side

Yarn B, oat.

☐ **Foundation**	Work this at step 2 of Assembly. The side is named as worn. Fold the pocket up on the front, so that its even-numbered rows face you, and lift this edge. With the outside of the pocket facing, join yarn B in the end of row 30 of the pocket, at the upper end of the right slanted edge; ch 1, then work this edge: along rows 9 to 30 of the pocket, met from the last of them, sc in the end of each of the next 11 rows, skip the end of the next row, sc in the end of each of the next 10 rows (21 sc). There are 21 sc in all. This is row 1.	
☐ **Row 2**	Ch 1, turn; sc in each st across	(21 sc)
☐ **End**	Fasten off.	

Hood

Yarn A, forest.

☐ **Foundation**	With yarn A, ch 108.	
☐ **Row 1 (RS)**	Sc in 2nd ch from hook and in each ch across	(107 sc)
☐ **Rows 2 to 50**	Ch 1, turn; sc in each st across	(107 sc)

2 3 4 5 6 7 8 9 10 11 12 13 14 15 16 17 18 19 20 21 22 23 24 25 26 27 28 29
30 31 32 33 34 35 36 37 38 39 40 41 42 43 44 45 46 47 48 49 50

☐ **Row 51**	Ch 1, turn; sc in next 51 sts, sc2tog, sc in next st, sc2tog, sc in each st across	(105 sc)
☐ **Row 52**	Ch 1, turn; sc in next 50 sts, sc2tog, sc in next st, sc2tog, sc in each st across	(103 sc)
☐ **Row 53**	Ch 1, turn; sc in next 49 sts, sc2tog, sc in next st, sc2tog, sc in each st across	(101 sc)
☐ **Row 54**	Ch 1, turn; sc in next 48 sts, sc2tog, sc in next st, sc2tog, sc in each st across	(99 sc)
☐ **Row 55**	Ch 1, turn; sc in next 47 sts, sc2tog, sc in next st, sc2tog, sc in each st across	(97 sc)
☐ **Row 56**	Ch 1, turn; sc in next 46 sts, sc2tog, sc in next st, sc2tog, sc in each st across	(95 sc)
☐ **Row 57**	Ch 1, turn; sc in next 45 sts, sc2tog, sc in next st, sc2tog, sc in each st across	(93 sc)
☐ **Row 58**	Ch 1, turn; sc in next 44 sts, sc2tog, sc in next st, sc2tog, sc in each st across	(91 sc)
☐ **Row 59**	Ch 1, turn; sc in next 43 sts, sc2tog, sc in next st, sc2tog, sc in each st across	(89 sc)
☐ **Row 60**	Ch 1, turn; sc in next 42 sts, sc2tog, sc in next st, sc2tog, sc in each st across	(87 sc)
☐ **Row 61**	Ch 1, turn; sc in next 41 sts, sc2tog, sc in next st, sc2tog, sc in each st across	(85 sc)
☐ **Row 62**	Ch 1, turn; sc in next 40 sts, sc2tog, sc in next st, sc2tog, sc in each st across	(83 sc)
☐ **End**	The hood is about 26¾ in (68 cm) wide at its lower edge and 13½ in (34.5 cm) high. The decreases at the middle of the last 12 rows round off the back. Fasten off.	

For your own crochet, gifts and handmade pieces you sell. Do not resell or share this PDF or copies of it.

Hood edging

Yarn B, oat.

☐ **Foundation**	Work this at step 4 of Assembly. With the right side facing, join yarn B in the end of row 1 of the hood, at the lower end of the right side of the face, as worn; ch 1, then work these edges in order: up the right side, along rows 1 to 62 of the hood, sc in the end of each of the next 6 rows, [skip the end of the next row, sc in the end of each of the next 6 rows] 7 times, skip the end of the next row, sc in the end of each of the next 6 rows (54 sc); down the left side, along rows 1 to 62 of the hood, met from the last of them, sc in the end of each of the next 6 rows, [skip the end of the next row, sc in the end of each of the next 6 rows] 7 times, skip the end of the next row, sc in the end of each of the next 6 rows (54 sc). There are 108 sc in all. This is row 1, a right side row.	
☐ **Rows 2 to 3** 2 3	Ch 1, turn; sc in each st across	(108 sc)
☐ **End**	Fasten off.	

Hem rib

Yarn A, forest.

☐ **Foundation**	Work this at step 6 of Assembly. Turn the hoodie upside down, with the right side facing and the lower edge uppermost. Join yarn A in the first st of row 105 of the front after the right side seam, as worn; ch 1, sc in each of the first 24 sts of row 105 of the front, sc in the back loop of each of the 40 sts that the pocket is worked into, sc in each of the last 25 sts of the front and in each of the 89 sts of row 114 of the back (178 sc); join with sl st in first sc. This is rnd 1.	
☐ **Rnd 2**	Ch 2; dc in each st around; join with sl st in first dc	(178 dc)
☐ **Rnds 3 to 6** 3 4 5 6	Ch 2; **[**fpdc around next st, bpdc around next st**] 89 times**; join with sl st in first fpdc	(89 fpdcs, 89 bpdcs)
☐ **End**	The hem rib is about 2¼ in (5.5 cm) deep. Fasten off.	

Cuff rib: make 2

Yarn A, forest.

☐ **Foundation**	Work these at step 7 of Assembly. With the right side facing and the lower edge of a sleeve uppermost, join yarn A in the first st of row 125 after the sleeve seam; ch 1, sc in each of the 40 sts around (40 sc); join with sl st in first sc. This is rnd 1.	
☐ **Rnd 2**	Ch 2; dc in each st around; join with sl st in first dc	(40 dc)
☐ **Rnds 3 to 7** 3 4 5 6 7	Ch 2; **[**fpdc around next st, bpdc around next st**] 20 times**; join with sl st in first fpdc	(20 fpdcs, 20 bpdcs)
☐ **End**	The cuff rib is about 2¾ in (7 cm) deep. Fasten off.	

For your own crochet, gifts and handmade pieces you sell. Do not resell or share this PDF or copies of it.

Assembly

1. Raglan seams: with right sides together and yarn B, sew one raglan edge of each sleeve, its back edge, to a raglan edge of the back, the ends of rows 1 to 50 of the sleeve to the ends of rows 1 to 50 of the back, row to row. Sew the other raglan edge of each sleeve, its front edge, to a raglan edge of the front in the same direction, from the neck down: the ends of rows 10 to 50 of the sleeve to the ends of rows 1 to 41 of the front. The ends of rows 1 to 9 of the front edge of each sleeve stay open: they are part of the neck.

2. Pocket: work the pocket, then the pocket edging of the left side and the pocket edging of the right side now, as written above. Lay the front flat, right side up, with the neck at the top, and fold the pocket up on it, so that it runs straight up from the fold. Its last row, 24 sts, lies along row 72 of the front, with 32 places of that row free at your left and 33 at your right (every sc and every ch-1 sp is one place). First, with a new length of yarn A of about 26 in (66 cm), sew the ends of rows 31 to 34 at one side, the 24 sts of row 34, one to each place, and the ends of rows 34 to 31 at the other side. Then sew the ends of rows 1 to 8 at each side, with another length of yarn A of about 10 in (25 cm) for each side. The slanted edges between, rows 9 to 30, stay open; at both ends of each opening sew the 2 row ends of the pocket edging to the front too and go over that place twice.

3. Side and sleeve seams: fold the hoodie with right sides together. On each side sew the ends of rows 51 to 125 of the sleeve together with yarn B, and go on down the side with yarn A: the ends of rows 42 to 105 of the front to the ends of rows 51 to 114 of the back, row to row. Turn it right side out.

4. Hood: fold the hood in half with right sides together and sew the first 41 sts of row 62 to the last 41 sts, st to st and with yarn A, for the top; the middle st lies in the fold. Turn it right side out and work the hood edging now, as written above.

5. Hood to the neck: the foundation chain of the hood (107 chs; the ch skipped at the start of row 1 is not one of them) is sewn to the neck edge with whip stitch and yarn A, both right side out, edge to edge. Begin at the right side of the face, as worn. Counted from the right raglan seam of the front, the 37 chs of the foundation chain of the front are chs 1 to 37. Sew the first 24 chs of the hood to chs 24 to 1 of the front, in that order, so that the right side of the face reaches past the middle; the next 11 chs to the ends of rows 9 to 1 of the right sleeve, 2 chs to the end of each of rows 6 and 3, 1 ch to the end of each other row; the next 6 chs to the 6 chs of the right sleeve; the next 25 chs to the 25 chs of the back; the next 6 chs to the 6 chs of the left sleeve; the next 11 chs to the ends of rows 1 to 9 of the left sleeve, 2 chs to the end of each of rows 3 and 6, 1 ch to the end of each other row; and the last 24 chs to chs 37 to 14 of the front, over the first end of the hood. At the two ends sew the 3 rows of the hood edging down too, on the line of the neck. The left side now lies over the right side by about 4 in (10 cm), with the edgings. Sew the end that lies outside down to the one under it along the neck line, so that the lap does not gape.

6. Hem rib: work it now, as written above.

7. Cuff rib: work one at the end of each sleeve now, as written above.

Finishing

- Weave in all the ends. Wash as the yarn label says and lay flat to the measurements to dry.

In all: 2 pieces.

Found a mistake in this pattern? Tell us at flossfield.com, under Make a request.

For your own crochet, gifts and handmade pieces you sell. Do not resell or share this PDF or copies of it.