Men's zip up hoodie with pockets

M, to fit chest 39 in (99 cm) · US terms



Finished size

About 44¾ in (113.5 cm) at the chest and about 27 in (68.5 cm) long

To fit a chest of 39 in (99 cm)

Skill

Intermediate

Flat pieces, a shaped hood, picked-up edges, a zipper sewn in by hand

Yarn

Medium (4), 2 colors

Hook

5.5 mm (US I-9)

Gauge

13 stitches and 11 rows to 4 in (10 cm)

In half double crochet (UK half treble).

What you need

Yarn A: slate, main color **about 1,950 yd (1,783 m), an estimate**

Yarn B: charcoal, contrast **about 175 yd (160 m), an estimate**

By weight: about 1,050 g in all, an estimate, where 100 g is 200 yd (183 m).

Hook: 5.5 mm (US I-9), or the size that gives you the gauge. Also: yarn needle, scissors, tape measure, stitch markers, pins, a separating zipper (for its length see the size list and step 9 of the finishing) and sewing thread and a sewing needle.

To find how many balls: divide by the length on your yarn's label and round up. Buy them from one dye lot. The estimate is from the stitches of this size at this gauge.

Sizes

Size	To fit chest	Yarn, an estimate	Chest (zipped)	Length, with the hem rib	Armhole depth	Sleeve, with the cuff rib	Upper sleeve	Cuff around	Back neck	Hood height	Front edge, for the zipper
S	35 in (89 cm)	about 2,040 yd (1,865 m)	41 in (104 cm)	27 in (68.5 cm)	9½ in (24 cm)	17¼ in (44 cm)	19 in (48.5 cm)	8½ in (21.5 cm)	8 in (20.5 cm)	13 in (33 cm)	23½ in (59.5 cm)
M (this file)	**39 in (99 cm)**	**about 2,125 yd (1,943 m)**	**44¾ in (113.5 cm)**	**27 in (68.5 cm)**	**9¾ in (25 cm)**	**17¼ in (44 cm)**	**19¾ in (50 cm)**	**9¼ in (23.5 cm)**	**8 in (20.5 cm)**	**13 in (33 cm)**	**23½ in (59.5 cm)**
L	43 in (109 cm)	about 2,335 yd (2,135 m)	49 in (124.5 cm)	27¾ in (70.5 cm)	10½ in (26.5 cm)	18 in (45.5 cm)	21 in (53.5 cm)	9¼ in (23.5 cm)	8 in (20.5 cm)	13 in (33 cm)	24¼ in (61.5 cm)
XL	47 in (119.5 cm)	about 2,520 yd (2,304 m)	52¾ in (134 cm)	28½ in (72.5 cm)	11 in (28 cm)	18 in (45.5 cm)	22¼ in (56.5 cm)	9¾ in (25 cm)	8½ in (21.5 cm)	13 in (33 cm)	25 in (63.5 cm)

For your own crochet, gifts and handmade pieces you sell. Do not resell or share this PDF or copies of it.

2X	51 in (129.5 cm)	about 2,625 yd (2,400 m)	57 in (145 cm)	28½ in (72.5 cm)	11½ in (29 cm)	18 in (45.5 cm)	22¾ in (58 cm)	9¾ in (25 cm)	8½ in (21.5 cm)	13 in (33 cm)	25 in (63.5 cm)
3X	55 in (139.5 cm)	about 2,825 yd (2,583 m)	60¾ in (154.5 cm)	29¼ in (74.5 cm)	12 in (30.5 cm)	17¾ in (45 cm)	24 in (61 cm)	9¾ in (25 cm)	9¼ in (23.5 cm)	13 in (33 cm)	25¾ in (65.5 cm)
4X	59 in (150 cm)	about 3,000 yd (2,743 m)	65 in (165 cm)	30 in (76 cm)	12½ in (32 cm)	17¼ in (44 cm)	25¼ in (64 cm)	10¼ in (26 cm)	9¼ in (23.5 cm)	13 in (33 cm)	26¼ in (66.5 cm)

Schematic

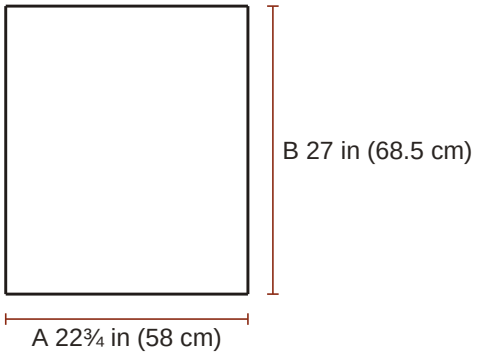

Back
A the width
B the length

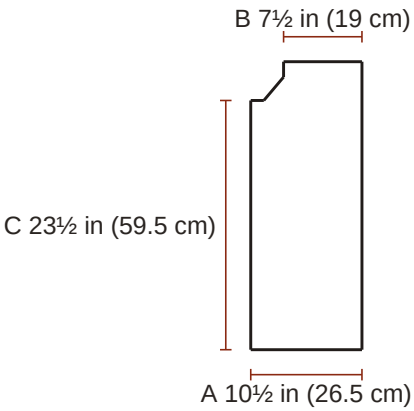

Left front
A the whole width
B across the top
C the front edge, for the zipper

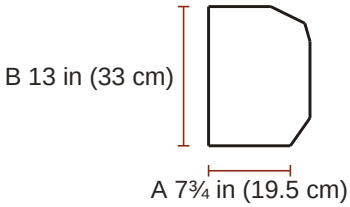

Hood side (make 2)
A across the bottom
B the hood height

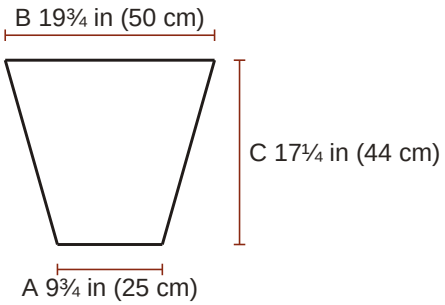

Sleeve (make 2)
A half the cuff
B the top of the sleeve, opened flat
C the sleeve

Gauge

13 stitches and 11 rows to 4 in (10 cm) in half double crochet.

For your own crochet, gifts and handmade pieces you sell. Do not resell or share this PDF or copies of it.

> **The swatch.** A test piece to measure and pull out. It is not the start of the pattern. Ch 21; begin in the 2nd ch from the hook and work 16 rows of half double crochet on 20 sts, about 6¼ in (16 cm) wide and 5¾ in (14.5 cm) high, and measure 4 in (10 cm) in the middle. Use a larger hook if your swatch is small, a smaller one if it is large. Ribs: worked sideways, 14 rows and 13 sts to 4 in (10 cm), so a rib of 7 sts is about 2¼ in (5.5 cm) deep and a rib of 8 sts is about 2½ in (6.5 cm) deep. Single crochet edging and facing: 15 rows to 4 in (10 cm). Post stitch band of the pocket: 7.5 rows to 4 in (10 cm).

Notes

- The finished chest is from 5¾ in (14.5 cm) to 6 in (15 cm) wider than the body measurement, by the size. Choose by the finished measurement you like; no fit is promised beyond the measurements given.
- The turning chain (ch 1 for single and half double crochet, ch 2 for double crochet) never counts as a stitch. Work the first stitch of every row into the first stitch, at the base of the turning chain.
- Odd-numbered rows are right side rows (the second hood side is turned over, as its words say). Mark the right side of each piece with a stitch marker or a scrap of yarn.
- A decrease counts as one stitch. "Hdc2tog twice" is two decreases, one after the other.
- The ribs are worked sideways in single crochet in the back loop (UK: double crochet). The back, the fronts and the sleeves are worked up from a long edge of a rib. A rib draws in: it is a little narrower than the piece above it.
- Left and right are those of the person who wears the hoodie.
- Sew every seam with the yarn needle and yarn A, unless the step names another yarn: cut a length about three times as long as the seam.
- Color changes in rows: work the last yarn over of the last stitch of the row before with the new yarn. Cut the old yarn, leaving an end of about 6 in (15 cm), or, if it is needed again at the same edge within 6 rows and that edge is straight, carry it loosely up the edge.
- In back loop only: insert the hook under the loop of the stitch that is farther from you, and leave the nearer loop free.

Instructions

M, to fit chest 39 in (99 cm). US terms.

ch chain, **sc** single crochet (UK double crochet), **hdc** half double crochet (UK half treble), **st** stitch.

RS right side, the one that shows.

[ ] 11 times: work what is inside 11 times in all.

(8 sc): the stitches you have when the row is done. **How to read a pattern**.

Special stitches

hdc2tog (half double crochet 2 stitches together (UK half treble 2 together)): [yarn over, insert the hook in the next stitch and pull up a loop] twice (5 loops on the hook); yarn over and pull through all 5 loops.

fpdc (front post double crochet (UK front post treble)): Yarn over, insert the hook from the front to the back and to the front again around the post of the stitch named, pull up a loop, [yarn over and pull through 2 loops] twice. The front is the side that faces you. A post stitch takes the place of the stitch it is worked around: do not work into the top of that stitch as well.

bpdc (back post double crochet (UK back post treble)): As fpdc, but insert the hook from the back to the front and to the back again around the post.

For your own crochet, gifts and handmade pieces you sell. Do not resell or share this PDF or copies of it.

Back hem rib

Yarn B, charcoal.

☐ **Foundation**	With yarn B, ch 9.	
☐ **Row 1 (RS)**	Sc in 2nd ch from hook and in each ch across	(8 sc)
☐ **Rows 2 to 74**	Ch 1, turn; sc in back loop only of each st across	(8 sc)

2 3 4 5 6 7 8 9 10 11 12 13 14 15 16 17 18 19 20 21 22 23 24 25 26 27 28 29
30 31 32 33 34 35 36 37 38 39 40 41 42 43 44 45 46 47 48 49 50 51 52 53 54 55 56 57
58 59 60 61 62 63 64 65 66 67 68 69 70 71 72 73 74

☐ **End**	Fasten off.	

Front hem rib: make 2, one for each front

Yarn B, charcoal.

☐ **Foundation**	With yarn B, ch 9.	
☐ **Row 1 (RS)**	Sc in 2nd ch from hook and in each ch across	(8 sc)
☐ **Rows 2 to 34**	Ch 1, turn; sc in back loop only of each st across	(8 sc)

2 3 4 5 6 7 8 9 10 11 12 13 14 15 16 17 18 19 20 21 22 23 24 25 26 27 28 29
30 31 32 33 34

☐ **End**	Fasten off.	

Back

Yarn A, slate.

☐ **Foundation**	Hold the back hem rib with one long edge at the top. Join yarn A at the right-hand end of that edge; ch 1, sc in the end of each rib row across (74 sc). This is row 1, and a right side row.	
☐ **Rows 2 to 68**	Ch 1, turn; hdc in each st across	(74 hdc)

2 3 4 5 6 7 8 9 10 11 12 13 14 15 16 17 18 19 20 21 22 23 24 25 26 27 28 29
30 31 32 33 34 35 36 37 38 39 40 41 42 43 44 45 46 47 48 49 50 51 52 53 54 55 56 57
58 59 60 61 62 63 64 65 66 67 68

☐ **End**	The back measures about 22¾ in (58 cm) wide and 27 in (68.5 cm) long, with the rib. Row 68 is its top edge. Fasten off.	

Left front

Yarn A, slate.

☐ **Foundation**	Right side rows begin at the side edge and end at the front edge. Hold a front hem rib with one long edge at the top. Join yarn A at the right-hand end of that edge; ch 1, sc in the end of each rib row across (34 sc). This is row 1, and a right side row.	
☐ **Rows 2 to 58**	Ch 1, turn; hdc in each st across	(34 hdc)

2 3 4 5 6 7 8 9 10 11 12 13 14 15 16 17 18 19 20 21 22 23 24 25 26 27 28 29
30 31 32 33 34 35 36 37 38 39 40 41 42 43 44 45 46 47 48 49 50 51 52 53 54 55 56 57
58

☐ **Row 59**	Ch 1, turn; hdc in next 30 sts, leave the last 4 sts unworked	(30 hdc)

For your own crochet, gifts and handmade pieces you sell. Do not resell or share this PDF or copies of it.

☐ **Row 60**	Ch 1, turn; hdc2tog, hdc in each st across	(29 hdc)
☐ **Row 61**	Ch 1, turn; hdc in each st across to last 2 sts, hdc2tog	(28 hdc)
☐ **Rows 62 to 65**	Repeat Rows 60 and 61, 2 more times (26, 24 hdc at the ends of the repeats)	(24 hdc)
	62 63 64 65	
☐ **Rows 66 to 68**	Ch 1, turn; hdc in each st across	(24 hdc)
	66 67 68	
☐ **End**	The 24 sts left are the shoulder. Fasten off.	

Right front

Yarn A, slate.

☐ **Foundation**	Right side rows begin at the front edge and end at the side edge. Hold a front hem rib with one long edge at the top. Join yarn A at the right-hand end of that edge; ch 1, sc in the end of each rib row across (34 sc). This is row 1, and a right side row.	
☐ **Rows 2 to 58**	Ch 1, turn; hdc in each st across	(34 hdc)
	2 3 4 5 6 7 8 9 10 11 12 13 14 15 16 17 18 19 20 21 22 23 24 25 26 27 28 29 30 31 32 33 34 35 36 37 38 39 40 41 42 43 44 45 46 47 48 49 50 51 52 53 54 55 56 57 58	
☐ **Row 59**	Fasten off and turn. Skip the first 4 sts and join yarn A in the next st; ch 1, and beginning in that st, hdc in next 30 sts	(30 hdc)
☐ **Row 60**	Ch 1, turn; hdc in each st across to last 2 sts, hdc2tog	(29 hdc)
☐ **Row 61**	Ch 1, turn; hdc2tog, hdc in each st across	(28 hdc)
☐ **Rows 62 to 65**	Repeat Rows 60 and 61, 2 more times (26, 24 hdc at the ends of the repeats)	(24 hdc)
	62 63 64 65	
☐ **Rows 66 to 68**	Ch 1, turn; hdc in each st across	(24 hdc)
	66 67 68	
☐ **End**	The 24 sts left are the shoulder. Fasten off.	

Cuff rib: make 2

Yarn B, charcoal.

☐ **Foundation**	With yarn B, ch 8.	
☐ **Row 1 (RS)**	Sc in 2nd ch from hook and in each ch across	(7 sc)
☐ **Rows 2 to 32**	Ch 1, turn; sc in back loop only of each st across	(7 sc)
	2 3 4 5 6 7 8 9 10 11 12 13 14 15 16 17 18 19 20 21 22 23 24 25 26 27 28 29 30 31 32	
☐ **End**	Fasten off.	

For your own crochet, gifts and handmade pieces you sell. Do not resell or share this PDF or copies of it.

Sleeve: make 2

Yarn A, slate.

☐ **Foundation**	Hold a cuff rib with one long edge at the top. Join yarn A at the right-hand end of that edge; ch 1, sc in the end of each rib row across (32 sc). This is row 1, and a right side row.	
☐ **Row 2**	Ch 1, turn; hdc in each st across	(32 hdc)
☐ **Row 3**	Ch 1, turn; 2 hdc in first st, hdc in each st across to last st, 2 hdc in last st	(34 hdc)
☐ **Rows 4 to 33**	Repeat Rows 2 and 3, 15 more times (36, 38, 40, 42, 44, 46, 48, 50, 52, 54, 56, 58, 60, 62, 64 hdc at the ends of the repeats)	(64 hdc)
	4 5 6 7 8 9 10 11 12 13 14 15 16 17 18 19 20 21 22 23 24 25 26 27 28 29 30 31 32 33	
☐ **Rows 34 to 42**	Ch 1, turn; hdc in each st across	(64 hdc)
	34 35 36 37 38 39 40 41 42	
☐ **End**	The sleeve measures about 19¾ in (50 cm) across the top and 17¼ in (44 cm) long, with the rib. Fasten off.	

Hood side: make 2, alike

Yarn A, slate.

☐ **Foundation**	Both sides of the hood are worked from these words. The foundation chain is the neck edge and row 36 is the top. The straight edge, at the beginning of the odd-numbered rows, is the edge at the face; the shaped edge, at their end, is the back edge. With the odd-numbered rows on the outside the piece is the right side of the hood, as worn; turn the second piece over, so that its even-numbered rows are on the outside, and it is the left side. With yarn A, ch 26.	
☐ **Row 1 (RS)**	Hdc in 2nd ch from hook and in each ch across	(25 hdc)
☐ **Row 2**	Ch 1, turn; 2 hdc in first st, hdc in each st across	(26 hdc)
☐ **Row 3**	Ch 1, turn; hdc in each st across to last st, 2 hdc in last st	(27 hdc)
☐ **Rows 4 to 7**	Repeat Rows 2 and 3, 2 more times (29, 31 hdc at the ends of the repeats)	(31 hdc)
	4 5 6 7	
☐ **Rows 8 to 28**	Ch 1, turn; hdc in each st across	(31 hdc)
	8 9 10 11 12 13 14 15 16 17 18 19 20 21 22 23 24 25 26 27 28	
☐ **Row 29**	Ch 1, turn; hdc in each st across to last 2 sts, hdc2tog	(30 hdc)
☐ **Row 30**	Ch 1, turn; hdc2tog, hdc in each st across	(29 hdc)
☐ **Rows 31 to 32**	Repeat Rows 29 and 30, once more	(27 hdc)
	31 32	
☐ **Row 33**	Ch 1, turn; hdc in each st across to last 4 sts, hdc2tog twice	(25 hdc)
☐ **Row 34**	Ch 1, turn; hdc2tog twice, hdc in each st across	(23 hdc)

For your own crochet, gifts and handmade pieces you sell. Do not resell or share this PDF or copies of it.

☐ **Rows 35 to 36**	Repeat Rows 33 and 34, once more	(19 hdc)

35 36

☐ **End**	The piece is about 7¾ in (19.5 cm) wide at the neck edge, 9½ in (24 cm) at its widest and 13 in (33 cm) high. Fasten off.	

Hood panel

Yarn A, slate.

☐ **Foundation**	With yarn A, ch 13.	
☐ **Row 1 (RS)**	Hdc in 2nd ch from hook and in each ch across	(12 hdc)
☐ **Rows 2 to 59**	Ch 1, turn; hdc in each st across	(12 hdc)

2 3 4 5 6 7 8 9 10 11 12 13 14 15 16 17 18 19 20 21 22 23 24 25 26 27 28 29
30 31 32 33 34 35 36 37 38 39 40 41 42 43 44 45 46 47 48 49 50 51 52 53 54 55 56 57
58 59

☐ **End**	The panel is about 3¾ in (9.5 cm) wide and 21½ in (54.5 cm) long. Its foundation chain lies at the face and row 59 at the neck. Fasten off.	

Pocket: make 2

Yarn A, slate.

☐ **Foundation**	With yarn A, ch 23. Colors: rows 1 to 15 yarn A; rows 16 to 18 yarn B.	
☐ **Row 1 (RS)**	Hdc in 2nd ch from hook and in each ch across	(22 hdc)
☐ **Rows 2 to 16**	Ch 1, turn; hdc in each st across	(22 hdc)

2 3 4 5 6 7 8 9 10 11 12 13 14 15 16

☐ **Rows 17 to 18**	Ch 2, turn; **[**fpdc around next st, bpdc around next st**] 11 times**	(11 fpdcs, 11 bpdcs)

17 18

☐ **End**	The pocket is about 6¾ in (17 cm) wide and 7 in (18 cm) high. The foundation chain is its lower edge and rows 16 to 18 are its top band. Fasten off.	

For your own crochet, gifts and handmade pieces you sell. Do not resell or share this PDF or copies of it.

Front and hood edging

Yarn B, charcoal.

☐ **Foundation**	Work this at step 5 of Assembly. The fronts are named as worn. With the right side facing, join yarn B at the lower corner of the right front, in the first st of the end of its hem rib; ch 1, then work these edges in order: sc in each of the 8 sts or chs along the end of the front hem rib (8 sc); up the right front, along rows 1 to 58 of the right front, [sc in the end of each of the next 4 rows, 2 sc in the end of the next row] 10 times, sc in the end of each of the next 8 rows (68 sc); up the right side of the hood, along rows 1 to 36 of the hood side, [sc in the end of each of the next 4 rows, 2 sc in the end of the next row] 7 times, sc in the end of the next row (43 sc); over the top, sc in each of the 12 chs of the foundation chain of the hood panel, along their free side (12 sc); down the left side of the hood, along rows 1 to 36 of the hood side, met from the last of them, sc in the end of the next row, [2 sc in the end of the next row, sc in the end of each of the next 4 rows] 7 times (43 sc); down the left front, along rows 1 to 58 of the left front, met from the last of them, sc in the end of each of the next 8 rows, [2 sc in the end of the next row, sc in the end of each of the next 4 rows] 10 times (68 sc); sc in each of the 8 sts or chs along the end of the front hem rib (8 sc). There are 250 sc in all. This is row 1, a right side row.	
☐ **Row 2**	Ch 1, turn; sc in each st across	(250 sc)
☐ **End**	The first 76 sts and the last 76 sts of the edging are the two front edges, for the zipper. Fasten off.	

Zipper facing: make 2

Yarn A, slate.

☐ **Foundation**	With yarn A, ch 77.	
☐ **Row 1 (RS)**	Sc in 2nd ch from hook and in each ch across	(76 sc)
☐ **Rows 2 to 3** 2 3	Ch 1, turn; sc in each st across	(76 sc)
☐ **End**	The facing is about 23½ in (59.5 cm) long and ¾ in (1.9 cm) wide. Fasten off.	

Assembly

1. Shoulders: lay the fronts on the back with right sides together and the side edges level. Sew the 24 sts of row 68 of each front to the 24 sts at that end of row 68 of the back, st to st. The middle 26 sts of the back stay open for the neck.

2. Hood: lay the panel right side up, with its foundation chain at your left: the right side of the hood is sewn to the long edge away from you and the left side to the long edge near you. Lay the right side of the hood, its outside down, on the panel, the 19 sts of row 36 along that edge and the face edge of the side level with the foundation chain of the panel. From the face sew the 19 sts of row 36 of the side to the ends of rows 1 to 16 of the panel; then the back edge, rows 36 to 29 of the side, to rows 17 to 29 of the panel, easing the curve in; then rows 28 to 1 of the side to rows 30 to 59 of the panel. Sew the left side of the hood, its outside down, to the other long edge by the same counts. Turn the hood right side out.

3. Hood to the neck: with right sides together, pin the lower edge of the hood along the neck edge, so that each face edge is level with a front edge. From a front edge on each side sew: 4 chs of the hood side to the 4 sts left free at row 58 of the front; the next 14 chs to the 10 row ends of the neck, 7 chs to every 5 row ends; the last 7 chs to the first 7

For your own crochet, gifts and handmade pieces you sell. Do not resell or share this PDF or copies of it.

open sts of the back neck. The 12 sts of row 59 of the panel go to the 12 sts in the middle of the back neck.

4. Pockets: lay a pocket, right side up, on the right side of each front, with the 22 chs of its foundation chain along the line where the body begins above the hem rib, and with 6 sts of the front free between the pocket and the front edge. Sew on the lower edge and the two side edges, rows 1 to 18, with a new length of yarn A of about 64 in (163 cm). The top stays open; go over each upper corner twice.

5. Front and hood edging: work it now, as written above.

6. Markers: at each side edge of the back and at the side edge of each front, place a marker in the end of row 42. The 27 rows from the marker to the shoulder seam, about 9¾ in (25 cm), are half of the armhole.

7. Sleeves: with right sides together, put the middle of the top edge of a sleeve at a shoulder seam and its two ends at the markers. Sew the top edge on: 32 sts of the sleeve to the 27 row ends of the front, and the other 32 sts to the 27 row ends of the back, about 6 sts to every 5 row ends.

8. Sides and sleeves: fold the hoodie at the shoulders, right sides together. Sew each sleeve seam from the cuff edge to the underarm and go on down the side seam to the lower edge. At the two ribs the edges are the foundation chain and the last row of a rib: sew them stitch to stitch, 7 at the cuff and 8 at the hem, with yarn B. Between the ribs sew row end to row end. Turn the hoodie right side out.

9. Zipper: you need a separating zipper about as long as a front edge, 23½ in (59.5 cm) from the lower edge to the neck (its teeth, not its tape). One up to 1 in (2.5 cm) shorter will do: begin at the lower edge and leave the rest at the neck. Wash the hoodie and let it dry flat before the zipper goes in. Close the zipper and lay it, right side up, under the two front edges, so that the edges meet over the middle of the teeth and the lower end of the zipper is level with the lower edge. Pin along both tapes, each pin across the zipper, and baste with sewing thread. Open the zipper and sew each side with small backstitches of sewing thread in the color of yarn B, along the line between the two rows of the edging, through the edging and the tape. At the neck fold the end of each tape under and sew it down. Take out the basting.

10. Facings: on the inside, lay a facing over each zipper tape, with one long edge close beside the teeth, but not so close that the slider catches it, and its two ends level with the two ends of the front edge. Sew both long edges and both ends to the wrong side of the front with small slanting stitches of yarn A that do not show on the right side: the facing covers the tape.

Finishing

- Weave in all the ends. Wash as the yarn label says and lay flat to the measurements to dry.

In all: 8 pieces.

Found a mistake in this pattern? Tell us at flossfield.com, under Make a request.

For your own crochet, gifts and handmade pieces you sell. Do not resell or share this PDF or copies of it.