Round yoke sweater with color bands

Size M · US terms



Finished size

About 40½ in (103 cm) at the bust and about 22¾ in (58 cm) long

To fit a bust of 37 in (94 cm)

Skill

Easy

Basic stitches and simple shaping, in one piece from the neck down.

Yarn

Medium (4), 3 colors

Hook

5.5 mm (US I-9)

Gauge

13 stitches and 11 rounds to 4 in (10 cm)

In half double crochet.

You will need

Yarn A: oat, the main color	**about 1,200 yd (1,097 m), an estimate**
Yarn B: rust, the second color	**about 55 yd (50 m), an estimate**
Yarn C: forest, the third color	**about 40 yd (37 m), an estimate**

Hook: 5.5 mm (US I-9). Also: yarn needle, scissors and tape measure.

To find how many balls: divide by the length on your yarn's label and round up. The estimate is from the stitches of this size at this gauge.

Sizes

Size	To fit bust	Bust	Length	Yoke depth	Sleeve	Upper sleeve	Neck	Yarn, an estimate
XS	29 in (73.5 cm)	33¼ in (84.5 cm)	21¼ in (54 cm)	7¼ in (18.5 cm)	17 in (43 cm)	12¼ in (31 cm)	21 in (53.5 cm)	about 1,065 yd (975 m)
Size S	33 in (84 cm)	37 in (94 cm)	22½ in (57 cm)	8 in (20.5 cm)	17¼ in (44 cm)	12¼ in (31 cm)	21 in (53.5 cm)	about 1,160 yd (1,061 m)
Size M (this file)	**37 in (94 cm)**	**40½ in (103 cm)**	**22¾ in (58 cm)**	**8¼ in (21 cm)**	**17¼ in (44 cm)**	**13½ in (34.5 cm)**	**21 in (53.5 cm)**	**about 1,295 yd (1,184 m)**
Size L	41 in (104 cm)	45½ in (115.5 cm)	23½ in (59.5 cm)	8¾ in (22 cm)	18 in (45.5 cm)	14¼ in (36 cm)	21 in (53.5 cm)	about 1,470 yd (1,344 m)
1X	45 in (114.5 cm)	49¼ in (125 cm)	24¼ in (61.5 cm)	9½ in (24 cm)	18 in (45.5 cm)	16 in (40.5 cm)	21 in (53.5 cm)	about 1,570 yd (1,436 m)

For your own crochet, gifts and handmade pieces you sell. Do not resell or share this PDF.

2X	49 in (124.5 cm)	53 in (134.5 cm)	24½ in (62 cm)	9¾ in (25 cm)	18½ in (47 cm)	17¾ in (45 cm)	21 in (53.5 cm)	about 1,750 yd (1,601 m)
3X	53 in (134.5 cm)	56½ in (143.5 cm)	25¼ in (64 cm)	10¼ in (26 cm)	18½ in (47 cm)	19 in (48.5 cm)	21 in (53.5 cm)	about 1,855 yd (1,696 m)
4X	57 in (145 cm)	61½ in (156 cm)	26 in (66 cm)	11 in (28 cm)	19¼ in (49 cm)	21 in (53.5 cm)	21 in (53.5 cm)	about 2,080 yd (1,902 m)
5X	61 in (155 cm)	65¼ in (165.5 cm)	26¾ in (68 cm)	11¼ in (28.5 cm)	19¼ in (49 cm)	21½ in (54.5 cm)	21 in (53.5 cm)	about 2,235 yd (2,043 m)

Schematic

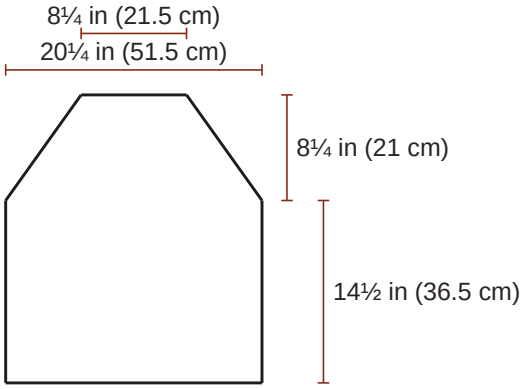

Body, laid flat

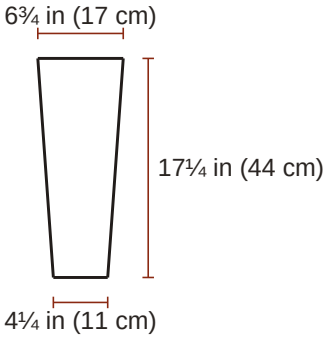

Sleeve, laid flat

Abbreviations

Written in US terms. Where the UK name differs it is given beside the US one.

ch chain
sl st slip stitch (UK ss, slip stitch)
sc single crochet (UK dc, double crochet)
hdc half double crochet (UK htr, half treble)
st stitch
rnd round

Special stitches

hdc2tog (half double crochet 2 stitches together (UK half treble 2 together)): [Yarn over, insert the hook in the next stitch and pull up a loop] twice (5 loops on the hook); yarn over and pull through all 5 loops. It leaves 1 hdc2tog for the next row.

fpdc (front post double crochet (UK front post treble)): Yarn over, insert the hook from the front to the back and to the front again around the post of the stitch named, pull up a loop, [yarn over and pull through 2 loops] twice. The front is the side that faces you. A post stitch takes the place of the stitch it is worked around: do not work into the top of that stitch as well. It leaves 1 fpdc for the next row.

bpdc (back post double crochet (UK back post treble)): As fpdc, but insert the hook from the back to the front and to the back again around the post. It leaves 1 bpdc for the next row.

For your own crochet, gifts and handmade pieces you sell. Do not resell or share this PDF.

Gauge

13 stitches and 11 rounds to 4 in (10 cm) in half double crochet.

> **The swatch.** A test piece to measure and pull out. It is not the start of the pattern. Ch 21; begin in the 2nd ch from the hook and work 16 rows of half double crochet on 20 sts, about 6¼ in (16 cm) wide and 5¾ in (14.5 cm) high, and measure 4 in (10 cm) in the middle. Use a larger hook if your swatch is small, a smaller one if it is large.

Before you start

- Women's sizes.
- The finished bust is from 3½ in (9 cm) to 4½ in (11.5 cm) wider than the body measurement, by the size. Choose by the finished measurement you like; no fit is promised beyond the measurements given.
- Worked from the neck down in one piece. The rounds are not turned; the right side always faces you.
- The rounds begin at the middle of the back, so the first and the last section of each round are the two halves of the back.
- Work the foundation chain and the neckband loosely: the neck has no opening and must go over the head.
- The chain at the start of a round or row (ch 1 for single and half double crochet, ch 2 for double crochet) never counts as a stitch. Work the first stitch into the stitch at its base.
- A decrease counts as one stitch.
- At the underarms, work into each of the new chains as into a stitch on the next round. The sleeves are worked into the free side of these chains.
- For the rib, always work around the post (the upright part) of the stitch below, not into its top.
- Color changes in rounds: work the sl st that joins the round before with the new yarn. Cut the old yarn, leaving an end of about 6 in (15 cm), or, if it is needed again within 6 rnds, carry it loosely up the inside at the join.

Instructions

Chosen: Size M. Square brackets [ ] hold a repeat: work what is inside as many times as it says. The count in round brackets at the end of a line is what that line leaves. Tick the box when a round is done. In UK terms sl st is slip stitch, sc is double crochet and hdc is half treble.

Yoke

Yarns in order of use: A, oat; B, rust; C, forest.

Colors: rnds 1 and 2 yarn A; rnd 3 yarn B; rnd 4 yarn A; rnds 5 and 6 yarn C; rnd 7 yarn A; rnds 8 and 9 yarn B; rnd 10 yarn A; rnd 11 yarn C; rnd 12 yarn A; rnd 13 yarn B; rnds 14 to 23 yarn A.

☐ **Foundation**	With yarn A, ch 68; join with sl st in first ch to form a ring, taking care not to twist the chain.	
☐ **Rnd 1**	Ch 1; hdc in each ch around; join with sl st in first hdc	**(68 hdc)**
☐ **Rnd 2**	Ch 1; [hdc in next 5 sts, 2 hdc in next st] twice, **[**hdc in next 6 sts, 2 hdc in next st**] 8 times**; join with sl st in first hdc	**(78 hdc)**
☐ **Rnd 3**	**Yarn B.** Ch 1; hdc in next 4 sts, [2 hdc in next st, hdc in next 6 sts] twice, **[**2 hdc in next st, hdc in next 7 sts**] 7 times**, 2 hdc in next st, hdc in next 3 sts; join with sl st in first hdc	**(88 hdc)**
☐ **Rnd 4**	**Yarn A.** Ch 1; hdc in each st around; join with sl st in first hdc	**(88 hdc)**

For your own crochet, gifts and handmade pieces you sell. Do not resell or share this PDF.

☐ **Rnd 5**	**Yarn C.** Ch 1; hdc in next 2 sts, [2 hdc in next st, hdc in next 7 sts] twice, **[**2 hdc in next st, hdc in next 8 sts**] 7 times**, 2 hdc in next st, hdc in next 6 sts; join with sl st in first hdc	**(98 hdc)**
☐ **Rnd 6**	Ch 1; hdc in next 7 sts, [2 hdc in next st, hdc in next 8 sts] twice, **[**2 hdc in next st, hdc in next 9 sts**] 7 times**, 2 hdc in next st, hdc in next 2 sts; join with sl st in first hdc	**(108 hdc)**
☐ **Rnd 7**	**Yarn A.** Ch 1; hdc in each st around; join with sl st in first hdc	**(108 hdc)**
☐ **Rnd 8**	**Yarn B.** Ch 1; [hdc in next 9 sts, 2 hdc in next st] twice, **[**hdc in next 10 sts, 2 hdc in next st**] 8 times**; join with sl st in first hdc	**(118 hdc)**
☐ **Rnd 9**	Ch 1; hdc in each st around; join with sl st in first hdc	**(118 hdc)**
☐ **Rnd 10**	**Yarn A.** Ch 1; hdc in next 6 sts, [2 hdc in next st, hdc in next 10 sts] twice, **[**2 hdc in next st, hdc in next 11 sts**] 7 times**, 2 hdc in next st, hdc in next 5 sts; join with sl st in first hdc	**(128 hdc)**
☐ **Rnd 11**	**Yarn C.** Ch 1; hdc in next 4 sts, **[**2 hdc in next st, hdc in next 15 sts**] 7 times**, 2 hdc in next st, hdc in next 11 sts; join with sl st in first hdc	**(136 hdc)**
☐ **Rnd 12**	**Yarn A.** Ch 1; hdc in each st around; join with sl st in first hdc	**(136 hdc)**
☐ **Rnd 13**	**Yarn B.** Ch 1; hdc in next 10 sts, **[**2 hdc in next st, hdc in next 12 sts**] 4 times**, **[**2 hdc in next st, hdc in next 13 sts**] 5 times**, 2 hdc in next st, hdc in next 3 sts; join with sl st in first hdc	**(146 hdc)**
☐ **Rnd 14**	**Yarn A.** Ch 1; **[**hdc in next 13 sts, 2 hdc in next st**] 4 times**, **[**hdc in next 14 sts, 2 hdc in next st**] 6 times**; join with sl st in first hdc	**(156 hdc)**
☐ **Rnd 15**	Ch 1; hdc in each st around; join with sl st in first hdc	**(156 hdc)**
☐ **Rnd 16**	Ch 1; hdc in next 8 sts, **[**2 hdc in next st, hdc in next 14 sts**] 4 times**, **[**2 hdc in next st, hdc in next 15 sts**] 5 times**, 2 hdc in next st, hdc in next 7 sts; join with sl st in first hdc	**(166 hdc)**
☐ **Rnd 17**	Ch 1; hdc in each st around; join with sl st in first hdc	**(166 hdc)**
☐ **Rnd 18**	Ch 1; hdc in next 4 sts, **[**2 hdc in next st, hdc in next 15 sts**] 4 times**, **[**2 hdc in next st, hdc in next 16 sts**] 5 times**, 2 hdc in next st, hdc in next 12 sts; join with sl st in first hdc	**(176 hdc)**
☐ **Rnd 19**	Ch 1; hdc in next 13 sts, **[**2 hdc in next st, hdc in next 16 sts**] 4 times**, **[**2 hdc in next st, hdc in next 17 sts**] 5 times**, 2 hdc in next st, hdc in next 4 sts; join with sl st in first hdc	**(186 hdc)**
☐ **Rnd 20**	Ch 1; hdc in each st around; join with sl st in first hdc	**(186 hdc)**
☐ **Rnd 21**	Ch 1; **[**hdc in next 17 sts, 2 hdc in next st**] 4 times**, **[**hdc in next 18 sts, 2 hdc in next st**] 6 times**; join with sl st in first hdc	**(196 hdc)**
☐ **Rnds 22 to 23**	Ch 1; hdc in each st around; join with sl st in first hdc	**(196 hdc)**

A box for each round, 22 to 23: tick them off as you go.

22 23

☐ **End**	Do not fasten off.

For your own crochet, gifts and handmade pieces you sell. Do not resell or share this PDF.

Body

Yarn A, oat.

☐ **Foundation**	Go on from rnd 23 of the yoke.	
☐ **Rnd 24**	Ch 1; hdc in next 30 sts, ch 6 (underarm), skip next 38 sts (one sleeve), hdc in next 60 sts, ch 6 (underarm), skip next 38 sts (one sleeve), hdc in next 30 sts; join with sl st in first hdc	**(120 hdc, 12 ch)**
☐ **Rnds 25 to 58**	Ch 1; hdc in each st around; join with sl st in first hdc	**(132 hdc)**

A box for each round, 25 to 58: tick them off as you go.

25 26 27 28 29 30 31 32 33 34 35 36 37 38 39 40 41 42 43 44 45 46 47 48 49 50 51 52 53 54 55 56 57 58

☐ **Rnds 59 to 61**	Ch 2; **[**fpdc around next st, bpdc around next st**] 66 times**; join with sl st in first fpdc	**(66 fpdcs, 66 bpdcs)**

A box for each round, 59 to 61: tick them off as you go.

59 60 61

☐ **End**	Fasten off.	

Sleeve: make 2

Yarn A, oat.

☐ **Foundation**	With the right side facing, join yarn A in the left one of the two middle chs of an underarm.	
☐ **Rnd 1**	Ch 1, hdc in that ch and in each of the next 2 underarm chs, hdc in each of the 38 sleeve sts and hdc in each of the 3 underarm chs left; join with sl st in first hdc	**(44 hdc)**
☐ **Rnd 2**	Ch 1; hdc in each st around; join with sl st in first hdc	**(44 hdc)**
☐ **Rnd 3**	Ch 1; hdc2tog, hdc in each st around to last 2 sts, hdc2tog; join with sl st in first hdc2tog	**(42 hdc)**
☐ **Rnds 4 to 7**	Ch 1; hdc in each st around; join with sl st in first hdc	**(42 hdc)**

A box for each round, 4 to 7: tick them off as you go.

4 5 6 7

☐ **Rnd 8**	Ch 1; hdc2tog, hdc in each st around to last 2 sts, hdc2tog; join with sl st in first hdc2tog	**(40 hdc)**
☐ **Rnd 9**	Ch 1; hdc in each st around; join with sl st in first hdc	**(40 hdc)**
☐ **Rnd 10**	Ch 1; hdc in each st around; join with sl st in first hdc	**(40 hdc)**
☐ **Rnd 11**	Ch 1; hdc in each st around; join with sl st in first hdc	**(40 hdc)**
☐ **Rnd 12**	Ch 1; hdc in each st around; join with sl st in first hdc	**(40 hdc)**
☐ **Rnd 13**	Ch 1; hdc2tog, hdc in each st around to last 2 sts, hdc2tog; join with sl st in first hdc2tog	**(38 hdc)**
☐ **Rnd 14**	Ch 1; hdc in each st around; join with sl st in first hdc	**(38 hdc)**
☐ **Rnd 15**	Ch 1; hdc in each st around; join with sl st in first hdc	**(38 hdc)**

For your own crochet, gifts and handmade pieces you sell. Do not resell or share this PDF.

☐ **Rnd 16**	Ch 1; hdc in each st around; join with sl st in first hdc	**(38 hdc)**
☐ **Rnd 17**	Ch 1; hdc in each st around; join with sl st in first hdc	**(38 hdc)**
☐ **Rnd 18**	Ch 1; hdc2tog, hdc in each st around to last 2 sts, hdc2tog; join with sl st in first hdc2tog	**(36 hdc)**
☐ **Rnd 19**	Ch 1; hdc in each st around; join with sl st in first hdc	**(36 hdc)**
☐ **Rnd 20**	Ch 1; hdc in each st around; join with sl st in first hdc	**(36 hdc)**
☐ **Rnd 21**	Ch 1; hdc in each st around; join with sl st in first hdc	**(36 hdc)**
☐ **Rnd 22**	Ch 1; hdc in each st around; join with sl st in first hdc	**(36 hdc)**
☐ **Rnd 23**	Ch 1; hdc2tog, hdc in each st around to last 2 sts, hdc2tog; join with sl st in first hdc2tog	**(34 hdc)**
☐ **Rnd 24**	Ch 1; hdc in each st around; join with sl st in first hdc	**(34 hdc)**
☐ **Rnd 25**	Ch 1; hdc in each st around; join with sl st in first hdc	**(34 hdc)**
☐ **Rnd 26**	Ch 1; hdc in each st around; join with sl st in first hdc	**(34 hdc)**
☐ **Rnd 27**	Ch 1; hdc in each st around; join with sl st in first hdc	**(34 hdc)**
☐ **Rnd 28**	Ch 1; hdc2tog, hdc in each st around to last 2 sts, hdc2tog; join with sl st in first hdc2tog	**(32 hdc)**
☐ **Rnd 29**	Ch 1; hdc in each st around; join with sl st in first hdc	**(32 hdc)**
☐ **Rnd 30**	Ch 1; hdc in each st around; join with sl st in first hdc	**(32 hdc)**
☐ **Rnd 31**	Ch 1; hdc in each st around; join with sl st in first hdc	**(32 hdc)**
☐ **Rnd 32**	Ch 1; hdc in each st around; join with sl st in first hdc	**(32 hdc)**
☐ **Rnd 33**	Ch 1; hdc2tog, hdc in each st around to last 2 sts, hdc2tog; join with sl st in first hdc2tog	**(30 hdc)**
☐ **Rnd 34**	Ch 1; hdc in each st around; join with sl st in first hdc	**(30 hdc)**
☐ **Rnd 35**	Ch 1; hdc in each st around; join with sl st in first hdc	**(30 hdc)**
☐ **Rnd 36**	Ch 1; hdc in each st around; join with sl st in first hdc	**(30 hdc)**
☐ **Rnd 37**	Ch 1; hdc in each st around; join with sl st in first hdc	**(30 hdc)**
☐ **Rnd 38**	Ch 1; hdc2tog, hdc in each st around to last 2 sts, hdc2tog; join with sl st in first hdc2tog	**(28 hdc)**
☐ **Rnd 39**	Ch 1; hdc in each st around; join with sl st in first hdc	**(28 hdc)**
☐ **Rnd 40**	Ch 1; hdc in each st around; join with sl st in first hdc	**(28 hdc)**
☐ **Rnd 41**	Ch 1; hdc in each st around; join with sl st in first hdc	**(28 hdc)**
☐ **Rnd 42**	Ch 1; hdc in each st around; join with sl st in first hdc	**(28 hdc)**
☐ **Rnd 43**	Ch 1; hdc in each st around; join with sl st in first hdc	**(28 hdc)**

For your own crochet, gifts and handmade pieces you sell. Do not resell or share this PDF.

☐ **Rnds 44 to 46**	Ch 2; **[**fpdc around next st, bpdc around next st**] 14 times**; join with sl st in first fpdc	**(14 fpdcs, 14 bpdcs)**

A box for each round, 44 to 46: tick them off as you go.

44 45 46

☐ **End**	Fasten off.	

Neckband

Yarn A, oat.

☐ **Foundation**	With the right side facing, join yarn A in the foundation chain at the middle of the back.	
☐ **Rnd 1**	Ch 1, sc in each ch around; join with sl st in first sc	**(68 sc)**
☐ **Rnds 2 to 3**	Ch 1; sc in each st around; join with sl st in first sc	**(68 sc)**

A box for each round, 2 to 3: tick them off as you go.

2 3

☐ **End**	Fasten off.	

Putting it together

Close any small gaps at the underarms with the yarn ends there.

Finishing

- Weave in all the ends. Wash as the yarn label says and lay flat to the measurements to dry.

In all: 5 pieces; 12 ends to weave in.

Found a mistake in this pattern? Tell us at flossfield.com, under Make a request.

For your own crochet, gifts and handmade pieces you sell. Do not resell or share this PDF.