Oversized sweater with balloon sleeves

M, to fit bust 37 in (94 cm) · US terms



Finished size
About 48 in (122 cm) at the bust and about 25¾ in (65.5 cm) long
To fit a bust of 37 in (94 cm)

Skill
Easy
Basic stitches, simple shaping and seams

Yarn
Medium (4), 2 colors

Hook
5.5 mm (US I-9)

Gauge
13 stitches and 11 rows to 4 in (10 cm)
In half double crochet (UK half treble).

What you need

Yarn A: dusty blue, main color — **about 1,200 yd (1,097 m), an estimate**
Yarn B: cream, contrast — **about 625 yd (572 m), an estimate**

By weight: about 910 g in all, an estimate, where 100 g is 200 yd (183 m).

Hook: 5.5 mm (US I-9), or the size that gives you the gauge. Also: yarn needle, scissors, tape measure and stitch markers.

To find how many balls: divide by the length on your yarn's label and round up. Buy them from one dye lot. The estimate is from the stitches of this size at this gauge.

Sizes

Size	To fit bust	Yarn, an estimate	Bust	Length	Armhole depth	Sleeve	Upper sleeve	Sleeve at its fullest	Cuff around	Neck	Back neck
XS	29 in (73.5 cm)	about 1,625 yd (1,486 m)	39½ in (100.5 cm)	25 in (63.5 cm)	7¼ in (18.5 cm)	18½ in (47 cm)	14¾ in (37.5 cm)	22¼ in (56.5 cm)	7¾ in (19.5 cm)	20¼ in (51.5 cm)	8½ in (21.5 cm)
S	33 in (84 cm)	about 1,725 yd (1,577 m)	44¼ in (112.5 cm)	25 in (63.5 cm)	8 in (20.5 cm)	18½ in (47 cm)	16 in (40.5 cm)	22¼ in (56.5 cm)	7¾ in (19.5 cm)	20¼ in (51.5 cm)	8½ in (21.5 cm)
M (this file)	**37 in (94 cm)**	**about 1,825 yd (1,669 m)**	**48 in (122 cm)**	**25¾ in (65.5 cm)**	**8¾ in (22 cm)**	**17¾ in (45 cm)**	**17¼ in (44 cm)**	**22¼ in (56.5 cm)**	**7¾ in (19.5 cm)**	**21½ in (54.5 cm)**	**9¼ in (23.5 cm)**
L	41 in (104 cm)	about 2,025 yd (1,852 m)	51¾ in (131.5 cm)	25¾ in (65.5 cm)	9 in (23 cm)	18½ in (47 cm)	17¾ in (45 cm)	24½ in (62 cm)	8½ in (21.5 cm)	21½ in (54.5 cm)	9¼ in (23.5 cm)
1X	45 in (114.5 cm)	about 2,125 yd (1,943 m)	56½ in (143.5 cm)	25¾ in (65.5 cm)	9½ in (24 cm)	17¾ in (45 cm)	19 in (48.5 cm)	24½ in (62 cm)	8½ in (21.5 cm)	21½ in (54.5 cm)	9¼ in (23.5 cm)

For your own crochet, gifts and handmade pieces you sell. Do not resell or share this PDF or copies of it.

2X	49 in (124.5 cm)	about 2,275 yd (2,080 m)	60¼ in (153 cm)	26¼ in (66.5 cm)	9¾ in (25 cm)	17¾ in (45 cm)	19¾ in (50 cm)	24½ in (62 cm)	9¼ in (23.5 cm)	22¼ in (56.5 cm)	9¼ in (23.5 cm)
3X	53 in (134.5 cm)	about 2,400 yd (2,195 m)	64 in (162.5 cm)	26¼ in (66.5 cm)	10½ in (26.5 cm)	17 in (43 cm)	21 in (53.5 cm)	27 in (68.5 cm)	9½ in (24 cm)	22¼ in (56.5 cm)	9¼ in (23.5 cm)
4X	57 in (145 cm)	about 2,475 yd (2,263 m)	67¾ in (172 cm)	26¼ in (66.5 cm)	11 in (28 cm)	17 in (43 cm)	22¼ in (56.5 cm)	27 in (68.5 cm)	9½ in (24 cm)	22¾ in (58 cm)	9¾ in (25 cm)
5X	61 in (155 cm)	about 2,600 yd (2,377 m)	71½ in (181.5 cm)	27 in (68.5 cm)	11¼ in (28.5 cm)	16½ in (42 cm)	22¾ in (58 cm)	27 in (68.5 cm)	9½ in (24 cm)	22¾ in (58 cm)	9¾ in (25 cm)

Schematic

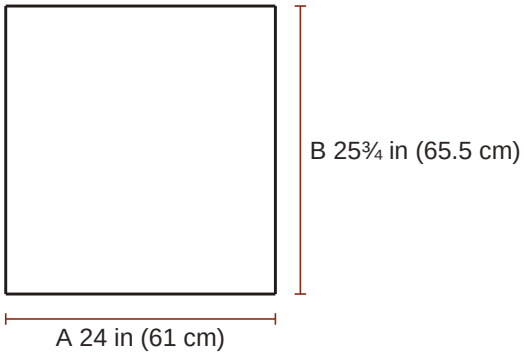

Back
A half the bust
B the length

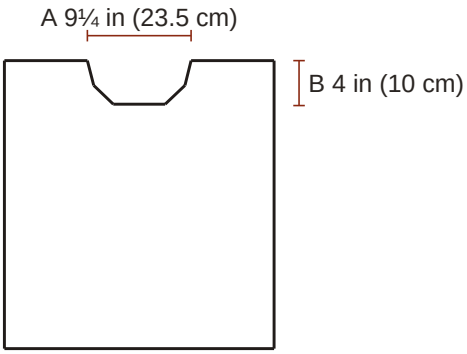

Front
A the neck
B how deep the neck is

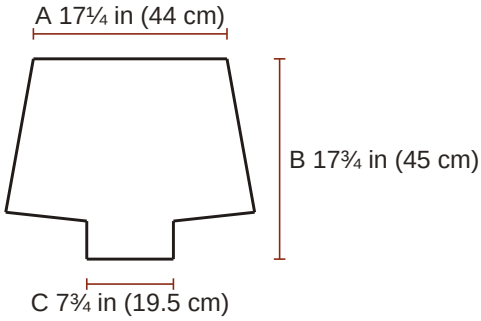

Sleeve (make 2)
A the top of the sleeve, opened flat
B the sleeve
C around the cuff

Gauge

13 stitches and 11 rows to 4 in (10 cm) in half double crochet.

> **The swatch.** A test piece to measure and pull out. It is not the start of the pattern. Ch 21; begin in the 2nd ch from the hook and work 16 rows of half double crochet on 20 sts, about 6¼ in (16 cm) wide and 5¾ in (14.5 cm) high, and measure 4 in (10 cm) in the middle. Use a larger hook if your swatch is small, a smaller one if it is large. Ribs: worked sideways, 14 rows and 13 sts to 4 in (10 cm), so a rib of 8 sts is about 2½ in (6.5 cm) deep and a rib of 11 sts is about 3½ in (9 cm) deep.

For your own crochet, gifts and handmade pieces you sell. Do not resell or share this PDF or copies of it.

Notes

- The finished bust is from 10½ in (26.5 cm) to 11½ in (29 cm) wider than the body measurement, by the size. Choose by the finished measurement you like; no fit is promised beyond the measurements given.
- The turning chain (ch 1 for single and half double crochet) never counts as a stitch. Work the first stitch of every row into the first stitch, at the base of the turning chain.
- The chain at the start of a round never counts as a stitch. Work the first stitch of the round into the stitch at its base, where the round was joined.
- Odd-numbered rows are right side rows. Mark the right side of each piece with a stitch marker or a scrap of yarn.
- A decrease counts as one stitch.
- The ribs are worked sideways in single crochet in the back loop (UK: double crochet). The pieces are worked up from a long edge of a rib. The rib draws in: it is a little narrower than the piece above it.
- Sew every seam with the yarn needle: with yarn B where the pieces are of yarn B, and with yarn A everywhere else. Cut a length about three times as long as the seam.
- Color changes in rows: work the last yarn over of the last stitch of the row before with the new yarn. Cut the old yarn, leaving an end of about 6 in (15 cm), or, if it is needed again at the same edge within 6 rows and that edge is straight, carry it loosely up the edge.
- In back loop only: insert the hook under the loop of the stitch that is farther from you, and leave the nearer loop free.

Instructions

M, to fit bust 37 in (94 cm). US terms.

ch chain, **sl st** slip stitch, **sc** single crochet (UK double crochet), **hdc** half double crochet (UK half treble), **Rnd** round, **st** stitch.

RS right side, the one that shows.

2 hdc in next st: both in one stitch. **hdc in next 32 sts**: one in each.

[ ] 18 times: work what is inside 18 times in all.

(8 sc): the stitches you have when the row is done. **How to read a pattern**.

Special stitches

hdc2tog (half double crochet 2 stitches together (UK half treble 2 together)): [yarn over, insert the hook in the next stitch and pull up a loop] twice (5 loops on the hook); yarn over and pull through all 5 loops.

Hem rib: make 2, one for the back and one for the front

Yarn B, cream.

☐ **Foundation**	With yarn B, ch 9.	
☐ **Row 1 (RS)**	Sc in 2nd ch from hook and in each ch across	(8 sc)
☐ **Rows 2 to 78**	Ch 1, turn; sc in back loop only of each st across	(8 sc)

2 3 4 5 6 7 8 9 10 11 12 13 14 15 16 17 18 19 20 21 22 23 24 25 26 27 28 29
30 31 32 33 34 35 36 37 38 39 40 41 42 43 44 45 46 47 48 49 50 51 52 53 54 55 56 57
58 59 60 61 62 63 64 65 66 67 68 69 70 71 72 73 74 75 76 77 78

☐ **End**	Fasten off.	

For your own crochet, gifts and handmade pieces you sell. Do not resell or share this PDF or copies of it.

Back

Yarn B, cream.

☐ **Foundation**	Colors: rows 1 to 20 yarn B; rows 21 to 64 yarn A. Hold a hem rib with one long edge at the top. Join yarn B at the right-hand end of that edge; ch 1, sc in the end of each rib row across (78 sc). This is row 1, and a right side row.	
☐ **Rows 2 to 64**	Ch 1, turn; hdc in each st across	(78 hdc)

2 3 4 5 6 7 8 9 10 11 12 13 14 15 16 17 18 19 20 21 22 23 24 25 26 27 28 29
30 31 32 33 34 35 36 37 38 39 40 41 42 43 44 45 46 47 48 49 50 51 52 53 54 55 56 57
58 59 60 61 62 63 64

☐ **End**	The back measures about 24 in (61 cm) wide and 25¾ in (65.5 cm) long, with the rib. Fasten off.	

Front

Yarn B, cream.

☐ **Foundation**	Colors: rows 1 to 20 yarn B; rows 21 to 53 yarn A. Hold a hem rib with one long edge at the top. Join yarn B at the right-hand end of that edge; ch 1, sc in the end of each rib row across (78 sc). This is row 1, and a right side row.	
☐ **Rows 2 to 53**	Ch 1, turn; hdc in each st across	(78 hdc)

2 3 4 5 6 7 8 9 10 11 12 13 14 15 16 17 18 19 20 21 22 23 24 25 26 27 28 29
30 31 32 33 34 35 36 37 38 39 40 41 42 43 44 45 46 47 48 49 50 51 52 53

☐ **End**	Do not fasten off.	

Front, first side of the neck

Yarn A, dusty blue.

☐ **Foundation**	Go on from row 53 of the front. This is the right side as worn. The neck edge is at the end of the next row.	
☐ **Row 54**	Ch 1, turn; hdc in next 32 sts, leave the last 46 sts unworked	(32 hdc)
☐ **Row 55**	Ch 1, turn; hdc2tog, hdc in each st across	(31 hdc)
☐ **Row 56**	Ch 1, turn; hdc in each st across to last 2 sts, hdc2tog	(30 hdc)
☐ **Rows 57 to 62**	Repeat Rows 55 and 56, 3 more times (28, 26, 24 hdc at the ends of the repeats)	(24 hdc)

57 58 59 60 61 62

☐ **Rows 63 to 64**	Ch 1, turn; hdc in each st across	(24 hdc)

63 64

☐ **End**	The 24 sts left are the shoulder. Fasten off.	

For your own crochet, gifts and handmade pieces you sell. Do not resell or share this PDF or copies of it.

Front, second side of the neck

Yarn A, dusty blue.

☐ **Foundation**	Go back to row 53 of the front, with the same side facing you as for row 54 of the first side. Skip the next 14 unworked sts of row 53 for the neck and join yarn A in the next st. This is the left side as worn. The first st of row 54 goes in the joining st. The neck edge is at the beginning of that row.	
☐ **Row 54**	Ch 1; hdc in each st across	(32 hdc)
☐ **Row 55**	Ch 1, turn; hdc in each st across to last 2 sts, hdc2tog	(31 hdc)
☐ **Row 56**	Ch 1, turn; hdc2tog, hdc in each st across	(30 hdc)
☐ **Rows 57 to 62**	Repeat Rows 55 and 56, 3 more times (28, 26, 24 hdc at the ends of the repeats)	(24 hdc)
	57 58 59 60 61 62	
☐ **Rows 63 to 64**	Ch 1, turn; hdc in each st across	(24 hdc)
	63 64	
☐ **End**	The 24 sts left are the shoulder. Fasten off.	

Cuff rib: make 2

Yarn B, cream.

☐ **Foundation**	With yarn B, ch 12.	
☐ **Row 1 (RS)**	Sc in 2nd ch from hook and in each ch across	(11 sc)
☐ **Rows 2 to 27**	Ch 1, turn; sc in back loop only of each st across	(11 sc)
	2 3 4 5 6 7 8 9 10 11 12 13 14 15 16 17 18 19 20 21 22 23 24 25 26 27	
☐ **End**	Fasten off.	

Sleeve: make 2

Yarn B, cream.

☐ **Foundation**	Colors: rows 1 to 10 yarn B; rows 11 to 40 yarn A. Hold a cuff rib with one long edge at the top. Join yarn B at the right-hand end of that edge; ch 1, sc in the end of each rib row across (27 sc). This is row 1, and a right side row.	
☐ **Row 2**	Ch 1, turn; 2 hdc in each of next 27 sts	(54 hdc)
☐ **Row 3**	Ch 1, turn; **[**hdc in next 2 sts, 2 hdc in next st**] 18 times**	(72 hdc)
☐ **Rows 4 to 24**	Ch 1, turn; hdc in each st across	(72 hdc)
	4 5 6 7 8 9 10 11 12 13 14 15 16 17 18 19 20 21 22 23 24	
☐ **Row 25**	Ch 1, turn; hdc2tog, hdc in each st across to last 2 sts, hdc2tog	(70 hdc)
☐ **Rows 26 to 39**	Repeat Rows 24 and 25, 7 more times (68, 66, 64, 62, 60, 58, 56 hdc at the ends of the repeats)	(56 hdc)
	26 27 28 29 30 31 32 33 34 35 36 37 38 39	

For your own crochet, gifts and handmade pieces you sell. Do not resell or share this PDF or copies of it.

☐ **Row 40**	Ch 1, turn; hdc in each st across	(56 hdc)
☐ **End**	The sleeve measures about 22¼ in (56.5 cm) across its widest part, 17¼ in (44 cm) across the top and 17¾ in (45 cm) long, with the cuff. Fasten off.	

Neckband

Yarn A, dusty blue.

☐ **Foundation**	Work this at step 2 of Assembly. With the right side facing, join yarn A in the first open st of the back neck, at the right shoulder seam (as worn); ch 1, sc in each of the 30 open sts of the back neck, sc in the end of each of the 11 rows down the left side of the neck, with 2 sc in the 3rd and 9th of them (13 sc), sc in each of the 14 sts left at the front, and sc in the end of each of the 11 rows up the right side of the neck, with 2 sc in the 3rd and 9th of them (13 sc); 70 sc in all; join with sl st in first sc. This is rnd 1.	
☐ **Rnds 2 to 4** 2 3 4	Ch 1; sc in each st around; join with sl st in first sc	(70 sc)
☐ **End**	Fasten off.	

Assembly

1. Shoulders: lay the front on the back with right sides together. Sew the 24 sts of each shoulder of the front to the 24 sts at that end of the top edge of the back. The middle 30 sts of the back stay open for the neck.

2. Neckband: work it now, as written above.

3. Markers: at each side edge of the back and of the front, place a marker in the end of row 41. The 24 rows from the marker to the shoulder seam, about 8¾ in (22 cm), are half of the armhole.

4. Sleeves: with right sides together, put the middle of the top edge of a sleeve at a shoulder seam and its two ends at the markers. Sew the top edge on: 28 sts of the sleeve to the 24 row ends of the front, and the other 28 sts to the 24 row ends of the back, about 7 sts to every 6 row ends.

5. Sides and sleeves: fold the sweater at the shoulders, right sides together. Sew each sleeve seam from the cuff edge to the underarm and go on down the side seam to the lower edge. At the two ribs the edges are the foundation chain and the last row of a rib: sew them stitch to stitch, 11 at the cuff and 8 at the hem. Between the ribs sew row end to row end.

Finishing

- Weave in all the ends. Wash as the yarn label says and lay flat to the measurements to dry.

In all: 4 pieces; 16,688 stitches (624 in each hem rib, 4,914 in the back, 4,056 in the front, 285 in the front, first side of the neck, 285 in the front, second side of the neck, 297 in each cuff rib, 2,548 in each sleeve, 210 in the neckband).

Found a mistake in this pattern? Tell us at flossfield.com, under Make a request.

For your own crochet, gifts and handmade pieces you sell. Do not resell or share this PDF or copies of it.