Pumpkin hat and diaper cover set

3-6 months, to fit waist 17½ in (44.5 cm) · US terms



Finished size

About 15 in (38 cm) at the hat and about 6 in (15 cm) at the hat from crown to edge

To fit a waist of 17½ in (44.5 cm) and a hip of 18 in (45.5 cm), head 16½ in (42 cm)

Skill

Easy

Basic stitches, simple shaping and two short seams

Yarn

Light (3), 3 colors

Hook

4.5 mm (US 7)

Gauge

16 stitches and 13½ rows to 4 in (10 cm)

In half double crochet (UK half treble).

What you need

Yarn A: pumpkin, main color	**about 250 yd (229 m), an estimate**
Yarn B: leaf green, contrast	**about 45 yd (41 m), an estimate**
Yarn C: pear, color 3	**about 5 yd (5 m), an estimate**

By weight: about 120 g in all, an estimate, where 100 g is 250 yd (229 m).

Hook: 4.5 mm (US 7), or the size that gives you the gauge. Also: yarn needle, scissors, tape measure, a little fiberfill stuffing and a water-soluble marking pen or pins.

To find how many balls: divide by the length on your yarn's label and round up. Buy them from one dye lot. The estimate is from the stitches of this size at this gauge.

Sizes

Size	Waist	Yarn, an estimate	Hat around	Hat from crown to edge	Cover around the hip	Around the waistband	Front waist to the middle of the crotch	Back waist to the middle of the crotch	Around each leg opening
Newborn	13½ in (34.5 cm)	about 200 yd (183 m)	13 in (33 cm)	5 in (12.5 cm)	17 in (43 cm)	15 in (38 cm)	5¼ in (13.5 cm)	5¾ in (14.5 cm)	7 in (18 cm)
0-3 months	16½ in (42 cm)	about 275 yd (251 m)	14 in (35.5 cm)	5½ in (14 cm)	20 in (51 cm)	18 in (45.5 cm)	6½ in (16.5 cm)	7½ in (19 cm)	8 in (20.5 cm)
3-6 months (this file)	**17½ in (44.5 cm)**	**about 300 yd (274 m)**	**15 in (38 cm)**	**6 in (15 cm)**	**21 in (53.5 cm)**	**19 in (48.5 cm)**	**7 in (18 cm)**	**8¼ in (21 cm)**	**8½ in (21.5 cm)**

For your own crochet, gifts and handmade pieces you sell. Do not resell or share this PDF or copies of it.

6-12 months	18½ in (47 cm)	about 325 yd (297 m)	16 in (40.5 cm)	6¼ in (16 cm)	22 in (56 cm)	20 in (51 cm)	7¼ in (18.5 cm)	8½ in (21.5 cm)	9 in (23 cm)

Schematic

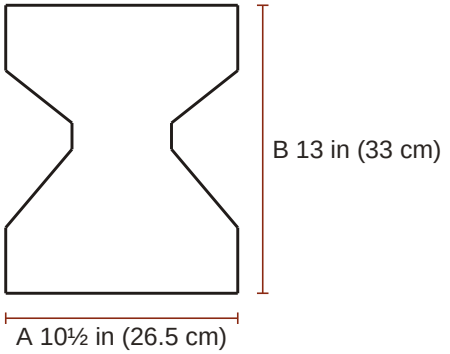

Cover
A half the cover the hip
B from top to bottom

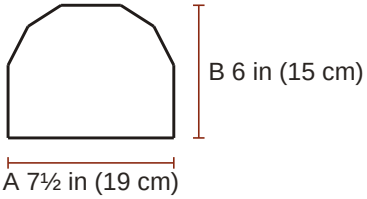

Hat, laid flat
A half the hat
B the hat from crown to edge

Gauge

16 stitches and 13½ rows to 4 in (10 cm) in half double crochet.

> **The swatch.** A test piece to measure and pull out. It is not the start of the pattern. Ch 25; begin in the 2nd ch from the hook and work 20 rows of half double crochet on 24 sts, about 6 in (15 cm) wide and 6 in (15 cm) high, and measure 4 in (10 cm) in the middle. Use a larger hook if your swatch is small, a smaller one if it is large. Edgings: 16 sts to 4 in (10 cm) in double crochet (UK: treble); one round of single crochet, one of double crochet and one of post stitches are about 1 1/8 in (2.9 cm) high together. Hat: the rounds have the same gauge as the rows of the cover. Stalk and leaves: single crochet (UK: double crochet), about 18½ rounds or rows to 4 in (10 cm); work them firmly. Post stitches stand in rows and rounds of half double crochet and do not change their height.

Notes

- The hat is ½ to 1½ in (1.5 to 4 cm) smaller around than the head it is for, and stretches. The hip of the cover is 3 in (7.5 cm) wider than the body measurement at each size, to go over a diaper (UK: nappy). Choose by the finished measurement you like; no fit is promised beyond the measurements given.
- The cover is worked in rows that are turned. The ch 1 at the start of a row never counts as a stitch: work the first stitch of the row into the first stitch, at the base of the ch 1.
- The waistband and the leg edgings are worked in rounds that are not turned; the right side always faces you. The chain at the start of a round never counts as a stitch: work the first stitch into the stitch at its base.
- A decrease counts as one stitch.
- The rounds of the hat and the stalk are not turned either. The hat is worked from the crown down.
- The ridges are lines of post stitches, each one worked around the post stitch below it. On the cover they are fpdc on right side rows and bpdc on wrong side rows, so that they all stand out on the right side.
- Whip stitch: with the yarn needle, sew over and over the edge, each stitch through both layers, with the stitches close together.

For your own crochet, gifts and handmade pieces you sell. Do not resell or share this PDF or copies of it.

- Sew every part on firmly, through the fabric several times, weave the ends in well, and look at them before each wear. The hat is for a baby who is awake and watched; take it off for sleep.
- To work a post stitch around a dc2tog, take the hook around both of its legs together.

Instructions

3-6 months, to fit waist 17½ in (44.5 cm). US terms.

ch chain, **sl st** slip stitch, **sc** single crochet (UK double crochet), **hdc** half double crochet (UK half treble), **dc** double crochet (UK treble), **Rnd** round, **st** stitch.

RS right side, the one that shows.

2 hdc in next st: both in one stitch. **hdc in each of next 8 sts**: one in each.

[ ] 8 times: work what is inside 8 times in all.

(8 hdc): the stitches you have when the round is done. **How to read a pattern**.

Special stitches

sc2tog (single crochet 2 stitches together (UK double crochet 2 together)): Insert the hook in the next stitch and pull up a loop, insert the hook in the following stitch and pull up a loop (3 loops on the hook); yarn over and pull through all 3 loops.

hdc2tog (half double crochet 2 stitches together (UK half treble 2 together)): [yarn over, insert the hook in the next stitch and pull up a loop] twice (5 loops on the hook); yarn over and pull through all 5 loops.

dc2tog (double crochet 2 stitches together (UK treble 2 together)): [yarn over, insert the hook in the next stitch and pull up a loop, yarn over and pull through 2 loops] twice (3 loops on the hook); yarn over and pull through all 3 loops.

fpdc (front post double crochet (UK front post treble)): Yarn over, insert the hook from the front to the back and to the front again around the post of the stitch named, pull up a loop, [yarn over and pull through 2 loops] twice. The front is the side that faces you. A post stitch takes the place of the stitch it is worked around: do not work into the top of that stitch as well.

bpdc (back post double crochet (UK back post treble)): As fpdc, but insert the hook from the back to the front and to the back again around the post.

Hat

Yarn A, pumpkin.

☐ **Foundation**	With yarn A, ch 3; join with sl st in first ch to form a ring.	
☐ **Rnd 1**	Ch 1; 8 hdc in ring; join with sl st in first hdc	(8 hdc)
☐ **Rnd 2**	Ch 1; 2 hdc in each of next 8 sts; join with sl st in first hdc	(16 hdc)
☐ **Rnd 3**	Ch 1; **[**2 hdc in next st, fpdc around next st**] 8 times**; join with sl st in first hdc	(16 hdc, 8 fpdcs)
☐ **Rnd 4**	Ch 1; **[**hdc in next st, 2 hdc in next st, fpdc around next st**] 8 times**; join with sl st in first hdc	(24 hdc, 8 fpdcs)
☐ **Rnd 5**	Ch 1; **[**hdc in next 2 sts, 2 hdc in next st, fpdc around next st**] 8 times**; join with sl st in first hdc	(32 hdc, 8 fpdcs)
☐ **Rnd 6**	Ch 1; **[**hdc in next 4 sts, fpdc around next st**] 8 times**; join with sl st in first hdc	(32 hdc, 8 fpdcs)

For your own crochet, gifts and handmade pieces you sell. Do not resell or share this PDF or copies of it.

☐ **Rnd 7**	Ch 1; **[**2 hdc in next st, hdc in next 3 sts, fpdc around next st**] 8 times**; join with sl st in first hdc	(40 hdc, 8 fpdcs)
☐ **Rnd 8**	Ch 1; **[**hdc in next 5 sts, fpdc around next st**] 8 times**; join with sl st in first hdc	(40 hdc, 8 fpdcs)
☐ **Rnd 9**	Ch 1; **[**hdc in next 4 sts, 2 hdc in next st, fpdc around next st**] 8 times**; join with sl st in first hdc	(48 hdc, 8 fpdcs)
☐ **Rnd 10**	Ch 1; **[**hdc in next 6 sts, fpdc around next st**] 8 times**; join with sl st in first hdc	(48 hdc, 8 fpdcs)
☐ **Rnd 11**	Ch 1; **[**hdc in next 5 sts, 2 hdc in next st, fpdc around next st, hdc in next 6 sts, fpdc around next st**] 4 times**; join with sl st in first hdc	(52 hdc, 8 fpdcs)
☐ **Rnds 12 to 16**	Ch 1; **[**hdc in next 7 sts, fpdc around next st, hdc in next 6 sts, fpdc around next st**] 4 times**; join with sl st in first hdc	(52 hdc, 8 fpdcs)
12 13 14 15 16		
☐ **Rnd 17**	Ch 2; dc in each st around; join with sl st in first dc	(60 dc)
☐ **Rnds 18 to 19**	Ch 2; **[**fpdc around next st, bpdc around next st**] 30 times**; join with sl st in first fpdc	(30 fpdcs, 30 bpdcs)
18 19		
☐ **End**	Fasten off.	

Cover

Yarn A, pumpkin.

☐ **Foundation**	The cover is one piece: it begins at the front waist, goes down to the crotch and up again to the back waist. Rows 1 to 10 are the front, above the legs; rows 11 to 18 shape the front leg edges; rows 19 to 22 are the crotch; rows 23 to 34 shape the back leg edges; rows 35 to 44 are the back, above the legs. With yarn A, ch 43.	
☐ **Row 1 (RS)**	Hdc in 2nd ch from hook and in each ch across	(42 hdc)
☐ **Row 2**	Ch 1, turn; hdc in next 8 sts, **[**bpdc around next st, hdc in next 4 sts**] 5 times**, bpdc around next st, hdc in next 8 sts	(36 hdc, 6 bpdcs)
☐ **Row 3**	Ch 1, turn; hdc in next 8 sts, **[**fpdc around next st, hdc in next 4 sts**] 5 times**, fpdc around next st, hdc in next 8 sts	(36 hdc, 6 fpdcs)
☐ **Rows 4 to 9**	Repeat Rows 2 and 3, 3 more times	(36 hdc, 6 fpdcs)
4 5 6 7 8 9		
☐ **Row 10**	Ch 1, turn; hdc in next 8 sts, **[**bpdc around next st, hdc in next 4 sts**] 5 times**, bpdc around next st, hdc in next 8 sts	(36 hdc, 6 bpdcs)

For your own crochet, gifts and handmade pieces you sell. Do not resell or share this PDF or copies of it.

☐ **Row 11**	Ch 1, turn; hdc2tog twice, hdc in next 4 sts, **[**fpdc around next st, hdc in next 4 sts**] 5 times**, fpdc around next st, hdc in next 4 sts, hdc2tog twice (32 hdc, 6 fpdcs)
☐ **Row 12**	Ch 1, turn; hdc2tog twice, hdc in next 2 sts, **[**bpdc around next st, hdc in next 4 sts**] 5 times**, bpdc around next st, hdc in next 2 sts, hdc2tog twice (28 hdc, 6 bpdcs)
☐ **Row 13**	Ch 1, turn; hdc2tog twice, hdc in next 5 sts, **[**fpdc around next st, hdc in next 4 sts**] 3 times**, fpdc around next st, hdc in next 5 sts, hdc2tog twice (26 hdc, 4 fpdcs)
☐ **Row 14**	Ch 1, turn; hdc2tog twice, hdc in next 3 sts, **[**bpdc around next st, hdc in next 4 sts**] 3 times**, bpdc around next st, hdc in next 3 sts, hdc2tog twice (22 hdc, 4 bpdcs)
☐ **Row 15**	Ch 1, turn; hdc2tog, hdc in next 3 sts, **[**fpdc around next st, hdc in next 4 sts**] 3 times**, fpdc around next st, hdc in next 3 sts, hdc2tog (20 hdc, 4 fpdcs)
☐ **Row 16**	Ch 1, turn; hdc2tog, hdc in next 2 sts, **[**bpdc around next st, hdc in next 4 sts**] 3 times**, bpdc around next st, hdc in next 2 sts, hdc2tog (18 hdc, 4 bpdcs)
☐ **Row 17**	Ch 1, turn; hdc2tog, hdc in next st, **[**fpdc around next st, hdc in next 4 sts**] 3 times**, fpdc around next st, hdc in next st, hdc2tog (16 hdc, 4 fpdcs)
☐ **Row 18**	Ch 1, turn; hdc2tog, hdc in next 5 sts, bpdc around next st, hdc in next 4 sts, bpdc around next st, hdc in next 5 sts, hdc2tog (16 hdc, 2 bpdcs)
☐ **Row 19**	Ch 1, turn; hdc in next 6 sts, fpdc around next st, hdc in next 4 sts, fpdc around next st, hdc in next 6 sts (16 hdc, 2 fpdcs)
☐ **Row 20**	Ch 1, turn; hdc in next 6 sts, bpdc around next st, hdc in next 4 sts, bpdc around next st, hdc in next 6 sts (16 hdc, 2 bpdcs)
☐ **Rows 21 to 22** 21 22	Repeat Rows 19 and 20, once more (16 hdc, 2 bpdcs)
☐ **Row 23**	Ch 1, turn; 2 hdc in each of next 2 sts, hdc in next 4 sts, fpdc around next st, hdc in next 4 sts, fpdc around next st, hdc in next 4 sts, 2 hdc in each of next 2 sts (20 hdc, 2 fpdcs)
☐ **Row 24**	Ch 1, turn; 2 hdc in each of next 2 sts, hdc in next 6 sts, bpdc around next st, hdc in next 4 sts, bpdc around next st, hdc in next 6 sts, 2 hdc in each of next 2 sts (24 hdc, 2 bpdcs)
☐ **Row 25**	Ch 1, turn; 2 hdc in each of next 2 sts, hdc in next 3 sts, **[**fpdc around next st, hdc in next 4 sts**] 3 times**, fpdc around next st, hdc in next 3 sts, 2 hdc in each of next 2 sts (26 hdc, 4 fpdcs)
☐ **Row 26**	Ch 1, turn; 2 hdc in each of next 2 sts, hdc in next 5 sts, **[**bpdc around next st, hdc in next 4 sts**] 3 times**, bpdc around next st, hdc in next 5 sts, 2 hdc in each of next 2 sts (30 hdc, 4 bpdcs)
☐ **Row 27**	Ch 1, turn; hdc in next 4 sts, **[**fpdc around next st, hdc in next 4 sts**] 5 times**, fpdc around next st, hdc in next 4 sts (28 hdc, 6 fpdcs)

For your own crochet, gifts and handmade pieces you sell. Do not resell or share this PDF or copies of it.

☐ **Row 28**	Ch 1, turn; 2 hdc in next st, hdc in next 3 sts, **[**bpdc around next st, hdc in next 4 sts**] 5 times**, bpdc around next st, hdc in next 3 sts, 2 hdc in next st	(30 hdc, 6 bpdcs)
☐ **Row 29**	Ch 1, turn; hdc in next 5 sts, **[**fpdc around next st, hdc in next 4 sts**] 5 times**, fpdc around next st, hdc in next 5 sts	(30 hdc, 6 fpdcs)
☐ **Row 30**	Ch 1, turn; 2 hdc in next st, hdc in next 4 sts, **[**bpdc around next st, hdc in next 4 sts**] 5 times**, bpdc around next st, hdc in next 4 sts, 2 hdc in next st	(32 hdc, 6 bpdcs)
☐ **Row 31**	Ch 1, turn; hdc in next 6 sts, **[**fpdc around next st, hdc in next 4 sts**] 5 times**, fpdc around next st, hdc in next 6 sts	(32 hdc, 6 fpdcs)
☐ **Row 32**	Ch 1, turn; 2 hdc in next st, hdc in next 5 sts, **[**bpdc around next st, hdc in next 4 sts**] 5 times**, bpdc around next st, hdc in next 5 sts, 2 hdc in next st	(34 hdc, 6 bpdcs)
☐ **Row 33**	Ch 1, turn; hdc in next 7 sts, **[**fpdc around next st, hdc in next 4 sts**] 5 times**, fpdc around next st, hdc in next 7 sts	(34 hdc, 6 fpdcs)
☐ **Row 34**	Ch 1, turn; 2 hdc in next st, hdc in next 6 sts, **[**bpdc around next st, hdc in next 4 sts**] 5 times**, bpdc around next st, hdc in next 6 sts, 2 hdc in next st	(36 hdc, 6 bpdcs)
☐ **Row 35**	Ch 1, turn; hdc in next 8 sts, **[**fpdc around next st, hdc in next 4 sts**] 5 times**, fpdc around next st, hdc in next 8 sts	(36 hdc, 6 fpdcs)
☐ **Row 36**	Ch 1, turn; hdc in next 8 sts, **[**bpdc around next st, hdc in next 4 sts**] 5 times**, bpdc around next st, hdc in next 8 sts	(36 hdc, 6 bpdcs)
☐ **Rows 37 to 44** 37 38 39 40 41 42 43 44	Repeat Rows 35 and 36, 4 more times	(36 hdc, 6 bpdcs)
☐ **End**	Fasten off, leaving an end of about 12 in (30 cm) for sewing. Side seams: fold the piece at the crotch, right sides together, so that the foundation chain lies along row 44. At each side sew the ends of rows 1 to 10 to the ends of rows 44 to 35, row 1 to row 44 and row 10 to row 35, in whip stitch, with the long end at one side and a new length of yarn A at the other. Turn the right side out.	

Waistband

Yarn B, leaf green.

☐ **Foundation**	With the right side facing and the waist uppermost, join yarn B at the right side seam (as worn); ch 1, beginning in the st next to the seam, sc in each of the 42 sts of row 44 of the cover piece, across the back, then sc in each of the 42 chs of the foundation chain of the cover piece, along their free side, across the front (84 sc); the ch skipped at the start of row 1 stays free; join with sl st in first sc. This is rnd 1.	
☐ **Rnd 2**	Ch 2; **[**dc in next 8 sts, dc2tog**] 4 times**, **[**dc in next 9 sts, dc2tog**] 4 times**; join with sl st in first dc	(76 dc)

For your own crochet, gifts and handmade pieces you sell. Do not resell or share this PDF or copies of it.

☐ **Rnd 3**	Ch 2; **[**fpdc around next st, bpdc around next st**] 38 times**; join with sl st in first fpdc (38 fpdcs, 38 bpdcs)	
☐ **End**	Fasten off.	

Leg edging: make 2

Yarn A, pumpkin.

☐ **Foundation**	With the right side facing, join yarn A at the lower end of a side seam; ch 2, work along the leg edge, in the ends of the 24 rows that go from this seam down to the crotch and up again to this seam (at the right side seam, as worn, from row 11 to row 34; at the left side seam from row 34 to row 11): [dc in the end of each of next 2 rows, 2 dc in the end of next row] 4 times, [dc in the end of next row, 2 dc in the end of next row] 6 times (34 dc); join with sl st in first dc. This is rnd 1.	
☐ **Rnd 2**	Ch 2; **[**fpdc around next st, bpdc around next st**] 17 times**; join with sl st in first fpdc (17 fpdcs, 17 bpdcs)	
☐ **End**	Fasten off. Work the second leg edging in the same way at the other side seam.	

Stalk

Yarn B, leaf green.

☐ **Foundation**	With yarn B, ch 3; join with sl st in first ch to form a ring.	
☐ **Rnd 1**	Ch 1; 6 sc in ring; join with sl st in first sc	(6 sc)
☐ **Rnds 2 to 5** 2 3 4 5	Ch 1; sc in each st around; join with sl st in first sc	(6 sc)
☐ **Rnd 6**	Ch 1; **[**sc in next st, 2 sc in next st**] 3 times**; join with sl st in first sc	(9 sc)
☐ **Rnd 7**	Ch 1; sc in each st around; join with sl st in first sc	(9 sc)
☐ **Rnd 8**	Ch 1; **[**sc in next 2 sts, 2 sc in next st**] 3 times**; join with sl st in first sc	(12 sc)
☐ **Rnd 9**	Ch 1; **[**sc in next 3 sts, 2 sc in next st**] 3 times**; join with sl st in first sc	(15 sc)
☐ **End**	Fasten off, leaving an end of about 22 in (55 cm) for sewing. Stuff the stalk firmly with fiberfill; its last rnd is the open end.	

Leaf: make 3

Yarn B, leaf green.

☐ **Foundation**	With yarn B, ch 4.	
☐ **Row 1 (RS)**	Sc in 2nd ch from hook and in each ch across	(3 sc)
☐ **Rows 2 to 3** 2 3	Ch 1, turn; 2 sc in first st, sc in each st across to last st, 2 sc in last st	(7 sc)
☐ **Rows 4 to 5** 4 5	Ch 1, turn; sc in each st across	(7 sc)

For your own crochet, gifts and handmade pieces you sell. Do not resell or share this PDF or copies of it.

☐ **Rows 6 to 7** 6 7	Ch 1, turn; sc2tog, sc in each st across to last 2 sts, sc2tog	(3 sc)
☐ **Row 8**	Ch 1, turn; sc2tog, sc in next st	(2 sc)
☐ **Row 9**	Ch 1, turn; sc2tog	(1 sc)
☐ **End**	The foundation chain is the base of the leaf and row 9 its tip. Fasten off, leaving an end of about 16 in (40 cm) for sewing.	

Assembly

1. Stalk: the rnds of the hat are counted from the crown, and the sts of a rnd from its first st, at the middle of the back. Set the open end of the stalk (15 sts) on the middle of the crown, over the join of the ring, so that its edge lies on rnd 2 all round. Sew it on with whip stitch, with its own end, going round twice.

2. Hat leaf: work a vein first, with a length of yarn C about 14 in (35 cm) long: a line of chain stitch up the middle of the leaf, on its right side, from row 1 to row 8. Chain stitch: bring the needle up, put it in again at the same place with the yarn held in a loop on the right side, bring it up again ¼ in (0.5 cm) further on inside the loop, and draw up; go on from there, and end with a short stitch over the last loop. The front of the hat has a ridge at its middle, st 30 of a rnd of 60 sts. Lay the leaf on the front of the hat, right side up, with its base against the stalk and its tip pointing down and to the left, so that the middle of its tip lies on rnd 8, on the next ridge to the left of the middle one as you look at the front. Pin it flat and sew it down all round with whip stitch, with its own end.

3. Hat vine: with a length of yarn B about 80 in (200 cm) long, folded double, embroider a curl in chain stitch on the front of the hat, to the right of the middle ridge as you look at it: from the edge of the stalk down over rnds 4, 5 and 6 and out to the right to rnd 8, then in a ring 1 in (2.5 cm) across that goes down, out to the right, up and back to the left, and half round again inside it. Draw the curl with a water-soluble pen or pins first.

4. Cover leaves: lay the cover with its front up and the waist uppermost. Rows are counted from the foundation chain, and the middle of the front lies between sts 21 and 22 of a row. Work a vein on each of the two leaves left, as on the hat leaf. Lay the two leaves on the front, right side up, with the corners of their bases meeting at the middle of the front, on row 3, under the waistband, one leaf slanting down to the left and one slanting down to the right, so that the middle of each tip lies on row 7, 7 sts out from the middle. Pin them flat and sew them down all round with whip stitch, with their own ends.

5. Cover vine: with a length of yarn B about 80 in (200 cm) long, folded double, embroider a curl in chain stitch on the front: from the place where the two leaves meet straight down the middle to row 10, then in a ring 1½ in (4 cm) across that goes down, out to the right, up and back to the left, and half round again inside it.

Finishing

- Weave in all the ends. Wash as the yarn label says and lay flat to the measurements to dry.

In all: 5 pieces.

Found a mistake in this pattern? Tell us at flossfield.com, under Make a request.

For your own crochet, gifts and handmade pieces you sell. Do not resell or share this PDF or copies of it.