Quick bulky sweater, two rectangles

M, to fit bust 37 in (94 cm) · US terms



Finished size

About 44¾ in (113.5 cm) at the bust and about 23¾ in (60.5 cm) long

To fit a bust of 37 in (94 cm)

Skill

Easy

Basic stitches, a simple neck, seams and ribs in rounds

Yarn

Bulky (5), 2 colors

Hook

8 mm (US L-11)

Gauge

10 stitches and 8½ rows to 4 in (10 cm)

In half double crochet (UK half treble).

What you need

Yarn A: cream, main color — **about 1,075 yd (983 m), an estimate**

Yarn B: mustard, contrast — **about 85 yd (78 m), an estimate**

By weight: about 890 g in all, an estimate, where 100 g is 130 yd (119 m).

Hook: 8 mm (US L-11), or the size that gives you the gauge. Also: yarn needle, scissors, tape measure and stitch markers.

To find how many balls: divide by the length on your yarn's label and round up. Buy them from one dye lot. The estimate is from the stitches of this size at this gauge.

Sizes

Size	To fit bust	Yarn, an estimate	Bust	Length, with the hem	Armhole depth	Sleeve, with the cuff	Upper sleeve	Cuff around, at its last round	Back neck	Neck
XS	29 in (73.5 cm)	about 975 yd (892 m)	36¾ in (93.5 cm)	22¾ in (58 cm)	7¼ in (18.5 cm)	17 in (43 cm)	14½ in (37 cm)	7¼ in (18.5 cm)	8¾ in (22 cm)	20 in (51 cm)
S	33 in (84 cm)	about 1,105 yd (1,010 m)	41½ in (105.5 cm)	23¾ in (60.5 cm)	8 in (20.5 cm)	17 in (43 cm)	16 in (40.5 cm)	8 in (20.5 cm)	8¾ in (22 cm)	20 in (51 cm)
M (this file)	**37 in (94 cm)**	**about 1,160 yd (1,061 m)**	**44¾ in (113.5 cm)**	**23¾ in (60.5 cm)**	**8 in (20.5 cm)**	**17 in (43 cm)**	**16 in (40.5 cm)**	**8 in (20.5 cm)**	**8¾ in (22 cm)**	**20 in (51 cm)**
L	41 in (104 cm)	about 1,295 yd (1,184 m)	49½ in (125.5 cm)	23¾ in (60.5 cm)	8¾ in (22 cm)	17 in (43 cm)	17½ in (44.5 cm)	8¾ in (22 cm)	8¾ in (22 cm)	20 in (51 cm)
1X	45 in (114.5 cm)	about 1,320 yd (1,207 m)	52¾ in (134 cm)	23¾ in (60.5 cm)	8¾ in (22 cm)	16 in (40.5 cm)	17½ in (44.5 cm)	8¾ in (22 cm)	9½ in (24 cm)	21½ in (54.5 cm)

For your own crochet, gifts and handmade pieces you sell. Do not resell or share this PDF or copies of it.

2X	49 in (124.5 cm)	about 1,480 yd (1,353 m)	57½ in (146 cm)	24¾ in (63 cm)	9½ in (24 cm)	16 in (40.5 cm)	19¼ in (49 cm)	9½ in (24 cm)	9½ in (24 cm)	21½ in (54.5 cm)
3X	53 in (134.5 cm)	about 1,510 yd (1,381 m)	60¾ in (154.5 cm)	24¾ in (63 cm)	9½ in (24 cm)	15 in (38 cm)	19¼ in (49 cm)	9½ in (24 cm)	9½ in (24 cm)	21½ in (54.5 cm)
4X	57 in (145 cm)	about 1,620 yd (1,481 m)	65½ in (166.5 cm)	24¾ in (63 cm)	10½ in (26.5 cm)	15 in (38 cm)	20¾ in (52.5 cm)	9½ in (24 cm)	9½ in (24 cm)	21½ in (54.5 cm)
5X	61 in (155 cm)	about 1,725 yd (1,577 m)	68¾ in (174.5 cm)	25¾ in (65.5 cm)	11¼ in (28.5 cm)	14 in (35.5 cm)	22½ in (57 cm)	9½ in (24 cm)	9½ in (24 cm)	21½ in (54.5 cm)

Schematic

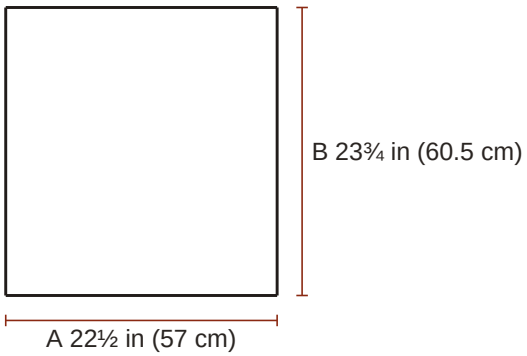

Back
A half the bust
B the length

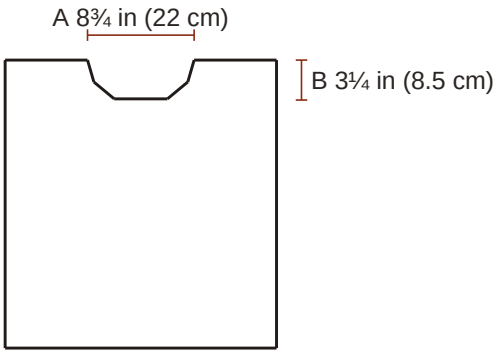

Front
A the neck
B how deep the neck is

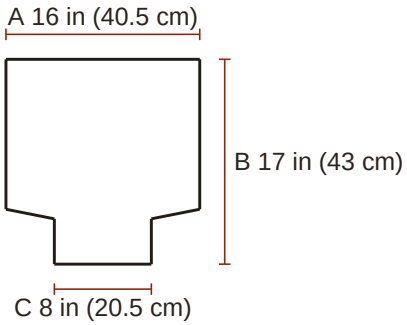

Sleeve (make 2)
A the top of the sleeve, opened flat
B the sleeve
C around the cuff

Gauge

10 stitches and 8½ rows to 4 in (10 cm) in half double crochet.

> **The swatch.** A test piece to measure and pull out. It is not the start of the pattern. Ch 16; begin in the 2nd ch from the hook and work 13 rows of half double crochet on 15 sts, about 6 in (15 cm) wide and 6 in (15 cm) high, and measure 4 in (10 cm) in the middle. Use a larger hook if your swatch is small, a smaller one if it is large. Ribs of the hem, the cuffs and the neckband: rounds of front and back post double crochet, 6 rounds to 4 in (10 cm). The rib draws in: it is a little narrower than the piece above it, and stretches.

For your own crochet, gifts and handmade pieces you sell. Do not resell or share this PDF or copies of it.

Notes

- The finished bust is from 7¾ in (19.5 cm) to 8½ in (21.5 cm) wider than the body measurement, by the size. Choose by the finished measurement you like; no fit is promised beyond the measurements given.
- The turning chain (ch 1 for single and half double crochet, ch 2 for double crochet) never counts as a stitch. Work the first stitch of every row into the first stitch, at the base of the turning chain.
- The chain at the start of a round never counts as a stitch. Work the first stitch of the round into the stitch at its base, where the round was joined.
- Odd-numbered rows are right side rows. The rounds of the ribs are all worked with the right side facing. Mark the right side of each piece with a stitch marker or a scrap of yarn.
- A decrease counts as one stitch.
- Sew every seam with the yarn needle and yarn A: cut a length about three times as long as the seam.
- Color changes in rows: work the last yarn over of the last stitch of the row before with the new yarn. Cut the old yarn, leaving an end of about 6 in (15 cm), or, if it is needed again at the same edge within 6 rows and that edge is straight, carry it loosely up the edge.

Instructions

M, to fit bust 37 in (94 cm). US terms.

ch chain, **sl st** slip stitch, **sc** single crochet (UK double crochet), **hdc** half double crochet (UK half treble), **dc** double crochet (UK treble), **Rnd** round, **st** stitch.
RS right side, the one that shows.
[ ] 25 times: work what is inside 25 times in all.
(56 hdc): the stitches you have when the row is done. **How to read a pattern**.

Special stitches

hdc2tog (half double crochet 2 stitches together (UK half treble 2 together)): [yarn over, insert the hook in the next stitch and pull up a loop] twice (5 loops on the hook); yarn over and pull through all 5 loops.

fpdc (front post double crochet (UK front post treble)): Yarn over, insert the hook from the front to the back and to the front again around the post of the stitch named, pull up a loop, [yarn over and pull through 2 loops] twice. The front is the side that faces you. A post stitch takes the place of the stitch it is worked around: do not work into the top of that stitch as well.

bpdc (back post double crochet (UK back post treble)): As fpdc, but insert the hook from the back to the front and to the back again around the post.

Back

Yarn A, cream.

☐ **Foundation**	With yarn A, ch 57. Colors: rows 1 to 20 yarn A; rows 21 to 23 yarn B; rows 24 to 44 yarn A.	
☐ **Row 1 (RS)**	Hdc in 2nd ch from hook and in each ch across	(56 hdc)
☐ **Rows 2 to 44**	Ch 1, turn; hdc in each st across	(56 hdc)

2 3 4 5 6 7 8 9 10 11 12 13 14 15 16 17 18 19 20 21 22 23 24 25 26 27 28 29
30 31 32 33 34 35 36 37 38 39 40 41 42 43 44

☐ **End**	The back measures about 22½ in (57 cm) wide and 20¾ in (52.5 cm) long, without the hem. Its foundation chain is the lower edge and row 44 is the top edge. Fasten off.

For your own crochet, gifts and handmade pieces you sell. Do not resell or share this PDF or copies of it.

Front

Yarn A, cream.

☐ **Foundation**	With yarn A, ch 57. Colors: rows 1 to 20 yarn A; rows 21 to 23 yarn B; rows 24 to 37 yarn A.	
☐ **Row 1 (RS)**	Hdc in 2nd ch from hook and in each ch across	(56 hdc)
☐ **Rows 2 to 37**	Ch 1, turn; hdc in each st across	(56 hdc)
	2 3 4 5 6 7 8 9 10 11 12 13 14 15 16 17 18 19 20 21 22 23 24 25 26 27 28 29 30 31 32 33 34 35 36 37	
☐ **End**	Do not fasten off.	

Front, first side of the neck

Yarn A, cream.

☐ **Foundation**	Go on from row 37 of the front. This is the right side as worn. The neck edge is at the end of the next row.	
☐ **Row 38**	Ch 1, turn; hdc in next 22 sts, leave the last 34 sts unworked	(22 hdc)
☐ **Row 39**	Ch 1, turn; hdc2tog, hdc in each st across	(21 hdc)
☐ **Row 40**	Ch 1, turn; hdc in each st across to last 2 sts, hdc2tog	(20 hdc)
☐ **Rows 41 to 42**	Repeat Rows 39 and 40, once more	(18 hdc)
	41 42	
☐ **Row 43**	Ch 1, turn; hdc2tog, hdc in each st across	(17 hdc)
☐ **Row 44**	Ch 1, turn; hdc in each st across	(17 hdc)
☐ **End**	The 17 sts left are the shoulder. Fasten off.	

Front, second side of the neck

Yarn A, cream.

☐ **Foundation**	Go back to row 37 of the front, with the same side facing you as for row 38 of the first side. Skip the next 12 unworked sts of row 37 for the neck and join yarn A in the next st. This is the left side as worn. The first st of row 38 goes in the joining st. The neck edge is at the beginning of that row.	
☐ **Row 38**	Ch 1; hdc in each st across	(22 hdc)
☐ **Row 39**	Ch 1, turn; hdc in each st across to last 2 sts, hdc2tog	(21 hdc)
☐ **Row 40**	Ch 1, turn; hdc2tog, hdc in each st across	(20 hdc)
☐ **Rows 41 to 42**	Repeat Rows 39 and 40, once more	(18 hdc)
	41 42	
☐ **Row 43**	Ch 1, turn; hdc in each st across to last 2 sts, hdc2tog	(17 hdc)
☐ **Row 44**	Ch 1, turn; hdc in each st across	(17 hdc)
☐ **End**	The 17 sts left are the shoulder. Fasten off.	

For your own crochet, gifts and handmade pieces you sell. Do not resell or share this PDF or copies of it.

Sleeve: make 2

Yarn A, cream.

☐ **Foundation**	The foundation chain is the top edge of the sleeve, which is sewn to the body: the sleeve is worked from there down to the wrist. With yarn A, ch 41. Colors: rows 1 to 3 yarn A; rows 4 to 6 yarn B; rows 7 to 28 yarn A.	
☐ **Row 1 (RS)**	Hdc in 2nd ch from hook and in each ch across	(40 hdc)
☐ **Rows 2 to 27**	Ch 1, turn; hdc in each st across	(40 hdc)

2 3 4 5 6 7 8 9 10 11 12 13 14 15 16 17 18 19 20 21 22 23 24 25 26 27

☐ **Row 28**	Ch 1, turn; hdc2tog 20 times	(20 hdc)
☐ **End**	The sleeve measures about 16 in (40.5 cm) across the top and 13¼ in (33.5 cm) long, without the cuff. Row 28 gathers it for the cuff. Fasten off.	

Neckband

Yarn A, cream.

☐ **Foundation**	Work this at step 2 of Assembly. With the right side facing, join yarn A in the first open st of the back neck, at the right shoulder seam (as worn); ch 1, sc in each of the 22 open sts of the back neck, sc in the end of each of the 7 rows down the left side of the neck, with 2 sc in the 4th of them (8 sc), sc in each of the 12 sts left at the front, and sc in the end of each of the 7 rows up the right side of the neck, with 2 sc in the 4th of them (8 sc); 50 sc in all; join with sl st in first sc. This is rnd 1.	
☐ **Rnd 2**	Ch 2; dc in each st around; join with sl st in first dc	(50 dc)
☐ **Rnd 3**	Ch 2; **[**fpdc around next st, bpdc around next st**] 25 times**; join with sl st in first fpdc	(25 fpdcs, 25 bpdcs)
☐ **End**	Fasten off.	

Hem

Yarn A, cream.

☐ **Foundation**	Work this at step 6 of Assembly. With the right side facing and the foundation chains of the body uppermost, join yarn A in the first ch of the front after the right side seam (as worn); ch 1, sc in each of the 56 chs of the front and in each of the 56 chs of the back, along their free side (112 sc; the ch that was skipped at the start of row 1 of each piece lies in a seam and is not worked); join with sl st in first sc. This is rnd 1.	
☐ **Rnd 2**	Ch 2; dc in each st around; join with sl st in first dc	(112 dc)
☐ **Rnds 3 to 5**	Ch 2; **[**fpdc around next st, bpdc around next st**] 56 times**; join with sl st in first fpdc	(56 fpdcs, 56 bpdcs)

3 4 5

☐ **End**	The hem is about 3 in (7.5 cm) deep. Fasten off.	

For your own crochet, gifts and handmade pieces you sell. Do not resell or share this PDF or copies of it.

Cuff: make 2

Yarn A, cream.

☐ **Foundation**	Work this at step 7 of Assembly. With the right side facing and row 28 of a sleeve uppermost, join yarn A in the first st after the sleeve seam; ch 1, sc in each of the 20 sts of row 28 (20 sc); join with sl st in first sc. This is rnd 1.
☐ **Rnd 2**	Ch 2; dc in each st around; join with sl st in first dc (20 dc)
☐ **Rnds 3 to 6**	Ch 2; **[**fpdc around next st, bpdc around next st**] 10 times**; join with sl st in first fpdc (10 fpdcs, 10 bpdcs)
	3 4 5 6
☐ **End**	The cuff is about 3¾ in (9.5 cm) deep. Fasten off.

Assembly

1. Shoulders: lay the front on the back with right sides together. Sew the 17 sts of each shoulder of the front to the 17 sts at that end of the top edge of the back. The middle 22 sts of the back stay open for the neck.

2. Neckband: work it now, as written above.

3. Markers: at each side edge of the back and of the front, place a marker in the end of row 28. The 17 rows from the marker to the shoulder seam, about 8 in (20.5 cm), are half of the armhole.

4. Sleeves: The top edge of a sleeve is its foundation chain (the ch that was skipped at the start of row 1 lies in the seam). With right sides together, put the middle of the top edge of a sleeve at a shoulder seam and its two ends at the markers. Sew the top edge on: 20 chs of the sleeve to the 17 row ends of the front, and the other 20 chs to the 17 row ends of the back, about 7 chs to every 6 row ends.

5. Sides and sleeves: fold the sweater at the shoulders, right sides together. Sew each sleeve seam from row 28 of the sleeve to the underarm, and go on down the side seam, row end to row end, to the foundation chains. Turn the sweater right side out.

6. Hem: work it now, as written above.

7. Cuff: work one on each sleeve now, as written above.

Finishing

- Weave in all the ends. Wash as the yarn label says and lay flat to the measurements to dry.

Found a mistake in this pattern? Tell us at flossfield.com, under Make a request.

For your own crochet, gifts and handmade pieces you sell. Do not resell or share this PDF or copies of it.