Top-down raglan cardigan

M, to fit bust 37 in (94 cm) · US terms



Finished size
About 42 in (106.5 cm) at the bust and about 23½ in (59.5 cm) long
To fit a bust of 37 in (94 cm)

Skill
Easy
Basic stitches and simple shaping, in one piece from the neck down

Yarn
Medium (4), 2 colors

Hook
5.5 mm (US I-9)

Gauge
13 stitches and 7 rows to 4 in (10 cm)
In double crochet (UK treble).

What you need

Yarn A: fern, main color **about 825 yd (754 m), an estimate**
Yarn B: cream, contrast **about 165 yd (151 m), an estimate**

By weight: about 500 g in all, an estimate, where 100 g is 200 yd (183 m).

Hook: 5.5 mm (US I-9), or the size that gives you the gauge. Also: yarn needle, scissors, tape measure, 5 buttons, ¾ in (20 mm) across and sewing thread and a sewing needle.

To find how many balls: divide by the length on your yarn's label and round up. Buy them from one dye lot. The estimate is from the stitches of this size at this gauge.

Sizes

Size	To fit bust	Yarn, an estimate	Bust (buttoned)	Length from the neckband	Yoke depth	Sleeve from the underarm	Upper sleeve	Neck around (buttoned)
XS	29 in (73.5 cm)	about 850 yd (777 m)	34½ in (87.5 cm)	22¼ in (56.5 cm)	8 in (20.5 cm)	17¼ in (44 cm)	13 in (33 cm)	22¼ in (56.5 cm)
S	33 in (84 cm)	about 905 yd (828 m)	38¼ in (97 cm)	22¾ in (58 cm)	8½ in (21.5 cm)	17¾ in (45 cm)	13 in (33 cm)	21 in (53.5 cm)
M (this file)	**37 in (94 cm)**	**about 990 yd (905 m)**	**42 in (106.5 cm)**	**23½ in (59.5 cm)**	**9¼ in (23.5 cm)**	**17¾ in (45 cm)**	**14¼ in (36 cm)**	**22¼ in (56.5 cm)**
L	41 in (104 cm)	about 1,100 yd (1,006 m)	46¾ in (118.5 cm)	24 in (61 cm)	9¼ in (23.5 cm)	17¾ in (45 cm)	14¾ in (37.5 cm)	24¾ in (63 cm)
1X	45 in (114.5 cm)	about 1,210 yd (1,106 m)	50½ in (128.5 cm)	24½ in (62 cm)	9¾ in (25 cm)	17¾ in (45 cm)	16½ in (42 cm)	26 in (66 cm)

For your own crochet, gifts and handmade pieces you sell. Do not resell or share this PDF or copies of it.

2X	49 in (124.5 cm)	about 1,320 yd (1,207 m)	54¼ in (138 cm)	25¼ in (64 cm)	10¼ in (26 cm)	18¼ in (46.5 cm)	18½ in (47 cm)	28½ in (72.5 cm)
3X	53 in (134.5 cm)	about 1,425 yd (1,303 m)	58 in (147.5 cm)	25¾ in (65.5 cm)	10¾ in (27.5 cm)	18¼ in (46.5 cm)	19¾ in (50 cm)	29¾ in (75.5 cm)
4X	57 in (145 cm)	about 1,625 yd (1,486 m)	62¾ in (159.5 cm)	26¾ in (68 cm)	11½ in (29 cm)	18¾ in (47.5 cm)	21½ in (54.5 cm)	32 in (81.5 cm)
5X	61 in (155 cm)	about 1,700 yd (1,554 m)	66½ in (169 cm)	27½ in (70 cm)	12 in (30.5 cm)	18¾ in (47.5 cm)	22¼ in (56.5 cm)	32 in (81.5 cm)

Schematic

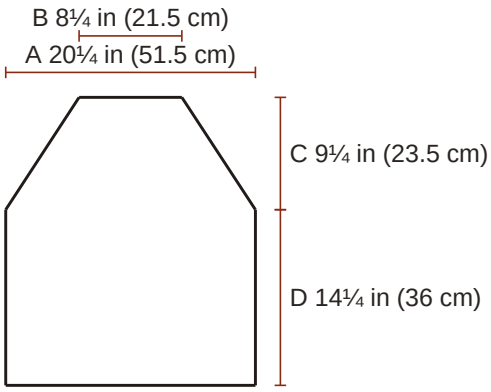

Body, laid flat
A half the bust, without the front bands
B across the neck opening
C the yoke
D below the yoke

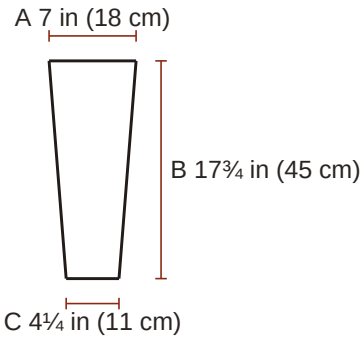

Sleeve, laid flat
A half the top of the sleeve
B the sleeve
C half the cuff

Gauge

13 stitches and 7 rows to 4 in (10 cm) in double crochet.

> **The swatch.** A test piece to measure and pull out. It is not the start of the pattern. Ch 22; begin in the 3rd ch from the hook and work 10 rows of double crochet on 20 sts, about 6¼ in (16 cm) wide and 5¾ in (14.5 cm) high, and measure 4 in (10 cm) in the middle. Use a larger hook if your swatch is small, a smaller one if it is large.

Notes

- The finished bust is from 5 in (12.5 cm) to 5¾ in (14.5 cm) wider than the body measurement, by the size. Choose by the finished measurement you like; no fit is promised beyond the measurements given.
- Worked from the neck down in one piece. The yoke and body are worked back and forth in rows; row 1 is a right side row. The sleeves are worked in rounds.
- The chain at the start of a round or row (ch 1 for single crochet, ch 2 for double crochet) never counts as a stitch. Work the first stitch into the stitch at its base.
- A ch-1 sp marks each of the four raglan lines. The ch-1 sps are counted apart from the stitches.
- A decrease counts as one stitch.

For your own crochet, gifts and handmade pieces you sell. Do not resell or share this PDF or copies of it.

- At the underarms, work into each of the new chains as into a stitch on the next row. The sleeves are worked into the free side of these chains.
- Stitches worked evenly along row ends: about 13 sc in every 7 rows.
- For the rib, always work around the post (the upright part) of the stitch below, not into its top.
- Color changes in rows: work the last yarn over of the last stitch of the row before with the new yarn. Cut the old yarn, leaving an end of about 6 in (15 cm), or, if it is needed again at the same edge within 6 rows and that edge is straight, carry it loosely up the edge.
- Color changes in rounds: work the sl st that joins the round before with the new yarn. Cut the old yarn, leaving an end of about 6 in (15 cm), or, if it is needed again within 6 rnds, carry it loosely up the inside at the join.

Instructions

M, to fit bust 37 in (94 cm). US terms.

ch chain, **sl st** slip stitch, **sc** single crochet (UK double crochet), **dc** double crochet (UK treble), **Rnd** round, **st** stitch, **sp** space.

RS right side, the one that shows, **WS** wrong side, the back.

ch-1 sp: the gap under the one chain; the hook goes in the gap.

[ ] 4 times: work what is inside 4 times in all. **( )**: all of it goes into the one place.

(68 dc): the stitches you have when the row is done. **How to read a pattern**.

Special stitches

dc2tog (double crochet 2 stitches together (UK treble 2 together)): [yarn over, insert the hook in the next stitch and pull up a loop, yarn over and pull through 2 loops] twice (3 loops on the hook); yarn over and pull through all 3 loops.

fpdc (front post double crochet (UK front post treble)): Yarn over, insert the hook from the front to the back and to the front again around the post of the stitch named, pull up a loop, [yarn over and pull through 2 loops] twice. The front is the side that faces you. A post stitch takes the place of the stitch it is worked around: do not work into the top of that stitch as well.

bpdc (back post double crochet (UK back post treble)): As fpdc, but insert the hook from the back to the front and to the back again around the post.

Yoke

Yarn A, fern.

☐ **Foundation**	With yarn A, ch 70.	
☐ **Row 1 (RS)**	Dc in 3rd ch from hook and in each ch across	(68 dc)
☐ **Row 2 (WS)**	Ch 2, turn; dc in next 12 sts, ch 1, dc in next 10 sts, ch 1, dc in next 24 sts, ch 1, dc in next 10 sts, ch 1, dc in next 12 sts	(68 dc, 4 ch-1 sps)
☐ **Row 3**	Ch 2, turn; [dc in each st to next ch-1 sp, (2 dc, ch 1, dc) in next ch-1 sp, dc in each st to next ch-1 sp, (dc, ch 1, 2 dc) in next ch-1 sp] twice, dc in each st across	(80 dc, 4 ch-1 sps)
☐ **Rows 4 to 6** 4 5 6	Ch 2, turn; **[**dc in each st to next ch-1 sp, (dc, ch 1, dc) in next ch-1 sp**] 4 times**, dc in each st across	(104 dc; 4 ch-1 sps)
☐ **Rows 7 to 10** 7 8 9 10	Repeat Rows 3 to 6, once more	(140 dc, 4 ch-1 sps)

For your own crochet, gifts and handmade pieces you sell. Do not resell or share this PDF or copies of it.

☐ **Row 11**	Ch 2, turn; **[**dc in each st to next ch-1 sp, (dc, ch 1, dc) in next ch-1 sp**] 4 times**, dc in each st across	(148 dc, 4 ch-1 sps)
☐ **Row 12**	Ch 2, turn; [dc in each st to next ch-1 sp, (2 dc, ch 1, dc) in next ch-1 sp, dc in each st to next ch-1 sp, (dc, ch 1, 2 dc) in next ch-1 sp] twice, dc in each st across	(160 dc, 4 ch-1 sps)
☐ **Rows 13 to 15**	Ch 2, turn; **[**dc in each st to next ch-1 sp, (dc, ch 1, dc) in next ch-1 sp**] 4 times**, dc in each st across	(184 dc; 4 ch-1 sps)
13 14 15		
☐ **Row 16**	Ch 2, turn; [dc in each st to next ch-1 sp, (2 dc, ch 1, dc) in next ch-1 sp, dc in each st to next ch-1 sp, (dc, ch 1, 2 dc) in next ch-1 sp] twice, dc in each st across	(196 dc, 4 ch-1 sps)
☐ **End**	Do not fasten off.	

Body

Yarn A, fern.

☐ **Foundation**	Go on from row 16 of the yoke. Colors: rows 17 to 37 yarn A; rows 38 to 41 yarn B.	
☐ **Row 17**	Ch 2, turn; dc in each st to next ch-1 sp, ch 6 (underarm), skip next ch-1 sp, next 38 sts and next ch-1 sp (one sleeve), dc in each st to next ch-1 sp, ch 6 (underarm), skip next ch-1 sp, next 38 sts and next ch-1 sp (one sleeve), dc in each st across	(120 dc, 12 ch)
☐ **Rows 18 to 38**	Ch 2, turn; dc in each st across	(132 dc)
18 19 20 21 22 23 24 25 26 27 28 29 30 31 32 33 34 35 36 37 38		
☐ **Rows 39 to 41**	Ch 2, turn; **[**fpdc around next st, bpdc around next st**] 66 times**	(66 fpdcs, 66 bpdcs)
39 40 41		
☐ **End**	Fasten off.	

Sleeve: make 2

Yarn A, fern.

☐ **Foundation**	Colors: rnds 1 to 27 yarn A; rnds 28 to 31 yarn B. With the right side facing, join yarn A in the left one of the two middle chs of an underarm; ch 2, dc in that ch and in each of the next 2 underarm chs, dc in the ch-1 sp, dc in each of the 38 sleeve sts, dc in the next ch-1 sp and dc in each of the 3 underarm chs left (46 dc); join with sl st in first dc. This is rnd 1.	
☐ **Rnd 2**	Ch 2; dc in each st around; join with sl st in first dc	(46 dc)
☐ **Rnd 3**	Ch 2; dc2tog, dc in each st around to last 2 sts, dc2tog; join with sl st in first dc2tog	(44 dc)
☐ **Rnds 4 to 19**	Repeat Rnds 2 and 3, 8 more times (42, 40, 38, 36, 34, 32, 30, 28 dc at the ends of the repeats)	(28 dc)
4 5 6 7 8 9 10 11 12 13 14 15 16 17 18 19		
☐ **Rnds 20 to 28**	Ch 2; dc in each st around; join with sl st in first dc	(28 dc)
20 21 22 23 24 25 26 27 28		

For your own crochet, gifts and handmade pieces you sell. Do not resell or share this PDF or copies of it.

☐ **Rnds 29 to 31** 29 30 31	Ch 2; **[**fpdc around next st, bpdc around next st**] 14 times**; join with sl st in first fpdc	(14 fpdcs, 14 bpdcs)
☐ **End**	Fasten off.	

Neckband

Yarn B, cream.

☐ **Foundation**	With the right side facing, join yarn B in the end of the foundation chain at the right front; ch 1, sc in each ch across (68 sc). This is row 1.	
☐ **Rows 2 to 3** 2 3	Ch 1, turn; sc in each st across	(68 sc)
☐ **End**	Fasten off.	

Button band

Yarn B, cream.

☐ **Foundation**	With the right side facing, join yarn B at the neck end of the left front edge (as worn); ch 1, sc in the end of each of the 3 neckband rows, 71 sc evenly down the 38 row ends of the front above the rib and 2 sc in the end of each of the 3 rib rows (80 sc). This is row 1.	
☐ **Rows 2 to 5** 2 3 4 5	Ch 1, turn; sc in each st across	(80 sc)
☐ **End**	Fasten off.	

Buttonhole band

Yarn B, cream.

☐ **Foundation**	With the right side facing, join yarn B at the hem of the right front edge (as worn); ch 1, 2 sc in the end of each of the 3 rib rows, 71 sc evenly up the 38 row ends of the front above the rib and sc in the end of each of the 3 neckband rows (80 sc). This is row 1.	
☐ **Row 2**	Ch 1, turn; sc in each st across	(80 sc)
☐ **Row 3**	Ch 1, turn; sc in next 3 sts, **[**ch 2, skip next 2 sts, sc in next 16 sts**] 4 times**, ch 2, skip next 2 sts, sc in next 3 sts	(70 sc, 5 ch-2 sps)
☐ **Row 4**	Ch 1, turn; sc in next 3 sts, **[**2 sc in next ch-2 sp, sc in next 16 sts**] 4 times**, 2 sc in next ch-2 sp, sc in next 3 sts	(80 sc)
☐ **Row 5**	Ch 1, turn; sc in each st across	(80 sc)
☐ **End**	Fasten off.	

Putting it together

Close any small gaps at the underarms with the yarn ends there. Sew the buttons to the button band opposite the buttonholes, with the sewing thread.

Finishing

- Weave in all the ends. Wash as the yarn label says and lay flat to the measurements to dry.

Found a mistake in this pattern? Tell us at flossfield.com, under Make a request.

For your own crochet, gifts and handmade pieces you sell. Do not resell or share this PDF or copies of it.