Top-down raglan sweater

Size M · US terms



Finished size
About 39½ in (100.5 cm) at the bust and about 22¾ in (58 cm) long
To fit a bust of 37 in (94 cm)

Skill
Easy
Basic stitches and simple shaping, in one piece from the neck down.

Yarn
Medium (4)

Hook
5.5 mm (US I-9)

Gauge
13 stitches and 7 rounds to 4 in (10 cm)
In double crochet.

You will need

Yarn: denim, medium (4) **about 925 yd (846 m), an estimate**

Hook: 5.5 mm (US I-9). Also: yarn needle, scissors and tape measure.

To find how many balls: divide by the length on your yarn's label and round up. The estimate is from the stitches of this size at this gauge.

Sizes

Size	To fit bust	Bust	Length	Yoke depth	Sleeve	Upper sleeve	Neck	Yarn, an estimate
XS	29 in (73.5 cm)	32 in (81.5 cm)	21¾ in (55 cm)	7½ in (19 cm)	17¼ in (44 cm)	13 in (33 cm)	22¼ in (56.5 cm)	about 775 yd (709 m)
Size S	33 in (84 cm)	35¾ in (91 cm)	22¼ in (56.5 cm)	8 in (20.5 cm)	17¾ in (45 cm)	13 in (33 cm)	21 in (53.5 cm)	about 825 yd (754 m)
Size M (this file)	**37 in (94 cm)**	**39½ in (100.5 cm)**	**22¾ in (58 cm)**	**8½ in (21.5 cm)**	**17¾ in (45 cm)**	**14¼ in (36 cm)**	**21 in (53.5 cm)**	**about 925 yd (846 m)**
Size L	41 in (104 cm)	44¼ in (112.5 cm)	23½ in (59.5 cm)	8½ in (21.5 cm)	17¾ in (45 cm)	14¾ in (37.5 cm)	23½ in (59.5 cm)	about 1,025 yd (937 m)
1X	45 in (114.5 cm)	48 in (122 cm)	24 in (61 cm)	9¼ in (23.5 cm)	17¾ in (45 cm)	16½ in (42 cm)	24½ in (62 cm)	about 1,125 yd (1,029 m)

For your own crochet, gifts and handmade pieces you sell. Do not resell or share this PDF.

2X	49 in (124.5 cm)	51¾ in (131.5 cm)	24½ in (62 cm)	9¾ in (25 cm)	18¼ in (46.5 cm)	18½ in (47 cm)	27 in (68.5 cm)	about 1,225 yd (1,120 m)
3X	53 in (134.5 cm)	56½ in (143.5 cm)	25¼ in (64 cm)	10¼ in (26 cm)	18¼ in (46.5 cm)	19¾ in (50 cm)	28¼ in (72 cm)	about 1,350 yd (1,234 m)
4X	57 in (145 cm)	60¼ in (153 cm)	26¼ in (66.5 cm)	10¾ in (27.5 cm)	18¾ in (47.5 cm)	21½ in (54.5 cm)	30¾ in (78 cm)	about 1,500 yd (1,372 m)
5X	61 in (155 cm)	64 in (162.5 cm)	26¾ in (68 cm)	11½ in (29 cm)	18¾ in (47.5 cm)	22¼ in (56.5 cm)	30¾ in (78 cm)	about 1,600 yd (1,463 m)

Schematic

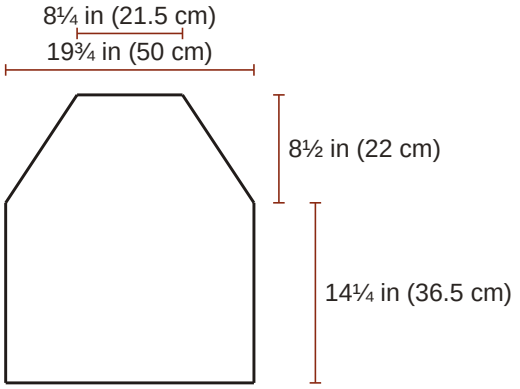

Body, laid flat

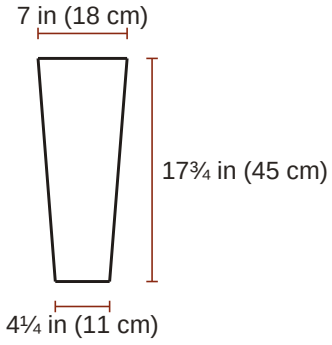

Sleeve, laid flat

Abbreviations

Written in US terms. Where the UK name differs it is given beside the US one.

ch chain
sl st slip stitch (UK ss, slip stitch)
sc single crochet (UK dc, double crochet)
dc double crochet (UK tr, treble)
sp space
st stitch
rnd round

Special stitches

dc2tog (double crochet 2 stitches together (UK treble 2 together)): [Yarn over, insert the hook in the next stitch and pull up a loop, yarn over and pull through 2 loops] twice (3 loops on the hook); yarn over and pull through all 3 loops. It leaves 1 dc2tog for the next row.

fpdc (front post double crochet (UK front post treble)): Yarn over, insert the hook from the front to the back and to the front again around the post of the stitch named, pull up a loop, [yarn over and pull through 2 loops] twice. The front is the side that faces you. A post stitch takes the place of the stitch it is worked around: do not work into the top of that stitch as well. It leaves 1 fpdc for the next row.

bpdc (back post double crochet (UK back post treble)): As fpdc, but insert the hook from the back to the front and to the back again around the post. It leaves 1 bpdc for the next row.

For your own crochet, gifts and handmade pieces you sell. Do not resell or share this PDF.

Gauge

13 stitches and 7 rounds to 4 in (10 cm) in double crochet.

> **The swatch.** A test piece to measure and pull out. It is not the start of the pattern. Ch 22; begin in the 3rd ch from the hook and work 10 rows of double crochet on 20 sts, about 6¼ in (16 cm) wide and 5¾ in (14.5 cm) high, and measure 4 in (10 cm) in the middle. Use a larger hook if your swatch is small, a smaller one if it is large.

Before you start

- Women's sizes.
- The finished bust is from 2½ in (6.5 cm) to 3½ in (9 cm) wider than the body measurement, by the size. Choose by the finished measurement you like; no fit is promised beyond the measurements given.
- Worked from the neck down in one piece. The rounds are not turned; the right side always faces you.
- The rounds begin at the middle of the back, so the first and the last section of each round are the two halves of the back.
- Work the foundation chain and the neckband loosely: the neck has no opening and must go over the head.
- The chain at the start of a round or row (ch 1 for single crochet, ch 2 for double crochet) never counts as a stitch. Work the first stitch into the stitch at its base.
- A ch-1 sp marks each of the four raglan lines. The ch-1 sps are counted apart from the stitches.
- A decrease counts as one stitch.
- At the underarms, work into each of the new chains as into a stitch on the next round. The sleeves are worked into the free side of these chains.
- For the rib, always work around the post (the upright part) of the stitch below, not into its top.

Instructions

Chosen: Size M. Square brackets [ ] hold a repeat: work what is inside as many times as it says. Round brackets ( ) inside a line hold stitches that all go into one place. The count in round brackets at the end of a line is what that line leaves. Tick the box when a round is done. In UK terms sl st is slip stitch, sc is double crochet and dc is treble.

Yoke

☐ **Foundation**	Ch 68; join with sl st in first ch to form a ring, taking care not to twist the chain.	
☐ **Rnd 1**	Ch 2; dc in next 12 chs, ch 1, dc in next 10 chs, ch 1, dc in next 24 chs, ch 1, dc in next 10 chs, ch 1, dc in next 12 chs; join with sl st in first dc	**(68 dc, 4 ch-1 sps)**
☐ **Rnd 2**	Ch 2; [dc in each st to next ch-1 sp, (2 dc, ch 1, dc) in next ch-1 sp, dc in each st to next ch-1 sp, (dc, ch 1, 2 dc) in next ch-1 sp] twice, dc in each st around; join with sl st in first dc	**(80 dc, 4 ch-1 sps)**
☐ **Rnd 3**	Ch 2; **[**dc in each st to next ch-1 sp, (dc, ch 1, dc) in next ch-1 sp**] 4 times**, dc in each st around; join with sl st in first dc	**(88 dc, 4 ch-1 sps)**
☐ **Rnd 4**	Ch 2; **[**dc in each st to next ch-1 sp, (dc, ch 1, dc) in next ch-1 sp**] 4 times**, dc in each st around; join with sl st in first dc	**(96 dc, 4 ch-1 sps)**

For your own crochet, gifts and handmade pieces you sell. Do not resell or share this PDF.

☐ **Rnd 5**	Ch 2; **[**dc in each st to next ch-1 sp, (dc, ch 1, dc) in next ch-1 sp**] 4 times**, dc in each st around; join with sl st in first dc	**(104 dc, 4 ch-1 sps)**
☐ **Rnd 6**	Ch 2; **[**dc in each st to next ch-1 sp, (dc, ch 1, dc) in next ch-1 sp**] 4 times**, dc in each st around; join with sl st in first dc	**(112 dc, 4 ch-1 sps)**
☐ **Rnd 7**	Ch 2; **[**dc in each st to next ch-1 sp, (dc, ch 1, dc) in next ch-1 sp**] 4 times**, dc in each st around; join with sl st in first dc	**(120 dc, 4 ch-1 sps)**
☐ **Rnd 8**	Ch 2; [dc in each st to next ch-1 sp, (2 dc, ch 1, dc) in next ch-1 sp, dc in each st to next ch-1 sp, (dc, ch 1, 2 dc) in next ch-1 sp] twice, dc in each st around; join with sl st in first dc	**(132 dc, 4 ch-1 sps)**
☐ **Rnd 9**	Ch 2; **[**dc in each st to next ch-1 sp, (dc, ch 1, dc) in next ch-1 sp**] 4 times**, dc in each st around; join with sl st in first dc	**(140 dc, 4 ch-1 sps)**
☐ **Rnd 10**	Ch 2; **[**dc in each st to next ch-1 sp, (dc, ch 1, dc) in next ch-1 sp**] 4 times**, dc in each st around; join with sl st in first dc	**(148 dc, 4 ch-1 sps)**
☐ **Rnd 11**	Ch 2; **[**dc in each st to next ch-1 sp, (dc, ch 1, dc) in next ch-1 sp**] 4 times**, dc in each st around; join with sl st in first dc	**(156 dc, 4 ch-1 sps)**
☐ **Rnd 12**	Ch 2; **[**dc in each st to next ch-1 sp, (dc, ch 1, dc) in next ch-1 sp**] 4 times**, dc in each st around; join with sl st in first dc	**(164 dc, 4 ch-1 sps)**
☐ **Rnd 13**	Ch 2; **[**dc in each st to next ch-1 sp, (dc, ch 1, dc) in next ch-1 sp**] 4 times**, dc in each st around; join with sl st in first dc	**(172 dc, 4 ch-1 sps)**
☐ **Rnd 14**	Ch 2; **[**dc in each st to next ch-1 sp, (dc, ch 1, dc) in next ch-1 sp**] 4 times**, dc in each st around; join with sl st in first dc	**(180 dc, 4 ch-1 sps)**
☐ **Rnd 15**	Ch 2; [dc in each st to next ch-1 sp, (2 dc, ch 1, dc) in next ch-1 sp, dc in each st to next ch-1 sp, (dc, ch 1, 2 dc) in next ch-1 sp] twice, dc in each st around; join with sl st in first dc	**(192 dc, 4 ch-1 sps)**
☐ **End**	Do not fasten off.	

Body

☐ **Foundation**	Go on from rnd 15 of the yoke.	
☐ **Rnd 16**	Ch 2; dc in each st to next ch-1 sp, ch 6 (underarm), skip next ch-1 sp, next 38 sts and next ch-1 sp (one sleeve), dc in each st to next ch-1 sp, ch 6 (underarm), skip next ch-1 sp, next 38 sts and next ch-1 sp (one sleeve), dc in each st around; join with sl st in first dc	**(116 dc, 12 ch)**
☐ **Rnds 17 to 37**	Ch 2; dc in each st around; join with sl st in first dc	**(128 dc)**

A box for each round, 17 to 37: tick them off as you go.

☐ 17 ☐ 18 ☐ 19 ☐ 20 ☐ 21 ☐ 22 ☐ 23 ☐ 24 ☐ 25 ☐ 26 ☐ 27 ☐ 28 ☐ 29 ☐ 30 ☐ 31 ☐ 32 ☐ 33 ☐ 34 ☐ 35 ☐ 36 ☐ 37

For your own crochet, gifts and handmade pieces you sell. Do not resell or share this PDF.

☐ **Rnds 38 to 40**	Ch 2; **[**fpdc around next st, bpdc around next st**] 64 times**; join with sl st in first fpdc	**(64 fpdcs, 64 bpdcs)**

A box for each round, 38 to 40: tick them off as you go.

38 39 40

☐ **End**	Fasten off.	

Sleeve: make 2

☐ **Foundation**	With the right side facing, join the yarn in the left one of the two middle chs of an underarm.	
☐ **Rnd 1**	Ch 2, dc in that ch and in each of the next 2 underarm chs, dc in the ch-1 sp, dc in each of the 38 sleeve sts, dc in the next ch-1 sp and dc in each of the 3 underarm chs left; join with sl st in first dc	**(46 dc)**
☐ **Rnd 2**	Ch 2; dc in each st around; join with sl st in first dc	**(46 dc)**
☐ **Rnd 3**	Ch 2; dc2tog, dc in each st around to last 2 sts, dc2tog; join with sl st in first dc2tog	**(44 dc)**
☐ **Rnd 4**	Ch 2; dc in each st around; join with sl st in first dc	**(44 dc)**
☐ **Rnd 5**	Ch 2; dc2tog, dc in each st around to last 2 sts, dc2tog; join with sl st in first dc2tog	**(42 dc)**
☐ **Rnd 6**	Ch 2; dc in each st around; join with sl st in first dc	**(42 dc)**
☐ **Rnd 7**	Ch 2; dc2tog, dc in each st around to last 2 sts, dc2tog; join with sl st in first dc2tog	**(40 dc)**
☐ **Rnd 8**	Ch 2; dc in each st around; join with sl st in first dc	**(40 dc)**
☐ **Rnd 9**	Ch 2; dc2tog, dc in each st around to last 2 sts, dc2tog; join with sl st in first dc2tog	**(38 dc)**
☐ **Rnd 10**	Ch 2; dc in each st around; join with sl st in first dc	**(38 dc)**
☐ **Rnd 11**	Ch 2; dc2tog, dc in each st around to last 2 sts, dc2tog; join with sl st in first dc2tog	**(36 dc)**
☐ **Rnd 12**	Ch 2; dc in each st around; join with sl st in first dc	**(36 dc)**
☐ **Rnd 13**	Ch 2; dc2tog, dc in each st around to last 2 sts, dc2tog; join with sl st in first dc2tog	**(34 dc)**
☐ **Rnd 14**	Ch 2; dc in each st around; join with sl st in first dc	**(34 dc)**
☐ **Rnd 15**	Ch 2; dc2tog, dc in each st around to last 2 sts, dc2tog; join with sl st in first dc2tog	**(32 dc)**
☐ **Rnd 16**	Ch 2; dc in each st around; join with sl st in first dc	**(32 dc)**
☐ **Rnd 17**	Ch 2; dc2tog, dc in each st around to last 2 sts, dc2tog; join with sl st in first dc2tog	**(30 dc)**
☐ **Rnd 18**	Ch 2; dc in each st around; join with sl st in first dc	**(30 dc)**
☐ **Rnd 19**	Ch 2; dc2tog, dc in each st around to last 2 sts, dc2tog; join with sl st in first dc2tog	**(28 dc)**
☐ **Rnds 20 to 28**	Ch 2; dc in each st around; join with sl st in first dc	**(28 dc)**

A box for each round, 20 to 28: tick them off as you go.

20 21 22 23 24 25 26 27 28

For your own crochet, gifts and handmade pieces you sell. Do not resell or share this PDF.

☐ **Rnds 29 to 31**	Ch 2; **[**fpdc around next st, bpdc around next st**] 14 times**; join with sl st in first fpdc	**(14 fpdcs, 14 bpdcs)**

A box for each round, 29 to 31: tick them off as you go.

29 30 31

☐ **End**	Fasten off.	

Neckband

☐ **Foundation**	With the right side facing, join the yarn in the foundation chain at the middle of the back.	
☐ **Rnd 1**	Ch 1, sc in each ch around; join with sl st in first sc	**(68 sc)**
☐ **Rnds 2 to 3**	Ch 1; sc in each st around; join with sl st in first sc	**(68 sc)**

A box for each round, 2 to 3: tick them off as you go.

2 3

☐ **End**	Fasten off.	

Putting it together

Close any small gaps at the underarms with the yarn ends there.

Finishing

- Weave in all the ends. Wash as the yarn label says and lay flat to the measurements to dry.

In all: 5 pieces; 8 ends to weave in.

Found a mistake in this pattern? Tell us at flossfield.com, under Make a request.

For your own crochet, gifts and handmade pieces you sell. Do not resell or share this PDF.