Chunky ribbed turtleneck sweater

M, to fit bust 37 in (94 cm) · US terms



Finished size
About 43 in (109 cm) at the bust and about 24 in (61 cm) long
To fit a bust of 37 in (94 cm)

Skill
Easy
Back loop ribs worked sideways, easy shaping and seams

Yarn
Bulky (5)

Hook
8 mm (US L-11)

Gauge
10 stitches and 8 rows to 4 in (10 cm)
In half double crochet rib.

What you need

Yarn: any one color (golden ochre in the picture), bulky (5) **about 1,250 yd (1,143 m), an estimate**
By weight: about 960 g, an estimate, where 100 g is 130 yd (119 m).

Hook: 8 mm (US L-11), or the size that gives you the gauge. Also: yarn needle, scissors, tape measure and stitch markers.

To find how many balls: divide by the length on your yarn's label and round up. Buy them from one dye lot. The estimate is from the stitches of this size at this gauge.

Sizes

Size	To fit bust	Yarn, an estimate	Bust	Length	Armhole depth	Sleeve	Upper sleeve	Cuff around	Back neck	Collar around	Collar depth, folded
XS	29 in (73.5 cm)	about 1,050 yd (960 m)	35 in (89 cm)	23½ in (59.5 cm)	7¼ in (18.5 cm)	17½ in (44.5 cm)	14½ in (37 cm)	7 in (18 cm)	7½ in (19 cm)	20 in (51 cm)	4½ in (11.5 cm)
S	33 in (84 cm)	about 1,150 yd (1,052 m)	39 in (99 cm)	23½ in (59.5 cm)	7½ in (19 cm)	17½ in (44.5 cm)	15½ in (39.5 cm)	7½ in (19 cm)	7½ in (19 cm)	20 in (51 cm)	4½ in (11.5 cm)
M (this file)	**37 in (94 cm)**	**about 1,250 yd (1,143 m)**	**43 in (109 cm)**	**24 in (61 cm)**	**8½ in (21.5 cm)**	**17¼ in (44 cm)**	**16½ in (42 cm)**	**8 in (20.5 cm)**	**7½ in (19 cm)**	**20 in (51 cm)**	**4½ in (11.5 cm)**
L	41 in (104 cm)	about 1,350 yd (1,234 m)	47 in (119.5 cm)	24½ in (62 cm)	8¾ in (22 cm)	17¼ in (44 cm)	17½ in (44.5 cm)	8 in (20.5 cm)	7½ in (19 cm)	20 in (51 cm)	4½ in (11.5 cm)
1X	45 in (114.5 cm)	about 1,425 yd (1,303 m)	51 in (129.5 cm)	24½ in (62 cm)	9¼ in (23.5 cm)	16¾ in (42.5 cm)	18½ in (47 cm)	8½ in (21.5 cm)	7½ in (19 cm)	20 in (51 cm)	4½ in (11.5 cm)

For your own crochet, gifts and handmade pieces you sell. Do not resell or share this PDF or copies of it.

2X	49 in (124.5 cm)	about 1,525 yd (1,394 m)	55 in (139.5 cm)	24¾ in (63 cm)	9½ in (24 cm)	16¾ in (42.5 cm)	19½ in (49.5 cm)	9 in (23 cm)	7½ in (19 cm)	20 in (51 cm)	4½ in (11.5 cm)
3X	53 in (134.5 cm)	about 1,600 yd (1,463 m)	59 in (150 cm)	24¾ in (63 cm)	10½ in (26.5 cm)	16 in (40.5 cm)	20½ in (52 cm)	9 in (23 cm)	7½ in (19 cm)	20 in (51 cm)	4½ in (11.5 cm)
4X	57 in (145 cm)	about 1,700 yd (1,554 m)	63 in (160 cm)	25¼ in (64 cm)	10¾ in (27.5 cm)	16 in (40.5 cm)	21½ in (54.5 cm)	9 in (23 cm)	7½ in (19 cm)	20 in (51 cm)	4½ in (11.5 cm)
5X	61 in (155 cm)	about 1,800 yd (1,646 m)	67 in (170 cm)	25½ in (65 cm)	11¼ in (28.5 cm)	15¼ in (38.5 cm)	22½ in (57 cm)	9½ in (24 cm)	7½ in (19 cm)	20 in (51 cm)	4½ in (11.5 cm)

Schematic

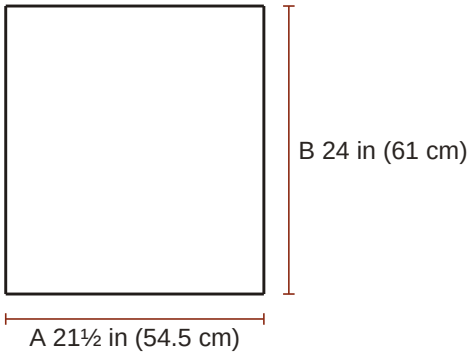

Back
A half the bust
B the length

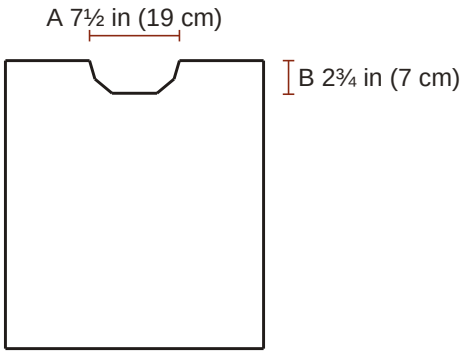

Front
A the neck
B how deep the neck is

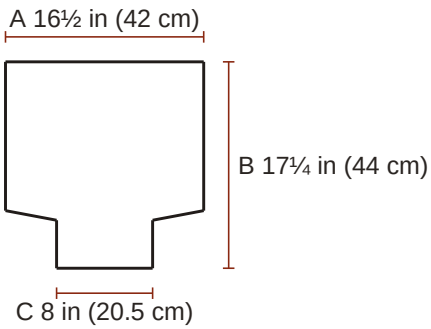

Sleeve (make 2)
A the top of the sleeve, opened flat
B the sleeve
C around the cuff

Gauge

10 stitches and 8 rows to 4 in (10 cm) in half double crochet rib.

> **The swatch.** A test piece to measure and pull out. It is not the start of the pattern. Ch 16; begin in the 2nd ch from the hook and work 12 rows of half double crochet rib on 15 sts, about 6 in (15 cm) wide and 6 in (15 cm) high, and measure 4 in (10 cm) in the middle. Use a larger hook if your swatch is small, a smaller one if it is large. Half double crochet rib (UK: half treble): row 1 in the chain, then every row in the back loop only.

For your own crochet, gifts and handmade pieces you sell. Do not resell or share this PDF or copies of it.

Notes

- The finished bust is 6 in (15 cm) wider than the body measurement at each size. Choose by the finished measurement you like; no fit is promised beyond the measurements given.
- The turning chain (ch 1 for half double crochet) never counts as a stitch. Work the first stitch of every row into the first stitch, at the base of the turning chain.
- Every piece is worked sideways in half double crochet in the back loop (UK: half treble): the rows become the upright ribs. Odd-numbered rows are right side rows. Mark the right side of each piece with a stitch marker.
- After the 3 chs that make the neck edge, ch 1 more and turn: the first hdc of the next row goes in the 2nd ch from the hook, the last of those chs. Work under the top loop of each ch; on the stitches go on in the back loop only.
- An increase (2 or 3 hdc in one st) is worked under both loops.
- Hdc2tog in back loops only: an hdc2tog with the hook in the back loop of each of the two stitches. A decrease counts as one stitch.
- Sew every seam with the yarn needle and the same yarn: cut a length about three times as long as the seam.
- In back loop only: insert the hook under the loop of the stitch that is farther from you, and leave the nearer loop free.

Instructions

M, to fit bust 37 in (94 cm). US terms.

ch chain, **hdc** half double crochet (UK half treble), **st** stitch.
RS right side, the one that shows.
(60 hdc): the stitches you have when the row is done. **How to read a pattern**.

Special stitches

hdc2tog (half double crochet 2 stitches together (UK half treble 2 together)): [yarn over, insert the hook in the next stitch and pull up a loop] twice (5 loops on the hook); yarn over and pull through all 5 loops.

Back

☐ **Foundation**	Row 1 begins at the lower edge: odd-numbered rows end at the top edge (shoulders and neck), and even-numbered rows begin there. Ch 61.	
☐ **Row 1 (RS)**	Hdc in 2nd ch from hook and in each ch across	(60 hdc)
☐ **Rows 2 to 43**	Ch 1, turn; hdc in back loop only of each st across	(60 hdc)

2 3 4 5 6 7 8 9 10 11 12 13 14 15 16 17 18 19 20 21 22 23 24 25 26 27 28 29
30 31 32 33 34 35 36 37 38 39 40 41 42 43

☐ **End**	The back measures about 21½ in (54.5 cm) wide, across the rows, and 24 in (61 cm) long, along the rows. Fasten off.	

Front

☐ **Foundation**	Row 1 begins at the lower edge: odd-numbered rows end at the neck and shoulder edge, and even-numbered rows begin there. Rows 1 to 14 are the right shoulder (as worn), rows 15 to 29 are the neck, and rows 30 to 43 are the left shoulder. Ch 61.	
☐ **Row 1 (RS)**	Hdc in 2nd ch from hook and in each ch across	(60 hdc)

For your own crochet, gifts and handmade pieces you sell. Do not resell or share this PDF or copies of it.

☐ **Rows 2 to 14**	Ch 1, turn; hdc in back loop only of each st across	(60 hdc)

2 3 4 5 6 7 8 9 10 11 12 13 14

☐ **Row 15**	Ch 1, turn; hdc in back loop only of next 57 sts, leave the last 3 sts unworked	(57 hdc)
☐ **Row 16**	Ch 1, turn; hdc2tog in back loops only twice, hdc in back loop only of each st across	(55 hdc)
☐ **Row 17**	Ch 1, turn; hdc in back loop only of each st across to last 2 sts, hdc2tog in back loops only	(54 hdc)
☐ **Row 18**	Ch 1, turn; hdc2tog in back loops only, hdc in back loop only of each st across	(53 hdc)
☐ **Rows 19 to 26**	Ch 1, turn; hdc in back loop only of each st across	(53 hdc)

19 20 21 22 23 24 25 26

☐ **Row 27**	Ch 1, turn; hdc in back loop only of each st across to last st, 2 hdc in last st	(54 hdc)
☐ **Row 28**	Ch 1, turn; 2 hdc in first st, hdc in back loop only of each st across	(55 hdc)
☐ **Row 29**	Ch 1, turn; hdc in back loop only of each st across to last st, 3 hdc in last st, ch 3 for the neck edge	(57 hdc, 3 ch)
☐ **Row 30**	Ch 1, turn; hdc in next 3 chs, hdc in back loop only of each st across	(60 hdc)
☐ **Rows 31 to 43**	Ch 1, turn; hdc in back loop only of each st across	(60 hdc)

31 32 33 34 35 36 37 38 39 40 41 42 43

☐ **End**	The front measures the same as the back; the neck is about 7½ in (19 cm) wide and 2¾ in (7 cm) deep. Fasten off.

Sleeve: make 2

☐ **Foundation**	Ch 34.	
☐ **Row 1 (RS)**	Hdc in 2nd ch from hook and in each ch across	(33 hdc)
☐ **Rows 2 to 33**	Ch 1, turn; hdc in back loop only of each st across	(33 hdc)

2 3 4 5 6 7 8 9 10 11 12 13 14 15 16 17 18 19 20 21 22 23 24 25 26 27 28 29 30 31 32 33

☐ **End**	The sleeve measures about 16½ in (42 cm) wide, across the rows, and 13¼ in (33.5 cm) long, along the rows. Both edges of row ends are the same: one is the top edge, the other is sewn to a cuff. Fasten off.

Cuff: make 2

☐ **Foundation**	Ch 11.	
☐ **Row 1 (RS)**	Hdc in 2nd ch from hook and in each ch across	(10 hdc)
☐ **Rows 2 to 16**	Ch 1, turn; hdc in back loop only of each st across	(10 hdc)

2 3 4 5 6 7 8 9 10 11 12 13 14 15 16

☐ **End**	The cuff measures about 8 in (20.5 cm) long, across the rows, and 4 in (10 cm) deep, along the rows. Fasten off.

For your own crochet, gifts and handmade pieces you sell. Do not resell or share this PDF or copies of it.

Collar

☐ **Foundation**	Ch 24.	
☐ **Row 1 (RS)**	Hdc in 2nd ch from hook and in each ch across	(23 hdc)
☐ **Rows 2 to 40**	Ch 1, turn; hdc in back loop only of each st across	(23 hdc)

2 3 4 5 6 7 8 9 10 11 12 13 14 15 16 17 18 19 20 21 22 23 24 25 26 27 28 29
30 31 32 33 34 35 36 37 38 39 40

☐ **End**	The collar measures about 20 in (51 cm) long and 9¼ in (23.5 cm) deep. Fasten off.	

Assembly

1. Shoulders: lay the front on the back with right sides together and the lower edges level, so that at each side the foundation chain of one piece lies on the last row of the other. Sew the 14 row ends of each shoulder of the front to the 14 row ends at that end of the top edge of the back. The 15 row ends in the middle of the back stay open for the neck. Turn the sweater right side out.

2. Collar: sew the 23 chs of the foundation chain of the collar to the 23 sts of its last row to make a ring. Slip the ring over the neck of the sweater, on its right side, with the ridge of the collar seam inside the ring, against the sweater, and at the left shoulder seam (as worn), and the upper edge of the ring level with the neck edge. Sew the two edges together, beginning at the left shoulder seam and going across the back neck first: 15 row ends of the collar to the 15 row ends of the back neck; 8 down the right side of the front neck (3 to the 3 sts that row 15 left unworked, 2 to the end of row 15, 2 to the end of row 16 and 1 to the end of row 17); 9 to the ends of rows 18 to 26 across the middle of the front; and 8 up the left side (1 to the end of row 27, 2 to the end of row 28, 2 to the end of row 29 and 3 to the free side of the 3 chs of the neck edge). Turn the collar up, away from the sweater: the ridge of its seam is now on the outside. Fold the upper half of the collar down to the outside: it covers the ridge.

3. Markers: the side edges of the body are the foundation chain and the last row of the back and of the front. On each of them count 21 sts, about 8½ in (21.5 cm), down from the shoulder seam and place a marker there.

4. Cuffs: with right sides together, sew the 16 row ends of one long edge of a cuff to the 33 row ends of the lower edge of a sleeve, so that the sleeve is gathered. Begin with the foundation chains of the two pieces level. Sew each row end of the cuff to the next 2 row ends of the sleeve, but the 9th row end of the cuff to the next 3 row ends of the sleeve (16 row ends of the cuff to 33 row ends of the sleeve).

5. Sleeves: with right sides together, put the end of row 17, the middle row of the 33 rows of a sleeve, at a shoulder seam, and the two ends of the top edge at the markers. Sew the top edge on: 16 row ends to the 21 sts of the front, and 16 row ends to the 21 sts of the back, with row 17 at the seam itself, about 4 sts to every 3 row ends.

6. Sides and sleeves: turn the sweater wrong side out and fold it at the shoulders, right sides together. Sew each sleeve seam from the edge of the cuff to the underarm: the 10 chs of the cuff to the 10 sts of its last row, then the 33 chs of the sleeve to the 33 sts of its last row. Go on down the side seam, the 39 sts of the last row of one piece to the 39 chs of the foundation chain of the other, below the markers, to the lower edge.

Finishing

- Weave in all the ends. Wash as the yarn label says and lay flat to the measurements to dry.

In all: 6 pieces; 8,490 stitches (2,580 in the back, 2,492 in the front, 1,089 in each sleeve, 160 in each cuff, 920 in the collar).

Found a mistake in this pattern? Tell us at flossfield.com, under Make a request.

For your own crochet, gifts and handmade pieces you sell. Do not resell or share this PDF or copies of it.